WWW.SOLENOIDVALVE.CN WWW.SANLIXIN.COM

Sanlixin®

SOLENOID VALVES

YUYAO SANLIXIN SOLENOID VALVE CO.,LTD.

三力信®
Sanlixin®

SANLIXIN

SOLENOID VALVE

YUYAO SANLIXIN SOLENOID VALVE CO.,LTD.

高新技术企业

National High-tech Enterprise



2026

About Sanlixin

Brief Introduction

Yuyao Sanlixin Solenoid Valve Co., Ltd. specializes in the design and manufacture of all kinds of fluid solenoid valves and other automatic control valves, high-tech enterprises, specialized "little giant" enterprises, well-known firms in Zhejiang Province, It has more than 80 patents for invention and utility models of solenoid valves. It has cooperated with University of Zhejiang for professional research, and has Sanlixin Product R&D Center of Zhejiang University Huanjiang Laboratory. Ningbo Sanlixin Industrial Solenoid Valve Engineering (Technology) Center.

Since 1993. it has more than 100 series, 10,000 kinds of specifications types widely used in a variety of media in the pipeline automatic control. Product flow diameter from DN0.1 to DN150mm, operating pressure from vacuum to 1050 bar, body and seal available in a variety of materials. The company has been committed to the development of new products, with water, gas, high pressure, high temperature and other media and pressure of all kinds of solenoid valve test engineering system. The company has passed ISO9001 quality management system certification, ISO14000 environmental management system certification, ISO45000 Occupational health and safety management system certification and intellectual property management system certification. Some products have passed the European TÜV, CE WRAS NSF UL certification, etc. China Ex explosion-proof 3C certification.

The company has basically established the Sanlixin product marketing network in the world, established 13 sales centers in China and established sales centers in 10 countries overseas. The company engineers can provide you with pre-sales and after-sales service, and can design and customize all kinds of fluid solenoid valve products professionally.

The company adheres to the business purpose of "technology first, quality oriented, customer oriented, create excellent brand", constantly meet customer requirements, seek common development, and serve global users.

HIGH QUALITY ***BEST SERVICE***

Enterprise Honor







三力信 Sanlixin®

New factory covering 32000 square meters









三力信 Sanlixin®

Patent Certificate & Quality certificate

Sanlixin Solenoid Valve



证书号第2596672号

发明专利证书

发明名称：安全的检测蒸汽电磁阀的方法

发明人：毛杉海,顾国云

专利号：ZL 2014 1 0726908.0

专利申请日：2014年12月03日

专利权人：余姚市三力信电磁阀有限公司

授权公告日：2017年08月25日

局长 申长雨



证书号第3075911号

发明专利证书

发明名称：一种检测水气电磁阀综合性能的方法

发明人：毛杉海,顾国云

专利号：ZL 2016 1 0109550.0

专利申请日：2016年02月26日

专利权人：余姚市三力信电磁阀有限公司

地址：315400 浙江省宁波市余姚市虹桥路9号

授权公告日：2018年09月18日 授权公告号：CN 105606355 B

局长 申长雨



证书号第3076081号

发明专利证书

发明名称：一种安全的检测高压电磁阀的方法

发明人：毛杉海,顾国云

专利号：ZL 2016 1 0156379.4

专利申请日：2016年03月17日

专利权人：余姚市三力信电磁阀有限公司

地址：315400 浙江省宁波市余姚市虹桥路9号

授权公告日：2018年09月18日 授权公告号：CN 105571794 B

局长 申长雨



NSF International

789 N. Dixboro Road, Ann Arbor, MI 48105 USA

RECOGNIZES

Yuyao Sanlixin Solenoid Valve Co., Ltd.

Facility: Zhejiang, China

AS COMPLYING WITH NSF/ANSI 61, 372 AND ALL APPLICABLE REQUIREMENTS.
PRODUCTS APPEARING IN THE NSF OFFICIAL LISTING ARE
AUTHORIZED TO BEAR THE NSF MARK.

September 22, 2017
Certificate# C0138751 - 01

David Purkiss
General Manager, Plumbing



NSF International

789 N. Dixboro Road, Ann Arbor, MI 48105 USA

RECOGNIZES

Yuyao Sanlixin Solenoid Valve Co., Ltd.

China

AS COMPLYING WITH NSF/ANSI 61, 372 AND ALL APPLICABLE REQUIREMENTS.
PRODUCTS APPEARING IN THE NSF OFFICIAL LISTING ARE
AUTHORIZED TO BEAR THE NSF MARK.

September 22, 2017
Certificate# C0138750 - 01

David Purkiss
General Manager, Plumbing



CERTIFICATE OF COMPLIANCE

Certificate Number 20190730-MH63799
Report Reference MH63799-20190730
Issue Date 2019-JULY-30

Issued to: Yuyao Sanlixin Solenoid Valve Co Ltd
No 9 Hongqiao Rd, Yuyao
Ningbo
Zhejiang 315400 China

This certificate confirms that representative samples of: Component - Valve Parts, Electrically Operated Coil Assembly, Series D04, Type Numbers: D04-3101U, D04-3102U, D04-3104U, D04-3106U, D04-3107U, D04-31011U and D04-31013U.

Have been investigated by UL in accordance with the component requirements in the Standard(s) indicated on this Certificate. UL Recognized components are incomplete in certain constructional features or restricted in performance capabilities and are intended for installation in complete equipment submitted for investigation to UL LLC.

Standard(s) for Safety: UL 429, Electrically Operated Valves
Additional Information: See the UL Online Certifications Directory at https://iq.ulprospector.com for additional information.

This Certificate of Compliance does not provide authorization to apply the UL Recognized Component Mark. Only the UL Follow-Up Services Procedure provides authorization to apply the UL Mark.

Only those products bearing the UL Recognized Component Mark should be considered as being UL Certified and covered under UL's Follow-Up Services.

Look for the UL Recognized Component Mark on the product.

Page 1 of 1



WRAS

WRAS PRODUCT APPROVAL CERTIFICATE

Approval Number
260512701

Field of application: Products complying with the Water Supply (Water Fittings) Regulations 1999 (England & Wales), the Water Supply (Water Fittings) (Scotland) Byelaws 2014 and the Water Supply (Water Fittings) Regulations (Northern Ireland) 2009.

Approval holder: Yuyao Sanlixin Solenoid Valve Co., Ltd.

WRAS directory section: 2230

Product type: Valves
Solenoid, metal.

Model: *WSLP1DF-XX-E1-XX-03-X,
WSLP1DF-XX-E1-XX-XX-X,
WZS1DF-XX-E9-XX-XX X &
WZS1DF-XX-E1-XX-XX-X
SOLENOID VALVES.

(FOR MODELS AND SIZES COVERED BY THE SCOPE OF THIS APPROVAL PLEASE CONSULT THE WRAS ONLINE DIRECTORY AND/OR ACCOMPANYING WRAS APPROVAL LETTER)

Basis of compliance: Tested to regulators Specification Test Code Sheets

Valid from: 1st May 2026

Date of expiry: 31st May 2031

Authorised by:

Ian Hughes, WRAS Approvals Manager

Certificate issued: 10th March 2026



中国国家强制性产品认证证书

编号：2020312307000034

委托人 余姚市三力信电磁阀有限公司
地址 余姚市虹桥路9号
生产者 余姚市三力信电磁阀有限公司
地址 余姚市虹桥路9号
生产企业 余姚市三力信电磁阀有限公司
生产地址 浙江省余姚市虹桥路9号
产品名称 防爆线圈
型号规格 XI-220
防爆标志 Ex mb IIC T4 Gb
依据标准 GB3836.1-2010, GB3836.9-2014

认证模式 型式试验+初始工厂检查+获证后监督

上述产品符合 CNCA-C23-01: 2019《强制性产品认证实施规则 防爆电气》和 CNEX-C2301-2019《强制性产品认证实施细则 防爆电气》的要求。

产品相关信息见附页（共1页）。

颁发日期 2020 年 04 月 17 日 有效期至 2025 年 04 月 16 日

证书有效期内本证书的有效性依据发证机构的定期监督获得保持。

主任：

南阳防爆电气研究所有限公司

网址：www.ccc-cnex.com ccc.china-ex.com
地址：中国河南省南阳市仲景北路20号
电话：0377-63239734
邮政编码：473008
邮箱：ccc@cn-ex.com

CN 0004253



证书号第4902248号

发明专利证书

发明名称：一种用于电磁阀的电磁线圈结构

发明人：毛杉海;邵杰;鲁焕炯;顾国云

专利号：ZL 2021 1 1170274.1

专利申请日：2021年10月08日

专利权人：余姚市三力信电磁阀有限公司

地址：315400 浙江省宁波市余姚市虹桥路9号

授权公告日：2022年01月25日　　授权公告号：CN 113611478 B

国家知识产权局依照中华人民共和国专利法进行审查，决定授予专利权，颁发发明专利证书并在专利登记簿上予以登记。专利权自授权公告之日起生效。专利权期限为二十年，自申请日起算。

专利证书记载专利权登记时的法律状况。专利权的转移、质押、无效、终止、恢复和专利权人的姓名或名称、国籍、地址变更等事项记载在专利登记簿上。

局长
申长雨

2022年01月25日

第1页(共2页)



证书号第4796429号

发明专利证书

发明名称：一种深海用同轴电磁阀及使用方法

发明人：毛杉海;魏荣波;顾国云

专利号：ZL 2021 1 1043502.9

专利申请日：2021年09月07日

专利权人：余姚市三力信电磁阀有限公司

地址：315400 浙江省宁波市余姚市虹桥路9号

授权公告日：2021年11月16日　　授权公告号：CN 113483142 B

国家知识产权局依照中华人民共和国专利法进行审查，决定授予专利权，颁发发明专利证书并在专利登记簿上予以登记。专利权自授权公告之日起生效。专利权期限为二十年，自申请日起算。

专利证书记载专利权登记时的法律状况。专利权的转移、质押、无效、终止、恢复和专利权人的姓名或名称、国籍、地址变更等事项记载在专利登记簿上。

局长
申长雨

第1页(共2页)



中安认证

质量管理体系认证证书

经北京中安质环认证中心有限公司审核，确认

余姚市三力信电磁阀有限公司

统一社会信用代码：91330281720489027D

（注册地址：浙江省余姚市虹桥路9号　　邮编：315400）

质量管理体系符合：

GB/T 19001-2016/ISO 9001:2015

本质量管理体系覆盖下列产品：

电磁阀产品的设计、生产和服务

地址：浙江省余姚市虹桥路9号。

证书号：02920Q10043R7M

有效期：2023年12月12日至2026年12月21日

颁证日期：2023年12月12日

北京中安质环认证中心有限公司

（原名：北京国标质保认证中心）

（地址：北京市朝阳区东三环南路58号嘉恒中心1号楼22层　邮编：100022）

签发人：

任磊

IAF　CNAS



TÜV NORD

Certificate
of conformity with the following
European Directive

Registered No.:
44 799 14 406748 - 026

Low-Voltage Directive 2014/35/EU

This is to certify that the following products comply to the essential requirements (Annex I) of the above mentioned European Directive and the following standards, taking into account the German national deviations:

Product: Solenoid valve

Type designation: SLP series

Applicant: YUYAO SANLIXIN SOLENOID VALVE CO., LTD.
No.9 Hongqiao Road, Yuyao, Zhejiang, China

Standard(s): EN 60730-1:2016

This certificate of conformity is based on the evaluation of samples of the product.
It does not imply an assessment of the production and it does not permit the use of a mark of conformity or of a safety mark of the TÜV NORD CERT GmbH.
The holder of this certificate may use it together with his EU Declaration of Conformity.

Certification Body
Specialist Manager Courier Products

TÜV NORD CERT GmbH
Langemarckstrasse 20
D-45141 Essen
P.O.Box 10 32 61
D-45032 Essen
Fax: +49 (0)201 825-5120
Fax: +49 (0)201 825-3209
Email: product@tuev-nord.de

CE The CE marking may be affixed on the product if all relevant and effective Directives are complied with. CE



TÜV NORD

Certificate
of conformity with the following
European Directive

Registered No.:
44 799 14 406748 - 029

Low-Voltage Directive 2014/35/EU

This is to certify that the following products comply to the essential requirements (Annex I) of the above mentioned European Directive and the following standards, taking into account the German national deviations:

Product: Solenoid valve

Type designation: SLA series

Applicant: YUYAO SANLIXIN SOLENOID VALVE CO., LTD.
No.9 Hongqiao Road, Yuyao, Zhejiang, China

Standard(s): EN 60730-1:2016

This certificate of conformity is based on the evaluation of samples of the product.
It does not imply an assessment of the production and it does not permit the use of a mark of conformity or of a safety mark of the TÜV NORD CERT GmbH.
The holder of this certificate may use it together with his EU Declaration of Conformity.

Certification Body
Specialist Manager Courier Products

TÜV NORD CERT GmbH
Langemarckstrasse 20
D-45141 Essen
P.O.Box 10 32 61
D-45032 Essen
Fax: +49 (0)201 825-5120
Fax: +49 (0)201 825-3209
Email: product@tuev-nord.de

CE The CE marking may be affixed on the product if all relevant and effective Directives are complied with. CE



证书号第5541406号

实用新型专利证书

实用新型名称：一种大口径先导式二位三通电磁阀

发明人：毛杉海;顾国云;鲁焕炯

专利号：ZL 2016 2 0164890.4

专利申请日：2016年03月03日

专利权人：余姚市三力信电磁阀有限公司

授权公告日：2016年09月07日

本实用新型经过本局依照中华人民共和国专利法进行初步审查，决定授予专利权，颁发本证书并在专利登记簿上予以登记。专利权自授权公告之日起生效。

本专利的专利权期限为十年，自申请日起算。专利权人应当按照专利法及其实施细则规定缴纳年费。本专利的年费应当在每年03月03日前缴纳。本按照规定缴纳年费的，专利权自应当缴纳年费期满之日起终止。

专利证书记载专利权登记时的法律状况。专利权的转移、质押、无效、终止、恢复和专利权人的姓名或名称、国籍、地址变更等事项记载在专利登记簿上。

局长
申长雨

2016年09月07日

第1页(共1页)



证书号第5541406号

实用新型专利证书

实用新型名称：一种大口径先导式二位三通电磁阀

发明人：毛杉海;顾国云;鲁焕炯

专利号：ZL 2016 2 0164890.4

专利申请日：2016年03月03日

专利权人：余姚市三力信电磁阀有限公司

授权公告日：2016年09月07日

本实用新型经过本局依照中华人民共和国专利法进行初步审查，决定授予专利权，颁发本证书并在专利登记簿上予以登记。专利权自授权公告之日起生效。

本专利的专利权期限为十年，自申请日起算。专利权人应当按照专利法及其实施细则规定缴纳年费。本专利的年费应当在每年03月03日前缴纳。本按照规定缴纳年费的，专利权自应当缴纳年费期满之日起终止。

专利证书记载专利权登记时的法律状况。专利权的转移、质押、无效、终止、恢复和专利权人的姓名或名称、国籍、地址变更等事项记载在专利登记簿上。

局长
申长雨

2016年09月07日

第1页(共1页)



证书号第5541406号

实用新型专利证书

实用新型名称：一种大口径先导式二位三通电磁阀

发明人：毛杉海;顾国云;鲁焕炯

专利号：ZL 2016 2 0164890.4

专利申请日：2016年03月03日

专利权人：余姚市三力信电磁阀有限公司

授权公告日：2016年09月07日

本实用新型经过本局依照中华人民共和国专利法进行初步审查，决定授予专利权，颁发本证书并在专利登记簿上予以登记。专利权自授权公告之日起生效。

本专利的专利权期限为十年，自申请日起算。专利权人应当按照专利法及其实施细则规定缴纳年费。本专利的年费应当在每年03月03日前缴纳。本按照规定缴纳年费的，专利权自应当缴纳年费期满之日起终止。

专利证书记载专利权登记时的法律状况。专利权的转移、质押、无效、终止、恢复和专利权人的姓名或名称、国籍、地址变更等事项记载在专利登记簿上。

局长
申长雨

2016年09月07日

第1页(共1页)



证书号第5541406号

实用新型专利证书

实用新型名称：一种大口径先导式二位三通电磁阀

发明人：毛杉海;顾国云;鲁焕炯

专利号：ZL 2016 2 0164890.4

专利申请日：2016年03月03日

专利权人：余姚市三力信电磁阀有限公司

授权公告日：2016年09月07日

本实用新型经过本局依照中华人民共和国专利法进行初步审查，决定授予专利权，颁发本证书并在专利登记簿上予以登记。专利权自授权公告之日起生效。

本专利的专利权期限为十年，自申请日起算。专利权人应当按照专利法及其实施细则规定缴纳年费。本专利的年费应当在每年03月03日前缴纳。本按照规定缴纳年费的，专利权自应当缴纳年费期满之日起终止。

专利证书记载专利权登记时的法律状况。专利权的转移、质押、无效、终止、恢复和专利权人的姓名或名称、国籍、地址变更等事项记载在专利登记簿上。

局长
申长雨

2016年09月07日

第1页(共1页)

Quality & Manufacturing





















三力信 Sanlixin®

NEXT GENERATION SOLENOID VALVE•SM SERIES

SOLENOID VALVE PATENT NUMBER:ZL 2015 2 0192971.0
COIL PATENT NUMBER:ZL 2015 2 0454099.2

Low Power Strong Thrust Solenoid Valve



Coil Warranty 3 years

Characteristics of SM coil :

1.Power will be 1/4 of the original coil
2.Working long time will no get heat and long life cycle
3.Coil put tension enhanced 3 times faster response speed
4.Significantly lowering the controller power
5.Suit for super high pressure solenoid valve
No need larger power coil
6. Suitable for all kinds of AC/DC solenoid valve

Parameters of the solenoid valve with old type& new type coil

Point	Standard coil	New type coil
Orifice	3.00 mm	3.00 mm
Power consumption	12W/22VA	3W/4.5VA
Max working pressure	13bar	36bar
Coil temp.	⩾80℃	⩽50℃
Noise	AC maybe has the noise	AC no noise
coil life cycle	⩽1,000,000	⩾50,000,00

Green technology :

Low Power Strong Thrust Solenoid Valve Innovation Research And Application

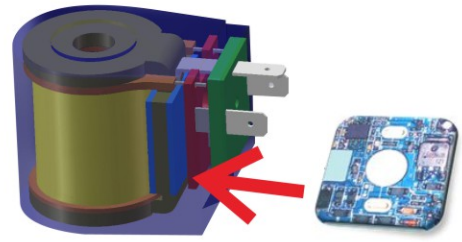

They key technology and research process





2012

Developed module -out install

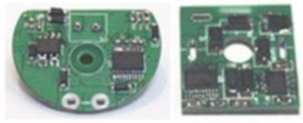

2013

Developed integrated chip



2014

Developed Built-in & low power with high thrust coil



By up to one year of testing and inspection, in 2015 release SM series solenoid valve

Valve body seal material selection list ***P1***

Solenoid valves numbering system for order ***P2***

Flow calculation method seal material review ***P3***

ZS compact series 2/2-way direct acting solenoid valve · normally closed ***P4-8***

Body material: Forged Brass、Stainless Steel　　Pressure: 0-8kgf/cm²
Orifice: Φ2.5mm-10mm　　Pipe size:1/8" -1/2"
Fluid Media: Water、Hot Water、Air、Gas、Oil Etc.



ZS 2/2-way direct acting solenoid valve normally closed ***P9-10***

Body material: Forged Brass　　Pressure: 0-20kgf/cm²
Orifice: Φ10mm-20mm　　Pipe size:1/4" -1"
Fluid Media: Water、Hot Water、Air、Gas、Oil Etc



ZS 2/2-way direct acting solenoid valve normally closed ***P11-12***

Body material: SS304　　Pressure: 0-20kgf/cm²
Orifice: Φ10mm-20mm　　Pipe size:1/4" -1"
Fluid Media: Water、Hot Water、Air、Gas、Oil Etc



ZS 2/2-way large diameter direct acting solenoid valve · normally closed ***P13-14***

Body material: Forged Brass　　Pressure: 0-10kgf/cm²
Orifice: Φ16mm-50mm　　Pipe size: 3/8" -2"
Fluid Media: Water、Hot Water、Air、Gas、Oil Etc.



ZS 2/2-way large diameter direct acting solenoid valve · normally closed ***P15-16***

Body material: SS304　　Pressure:0-10kgf/cm²
Orifice: Φ16mm-50mm　　Pipe size:3/8" -2"
Fluid Media: Water、Hot Water、Air、Gas、Oil Etc



ZS 2/2-way flange large diameter direct acting solenoid valve · normally closed ***P17-19***

Body material: SS304　　Pressure:0-10kgf/cm²
Orifice: Φ16mm-100mm　　Flange DN15-100
Fluid Media: Water、Hot Water、Air、Gas、Oil Etc



ZS plastic series 2/2-way zero press differential solenoid valve · normally closed ***P20-21***

Body material: Reinforced Nylon(PA6)　　Pressure: 0-8kgf/cm²
Orifice: Φ15mm-40mm　　Pipe size: 1/2" -1 1/2"
Fluid Media: Water、Air



ZS 2/2-way direct acting solenoid valve· normally open ***P22-23***

Body material: brass　　Pressure:0-13kgf/cm²
Orifice: Φ10mm-20mm　　Pipe size: 1/4" -1"
Fluid Media: Air、Gas、Water、Hot water、Liquids、Light oil



Sanlixin Solenoid Valve

ZS 2/2-way direct acting solenoid valve· normally open **P24-25**

Body material: Stainless steel Pressure:0-13kgf/cm²
Orifice: Φ10mm-20mm Pipe size: 1/4" -1"
Fluid Media: Air、Gas、Water、Hot water、Liquids、Light oil



ZS 2/2-way direct acting solenoid valve · normally open **P26-27**

Body material: Forged Brass Pressure: 0-5kgf/cm²
Orifice: Φ4mm-50mm Pipe size: 3/8" -2"
Fluid Media: Water、Hot Water、Air、Gas、Oil Etc



ZS 2/2-way direct acting solenoid valve normally open **P28-31**

Body material:SS304 Pressure:0-5kgf/cm²
Orifice: Φ4mm-50mm Pipe size:3/8" -2" Flange DN15-50
Fluid Media: Water、Hot Water、Air、Gas、Oil Etc



ZS plastic series 2/2-way zero press differential solenoid valve · normally open **P32**

Body material: Reinforced Nylon(PA6) Pressure: 0-5kgf/cm²
Orifice: Φ15mm-25mm Pipe size: 1/2" -1"
Fluid Media: Water、Air Etc



ZS series coil parameters tables **P33**

SLP compact series 2/2-way direct acting solenoid valve · normally closed **P34-37**

Body material: Forged Brass、SS316 Pressure:0-13kgf/cm²
Orifice: Φ3mm-6mm Pipe size: 1/8" -1/2"
Fluid Media: Water、Hot Water、Air、Gas、Oil Etc



SLP small series 2/2-way direct acting solenoid valve · normally closed **P38**

Body material: Forged Brass、SS316 Pressure: 0-13kgf/cm²
Orifice: Φ3mm-4mm Pipe size: 3/8"
Fluid Media: Water、Hot Water、Air、Gas、Oil Etc.



SLP compact series 2/2-way direct acting solenoid valve · normally open **P39-40**

Body material: Forged Brass、SS316 Pressure: 0-30kgf/cm²
Orifice: Φ1mm-4mm Pipe size: 1/8" -1/4"
Fluid Media: Water、Hot Water、Air、Gas、Oil Etc



SLP small series 2/2-way pilot operated solenoid valve · normally closed **P41-42**

Body material: Forged Brass、SS316 Pressure:0.1-16kgf/cm²
Orifice: Brass Φ10.5mm Stainless Steel Φ9mm Pipe size:1/4"-1/2"
Fluid Media: Water、Hot Water、Air、Gas、Oil Etc.



SLP small series 2/2-way direct acting solenoid valve · normally closed **P43-44**

Body material: Forged Brass、SS316 Pressure:0-16kgf/cm²
Orifice: Brass Φ10.5mm Stainless Steel Φ9mm Pipe size: 1/4"~1/2"
Fluid Media: Water、Hot Water、Air、Gas、Oil Etc



SLP small series 2/2-way pilot operated solenoid valve·normally open **P45-46**

Body material: Forged Brass、SS316 Pressure:0. 1-13kgf/cm²
Orifice: Brass Φ10.5mm Stainless Steel Φ9mm Pipe size:1/4"~1/2"
Fluid Media: Water、Hot Water、Air、Gas、Oil Etc



SLP 2/2-way large diameter pilot operated solenoid valve · normally closed **P47-48**

Body material: Forged Brass Pressure: 0.5-16kgf/cm²
Orifice: Φ13mm-50mm Pipe size: 3/8" -2"
Fluid Media: Water、Hot Water、Air、Gas、Oil Etc



SLP 2/2-way large diameter pilot operated solenoid valve · normally closed **P49-52**

Body material: SS304 SS316 Pressure:0.5-16kgf/cm²
Orifice: Φ13mm-100mm Pipe size:3/8" -2" Flange DN25-100
Fluid Media: Water、Hot Water、Air、Gas、Oil Etc



SLP plastic series 2/2-way pilot operated solenoid valve · normally closed **P53**

Body material: Reinforced Nylon(PA6) Pressure:0.5-10kgf/cm²
Orifice: Φ13mm-40mm Pipe size:3/8" -1 1/2"
Fluid Media: Water、Air



SLP 2/2-way large diameter pilot operated solenoid valve · normally open **P54-55**

Body material: Forged Brass Pressure:0.5-13kgf/cm²
Orifice: 13mm-50mm Pipe size:3/8"-2"
Fluid Media: Water、Hot Water、Air、Gas、Oil Etc.



SLP 2/2-way large diameter pilot operated solenoid valve · normally open **P56-59**

Body material: SS316 Pressure:0.5-13kgf/cm²
Orifice: Φ13mm-50mm Pipe size:3/8"-2" Flange:DN25-50
Fluid Media: Water、Hot Water、Air、Gas、Oil Etc



SLP plastic series 2/2-way pilot operated solenoid valve · normally open **P60**

Body material: Reinforced Nylon(PA6) Pressure: 0.5-8kgf/cm²
Orifice: Φ13mm-40mm Pipe size: 3/8" -1 1/2"
Fluid Media: Water、Air



Sanlixin Solenoid Valve

SLP series coil parameters tables **P61**

SLA 2/2-way pilot operated piston solenoid valve · normally closed **P62-64**

Body material: Forged Brass
Orifice: Φ15mm-50mm
Fluid Media: Water、Hot Water、Air、Gas、Oil Etc
Pressure: 0.5-25kgf/cm²
Pipe size: 3/8”-2”



SLA 2/2-way pilot operated piston solenoid valve · normally closed **P65-69**

Body material: SS304
Orifice: Φ15mm-100mm
Fluid Media: Water、Hot Water、Air、Gas、Oil Etc
Pressure: 0.5-25kgf/cm²
Pipe size: 3/8”-2” Flange: DN25-150



SLA 2/2-way pilot operated piston solenoid valve · normally open **P70-71**

Body material: Forged Brass
Orifice: Φ15mm-50mm
Fluid Media: Water、Hot Water、Air、Gas、Oil Etc
Pressure: 0.5-10kgf/cm²
Pipe size: 3/8”-2”



SLA 2/2-way pilot operated piston solenoid valve · normally open **P72-73**

Body material: SS304
Orifice: Φ15mm-50mm
Fluid Media: Water、Hot Water、Air、Gas、Oil Etc
Pressure: 0.5-10kgf/cm²
Pipe size: 3/8”-2” Flange: DN25-50



SLA series coil parameters tables **P74**

SLH 2/2-way high temperature solenoid valve · normally closed **P75-77**

Body material: SS304
Orifice: Φ15mm-50mm
Fluid Media:Steam、Heat Conduction Oil Etc
Pressure: 0.5-25kgf/cm²
Pipe size: 3/8”-2” Flange: DN25-50



ZCT 2/2-way series solenoid valve normally closed **P78-80**

Body material: Stainless Steel
Orifice: Φ3mm-15mm
Fluid Media: Steam、Water、Hot Water、Air、Gas、Oil Etc
Pressure: 0-13kgf/cm²
Pipe size: 1/8”-1”



SLG series 2/2-way high pressure solenoid valve · normally closed **P81-83**

Body material: Forged Brass、Stainless Steel
Orifice: Φ1mm-25mm
Fluid Media: Water、Hot Water、Air、Oil Etc
Pressure: 0-100kgf/cm²
Pipe size: 1/8”-1”



SLG series 2/2-way small size high pressure solenoid valve · normally open **P84-85**

Body material: SS316
Orifice: Φ0.8mm-2.0mm
Fluid Media: Water、Air Etc
Pressure: 0-170kgf/cm²
Pipe size: 1/8”-1/4”



SLGA series 2/2-way high pressure solenoid valve P86-87

Body material: Forged Brass
Orifice: Φ14.5mm
Fluid Media: Air
Pressure: 0.5-50kgf/cm^2
Pipe size: 3/8" -3/4"



SLZ series 2/2-way high pressure solenoid valve · normally closed P88-89

Body material: Forged Brass、SS316
Orifice: Φ1mm-3mm
Fluid Media:Water、Hot Water、Air、Oil Etc
Pressure: 0-170kgf/cm^2
Pipe size: 1/8" -3/8"



SLZ series high pressure pilot operate solenoid valve · normally closed P90-91

Body material: Stainless Steel
Orifice: Φ6.0mm Φ8.0mm Φ10.0mm
Fluid Media: Water、Air
Pressure: 0.5-110kgf/cm^2
Pipe size: 1/8" -1/2"



SLZ series 2/2-way high pressure pilot operated solenoid valve · normally closed P92

Body material: Forged Brass
Orifice: Φ8mm
Fluid Media: Water、Air、CO^2 Etc
Pressure: 1-150kgf/cm^2
Pipe size: 1/4" -3/8"



SLV series 3/2-way direct acting solenoid valve P93-99

Body material: Forged Brass、Stainless Steel
Orifice: Φ1.5mm-3mm
Fluid Media: Water、Hot Water、Air、Oil Etc
Pressure: 0-12kgf/cm^2
Pipe size: 1/8" -1/4"



SLT series 3/2-way direct acting solenoid valve P100-104

Body material: Forged Brass、Stainless Steel
Orifice: Φ1.5mm-4mm
Fluid Media: Water、Hot Water、Air、Oil Etc
Pressure: 0-13kgf/cm^2
Pipe size: 1/8" -1/4"



SLT series 3/2-way pilot operated solenoid valve · normally closed P105-106

Body material: Forged Brass
Orifice: ϕ16mm
Fluid Media: Water、Air Etc
Pressure: 0.5-10kgf/cm^2
Pipe size: 3/8" −1/2"



SLT series 3/2-way direct acting solenoid valve · universal P107-P108

Body material: Forged Brass
Orifice: ϕ6-32mm
Fluid Media: Water、Air Etc
Pressure: 0-15bar
Pipe size:1/4" −1-1/2"



Sanlixin Solenoid Valve

SLC series water dispenser plastic solenoid valve · normally closed P109-111



Body material: Plastic
Orifice: Φ2.5mm-9mm
Solenoid Valve(Outlet): Tube Insert Type Connection
Fluid Media: Water、Boiling Water、Air
Pressure:0-120PSI
Pipe size: 1/8" -1/4"

SLC series inlet plastic solenoid valve · normally closed P112-115



Body material: POM
Orifice: Φ10mm
Fluid Media: Water
Pressure: 0.2~8.0bar
Pipe size: NPT1/4"-1/2" 、Quick connect

SLC series outlet plastic solenoid valve · normally closed P116-117



Body material: PES、PP
Orifice: Φ10mm
Fluid Media: Water
Pressure: 0~0.5 PSI
Pipe size: Insert Type

SLC series waste water plastic solenoid valve · normally closed P118



Body material: POM
Orifice: Φ10mm
Fluid Media: Water
Pressure: 0.2~8bar
Pipe size: Quick connect

2W series 2/2-way direct acting solenoid valve · normally closed P119-120



Body material: Forged Brass、Cast Brass
Orifice: Φ2.5mm-50mm
Fluid Media: Water、Hot Water、Air、Gas 、Oil Etc
Pressure: 0-7kgf/cm^2
Pipe size: 1/8" -2"

2W series 2/2-way direct acting solenoid valve · normally closed P121-122



Body material: SS304
Orifice: Φ2.5mm-50mm
Fluid Media: Water、Hot Water、Air、Gas 、Oil Etc
Pressure:0-7kgf/cm^2
Pipe size:1/8" -2" Flange: DN15-50

2W series 2/2-way direct acting solenoid valve · normally open P123



Body material: Forged Brass、Cast Brass
Orifice: Φ2.5mm-50mm
Fluid Media: Water、Hot Water、Air、Gas 、Oil Etc
Pressure: 0-5kgf/cm^2
Pipe size: 1/8" -2"

2W series 2/2-way direct acting solenoid valve · normally open P124-125



Body material: SS304
Orifice: Φ2.5mm-50mm
Fluid Media: Water、Hot Water、Air、Gas 、Oil Etc
Pressure: 0-5kgf/cm^2
Pipe size: 1/8" -2" Flange DN15-50

DF series pilot operated liquid solenoid valve **P126-127**

Body material: Cast Brass 、Cast Iron
Pressure:0.3-8kgf/cm^2
Orifice: Φ15mm-150mm
Pipe size:1/2”-2” Flange: DN40-150
Fluid Media:Water、Hot Water、Air、Gas 、Oil Etc



ZQDF general use series solenoid valve · normally closed **P128-129**

Body material: Forged Brass
Pressure: 0-8kgf/cm^2
Orifice: Φ15mm-50mm
Pipe size:1/2”-2” Flange: DN20-50
Fluid Media:Steam、Water、Hot Water、Air、Gas 、Oil Etc



ZQDF general use series solenoid valve · normally closed **P130-131**

Body material: Stainless Steel
Pressure: 0-8kgf/cm^2
Orifice: Φ15mm-50mm
Pipe size: 1/2”-2” Flange: DN25-50
Fluid Media: Steam、Water、Hot Water、Air、Gas 、Oil Etc



ZCZ series 2/2-way solenoid valve · normally closed **P132-134**

Body material: Cast Brass 、Cast Iron
Pressure: 0.5-16kgf/cm^2
Orifice: Φ15mm-150mm
Pipe size: 1/2”-2” Flange: DN20-150
Fluid Media: Steam、Water、Hot Water、Air、Oil Etc



SLF PTFE solenoid valve **P135-136**

Body material: PTFE
Pressure: 0-6kgf/cm^2
Orifice: Φ3mm-25mm
Fluid Media: Super Clean Medium、Strong Acid、Strong Alkali Etc



SLUF UPVC solenoid valve **P137**

Body material: UPVC
Pressure: 0. 1-6kgf/cm^2
Orifice: Φ16mm-50mm
Pipe size: 1/2”-2”
Fluid Media: Weak acid and alkali（Air、liquid）



SLDF 2/2-way series underwater solenoid valve **P138-139**

Body material: Forged Brass、Cast Brass 、Cast Iron
Pressure: 0-6kgf/cm^2
Orifice: Φ15mm-150mm
Pipe size:1/2”-2” Flange: DN65-150
Fluid Media:Water、Fluids Etc



ZCM zero pressure differential gas solenoid valve **P140-142**

Body material: Forged Brass
Pressure: 0-5kgf/cm^2
Orifice: Φ3mm-100mm
Pipe size:1/8”-2” Flange: DN40-100
Fluid Media:Coal Gas、Natural Gas、Other Normally Gas Etc



Sanlixin Solenoid Valve

SLPM 2/2-way latching solenoid valve P143-144

Body material: Forged Brass
Orifice: Φ2mm-50mm
Fluid Media:Water、Air Etc
Pressure:0.5-16kgf/cm^2
Pipe size:1/8" -2"



SLW 2/2-way direct acting small type solenoid valve • normally closed P145-146

Body material: Brass、Stainless Steel、Plastic
Orifice: Φ1.2mm-3.0mm
Fluid Media: Water、Air Etc
Pressure: 0-30kgf/cm^2
Pipe size: 1/8" M5 Hose connection



SLW 2/2-way direct acting small type solenoid valve • normally closed P147-148

Body material: Brass、Plastic
Orifice: Φ1.5mm-3.0mm
Fluid Media: Water、Air Etc
Pressure:0-17kgf/cm^2
Pipe size: Hose connection



SLPW 2/2-way low power solenoid valve • normally closed P149-150

Body material: Brass、SS316
Orifice: Φ2mm-25mm
Fluid Media: Water、Air
Pressure: 0-9kgf/cm^2
Pipe size: 1/8" -1"
Power: 1.4W



SLB 2/2-way high (low) temperature solenoid valve • normally closed P151-155

Body material: Brass SS316
Orifice: Φ1.5mm-40mm
Fluid Media: Steam、Heat conduction oil、CO2 、Liquid（Gas） Ammonia Etc
Pressure: 0-50kgf/cm^2
Pipe size: 1/8" -1 1/2" Flange: DN25-40



SLBW 2/2-way cryogenic solenoid valve • normally closed P156-158

Body material: SS316
Orifice: Φ2mm-6mm
Fluid Media: N_2、O_2、CO_2
Pressure: 0-65kgf/cm^2
Pipe size: 1/8" -1/2"



SAV direct acting gas solenoid valve P159-160

Body material: Aluminum Alloy
Orifice: Φ6mm-45mm
Fluid Media: Air、Fuel Gas
Pressure: 0-2000mbar
Pipe size: 1/4" -2"



SCF fuel gas emergency cut off solenoid valve P161-163

Body material: Brass
Orifice: Φ15 Φ20 Φ25mm
Fluid Media: Fuel Gas
Pressure: 0-500mbar
Pipe size: 1/2" 、3/4" 、1"



SCF large diameter emergency cut off solenoid valve **P164**

Body material: Cast Iron
Orifice: Φ65 Φ80 Φ100mm
Fluid Media: Fuel Gas
Pressure: 0-6bar
Pipe size: DN65~100



SCFT series gas emergency shutoff valve **P165-166**

Body material: Aluminum
Orifice: Φ19mm
Fluid Media: Gas, Natural gas, Liquefied petroleum gas
Pressure: 0 ~ 360mbar
Pipe size: 1/2"~3/4"



SLE manifold type series solenoid valve **P167-169**

Body material: Aluminum
Orifice: Φ2.0~9.0mm
Fluid Media: Air、Liquid Water Etc
Pressure: 0 ~ 20 kgf/cm^2
Outlet: 1/8"~1/2"



SLE manifold type series solenoid valve **P170-172**

Body material: Brass
Orifice: Φ10mm
Fluid Media: Air、Liquid Water Etc
Pressure: 0 ~ 13 kgf/cm^2
Outlet: 1/4"~1/2" Inlet:1/2"



SLJ plate-type, integrated series solenoid valve **P173-177**

Body material: Brass
Orifice: Φ1.2mm-3.0mm
Pressure: 0-21kgf/cm^2
Pipe size: Plate-Type



SLM 2/2-way direct acting compact series solenoid valve **P178-179**

Body material: Brass、stainless steel
Orifice: Φ1.0mm-2.5mm
Pressure:0-20kgf/cm^2
Pipe size: 1/8" -1/4"



SLM 2/2-way miniature direct acting plastic solenoid valve **P180-181**

Body material: PPS
Orifice: Φ2.5mm
Fluid Media: Water、Air
Pressure:0-10bar
Pipe size: NPT1/8"、1/4" quick plug



SLM 2/2-way pilot operate solenoid valve • normally closed **P182**

Body material: Brass、stainless steel
Orifice: Φ12mm Φ20mm Φ25mm
Pressure:0.5-16kgf/cm^2
Pipe size: 3/8" −1"



Sanlixin Solenoid Valve

SLM 2/2-way pilot solenoid valve series · Normally Open P183

Body material: Brass、SS316
Orifice: Φ12mm-25mm
Pressure: 0.5-10kgf/cm²
Pipe size: 3/8" -1"



SLVM 2/3-way direct acting compact series solenoid valve P184-188

Body material: Brass、SS316
Orifice: Φ1.5mm-2.5mm
Pressure: 0-16kgf/cm²
Pipe size: 1/8" -1/4"



SLMA Pilot operated piston solenoid valve · Normally Closed P189-190

Body material: Brass、SS316
Orifice: Φ16mm-25mm
Pressure: 0.5-10kgf/cm²
Pipe size: 1/2" -1"



DMF-Z right angle type latching solenoid valve P191-193

Body material: Aluminum
Orifice: Φ20mm-62mm
Fluid Media: Air Etc
Pressure: 0.2-8kgf/cm²
Pipe size: 3/4" -2 1/2"



SBD timing of drainage solenoid valve P194-195

Body material: Forged Brass
Orifice: Φ3mm
Fluid Media: Water Etc
Pressure: 0-16kgf/cm²
Pipe size: G1/4" G3/8" G1/2"



ZXF 2/2-way small solenoid axial valve · normally closed P196-197

Body material: Stainless steel
Orifice: Φ3mm～Φ8mm
Fluid Media: Water Etc
Pressure: 0-160kgf/cm²
Pipe size: G1/8"～G1/2"



ZXF 2/2-way solenoid axial valve · normally closed P198-199

Body material: Forged Brass、Stainless steel
Orifice: Φ10mm~30mm
Fluid Media: Water Etc
Pressure: 0 ~ 64 kgf/cm²
Pipe size: G1/2"~G1 1/2"



ZXF 2/2-way solenoid axial valve · normally open P200-201

Body material: Forged Brass、Stainless steel
Orifice: Φ10mm~16mm
Fluid Media: Water Etc
Pressure: 0 ~ 64 kgf/cm²
Pipe size: G1/4"~G1/2"



ZXFV 3/2-way solenoid axial valve · normally closed P202

Body material: Forged Brass
Orifice: Φ16mm
Fluid Media: Water、Air
Pressure: 0 ~ 40 kgf/cm^2
Pipe size: G3/8"~G3/4"



ZXFE manifold coaxial valve·normally closed P203-205

Body material: Forged Brass、Stainless steel
Orifice: Φ6mm-Φ25mm
Fluid Media: Water、Air
Pressure: 0 ~ 110 kgf/cm^2
Pipe size: G1/4"~G1"



SGH compact series 2/2-way direct acting solenoid valve · normally closed P206-207

Body material: Forged Brass
Orifice: Φ1.5～4mm
Fluid Media: Water、Hot Water、Air、Gas 、Oil Etc
Pressure: 0 ~ 20 kgf/cm^2
Pipe size: G1/8"～1/4"



SGH compact series 2/2-way direct acting solenoid valve · normally open P208-209

Body material: Forged Brass
Orifice: Φ1.5～4mm
Fluid Media: Water、Hot Water、Air、Gas 、Oil Etc
Pressure: 0 ~ 20 kgf/cm^2
Pipe size: G1/8"～1/4"



SLK plastic series 2/2-way irrigation solenoid valve normally closed P210-211

Body material: Nylon
Orifice: Φ25～100mm
Fluid Media: Water
Pressure: 0. 5～15kgf/cm^2
Pipe size: G3/4"～4"



SLY 2/2-way solenoid valve · normally open P212-213

Body material: Brass、Stainless steel
Orifice: Φ1～2.5mm
Fluid Media: Water、Hot Water、Air、Gas 、Oil Etc
Pressure: 0 ~ 30 kgf/cm^2
Pipe size:G1/8"～1/4"



SLQF 2/2-way solenoid valve P214-216

Body material: Forged Brass、SS304
Orifice: Φ15～45mm
Fluid Media:Water、Air、Gas 、Oil、Steam Etc
Pressure: 0 ~ 16kgf/cm^2
Pipe size: 3/8"～2"



SLQF series 2/2-way solenoid valve·normally open P217-218

Body material：Forged Brass、 SS316
Orifice：Φ15mm~25mm
Fluid Media: Water、Air、Gas、Oil、Steam Etc.
Pressure：0 ~ 16 kgf/cm^2
Pipe size：3/8"~1"



Sanlixin Solenoid Valve

SBLF series gas station special solenoid valve **P219**

Body material: Forged Brass
Orifice: Φ5.5mm
Fluid Media: Gas 、Oil
Pressure: 0 ~ 0.5kgf/cm^2
Pipe size: 1/8"、1/4"



SM series solenoid valve **P220**

SMS series 2/2-way direct acting solenoid valve·normally closed **P221-224**

Body material：Forged Brass、 SS316
Orifice：Φ2.0mm~7.5mm
Fluid Media: Water、Hot Water、Air、Gas、Oil Etc.
Pressure：0 ~ 120 kgf/cm^2
Pipe size：G1/8"~1/2"



SMS 2/2-way large diameter direct acting solenoid valve·normally closed **P225-226**

Body material：Forged Brass、SS304
Orifice：Φ16mm~50mm
Fluid Media: Water、Hot Water、Air、Gas、Oil Etc.
Pressure：0 ~ 10 kgf/cm^2
Pipe size：G3/8"~2"



SMS 2/2-way flange connection direct acting solenoid valve·normally closed **P227**

Body material：SS304
Orifice：Φ15mm~50mm
Fluid Media: Water、Hot Water、Air、Gas、Oil Etc.
Pressure：0 ~ 10 kgf/cm^2
Pipe size：Flange ：DN15~50



SMS series coil parameters tables **P228**

SMP compact series 2/2-way direct acting solenoid valve·normally closed **P229-232**

Body material：Forged Brass、stainless steel
Orifice：Φ2. 0mm~6. 0mm
Fluid Media: Water、Hot Water、Air、Oil Etc.
Pressure：0 ~ 30 kgf/cm^2
Pipe size：1/8"~1/2"



SMG series 2/2-way high pressure solenoid valve·normally closed **P233-235**

Body material：Forged Brass、Stainless Steel
Orifice：Φ1.5mm~25mm
Fluid Media: Water、Hot Water、Air、Oil Etc.
Pressure：0 ~ 190 kgf/cm^2
Pipe size：G1/8"~G1"



SMZ series 2/2-way high pressure solenoid valve·normally closed **P236-237**

Body material：Stainless Steel
Orifice：Φ1mm~25mm
Fluid Media: Water、Hot Water、Air、Oil Etc.
Pressure：0 ~ 360 kgf/cm^2
Pipe size：G1/8"~G1"



SMZ ***series 2/2-way zero leakage super high pressure solenoid valve · normally closed*** **P238-239**

Body material：SS316
Orifice：Φ0.5mm
Fluid Media: Water、Air Etc.
Pressure：0 ~ 700 kgf/cm^2
Pipe size：1/8"~1/4"



SQK ***air operated valve*** **P240**



SQKS ***2/2-way direct acting air operated valve · normally closed*** **P241-243**

Body material：Brass、Stainless Steel
Orifice：Φ4mm~50mm
Fluid Media: Water、Air、gas、Light oil
Pressure：0 ~ 10 kgf/cm^2
Pipe size：1/4"~2"　Flange DN15-50



SQKS ***plastic series 2/2-way direct acting air operated valve · normally closed*** **P244**

Body material：PA6
Orifice：Φ15mm~25mm
Fluid Media: Water、Air、gas、Light oil
Pressure：0 ~ 8 kgf/cm^2
Pipe size：1/2"~1"



SQKS ***2/2-way direct acting flange operated air control valve · normally open*** **P245-247**

Body material：Brass、Stainless Steel
Orifice：Φ4mm~50mm
Fluid Media: Water、Air、gas、Light oil
Pressure：0 ~ 10kgf/cm^2
Pipe size：1/4"~2"　Flange DN15-50



SQKS ***plastic series 2/2-way direct acting air operated valve · normally open*** **P248**

Body material：PA6
Orifice：Φ15mm~25mm
Fluid Media: Water、Air、gas、Light oil
Pressure：0 ~ 8 kgf/cm^2
Pipe size：1/2"~1"



SQKP ***small series 2/2-way direct acting air operated valve · Normally closed*** **P249-250**

Body material：Brass、Stainless Steel
Orifice：Φ3mm~6mm
Fluid Media: Water、Air、gas、Light oil
Pressure：0 ~ 10kgf/cm^2
Pipe size：1/8"~1/2"



Sanlixin Solenoid Valve

SQKP 2/2-way large diameter pilot operate air operated valve · normally closed P251-253

Body material：Brass、Stainless Steel
Orifice：Φ13mm~100mm
Fluid Media: Water、Air、gas、Light oil
Pressure：0.5 ~ 13kgf/cm^2
Pipe size：3/8"~2" Flange DN25~100



SQKP plastic series 2/2-way pilot operate air operated valve · normally closed P254

Body material：PA6
Orifice：Φ13mm~40mm
Fluid Media: Water、Air、gas、Light oil
Pressure：0.5 ~ 10kgf/cm^2
Pipe size：3/8"~1-1/2"



SQKP small series 2/2-way direct acting air operated valve · normally open P255

Body material：Brass、Stainless Steel
Orifice：Φ3mm~6mm
Fluid Media: Water、Air、gas、Light oil
Pressure：0 ~ 10kgf/cm^2
Pipe size：1/8"~1/2"



SQKP 2/2-way large diameter pilot operated air operated valve · normally open P256-257

Body material：Brass、Stainless Steel
Orifice：Φ13mm~100mm
Fluid Media: Water、Air、gas、Light oil
Pressure：0.5 ~ 13kgf/cm^2
Pipe size：3/8"~2" Flange DN25~100



SQKP plastic series 2/2-way pilot operate air operated valve · normally open P258

Body material：PA6
Orifice：Φ13mm~40mm
Fluid Media: Water、Air、gas、Light oil
Pressure：0.5~ 10kgf/cm^2
Pipe size：3/8"~1-1/2"



SQKF 2/2-way large diameter direct acting vacuum air operated valve · normally closed P259-260

Body material：Brass、Stainless Steel
Orifice：Φ16mm~50mm
Fluid Media: Water、Air、gas、Light oil
Pressure：-1 ~ 10kgf/cm^2
Pipe size：3/8"~2"



SQKT 3/2-way direct acting air operated valve P261-265

Body material：Brass、Stainless Steel
Orifice：Φ1.5mm~4.0mm
Fluid Media: Water、Air、gas、Light oil
Pressure：0 ~ 13kgf/cm^2
Pipe size：1/8"~1/4"



SQKE direct acting manifold type air operated valve ····· P266-267

Body material：Brass、Aluminum、Stainless Steel
Orifice：Φ2.0mm~6.0m
Fluid Media: Water、Air、gas、Light oil
Pressure：0 ~ 10kgf/cm^2
Pipe size：1/8"~1/4"



SQGM series small diaphragm isolation air operated valve· normally open ····· P268-269

Body material：SS316
Orifice：Φ2.0mm~5.0m
Fluid Media: Weak acid alkali fluid、Ultra clean fluid
Pressure：0 ~ 16kgf/cm^2
Pipe size：1/8"~1/2"



SLEM manifold type air control special use solenoid valve ····· P270-271

Body material：Brass、Aluminum、Stainless Steel
Orifice：Φ1.2mm
Fluid Media: Air
Pressure：0 ~ 9kgf/cm^2
Pipe size：1/8"~1/4"



JZF series angle seat valve ····· P272-278

Body material: Stainless Steel
Orifice: Φ10mm-65mm
Fluid Media: Air Etc
Pressure: 0-16kgf/cm^2
Pipe size: screw-type welded-type



ZKS compact series 2/2-way direct acting vacuum solenoid valve · normally closed ····· P279-281

Body material: Brass、Stainless Steel
Orifice: Φ2.5mm-Φ5mm
Fluid Media: Vacuum
Pressure:-1~5kgf/cm^2
Pipe size: 1/8"~1/2"



ZKS 2/2-way large diameter direct acting vacuum solenoid valve · normally closed ····· P282-283

Body material: Brass
Orifice: Φ16mm-Φ50mm
Fluid Media: Vacuum
Pressure: -1~6kgf/cm^2
Pipe size：3/8"~2"



ZKS 2/2-way large diameter direct acting vacuum solenoid valve · normally closed ····· P284-285

Body material: Stainless Steel
Orifice: Φ16mm-Φ50mm
Fluid Media: Vacuum
Pressure: −1~6kgf/cm^2
Pipe size: 3/8"~2"



Sanlixin Solenoid Valve

ZKS 2/2-way large diameter direct acting (stainless steel)vacuum solenoid valve · normally closed P286

Body material: Stainless Steel
Orifice: Φ15mm-Φ50mm
Fluid Media: Vacuum
Pressure: −1~6kgf/cm²
Pipe size: Flange15−50



STJF series proportional valve P287-288

Body material: Brass、Stainless Steel
Orifice: Φ1. 0mm-Φ4. 0mm
Fluid Media: Air、Oxygen、water
Pressure: 0-10kgf/cm²
Pipe size：G1/8"-1/4"



STJS 2/2-way flow adjustable direct-acting solenoid valve · normally closed P289-290

Body material：Brass
Orifice：Φ2.0mm~5.0m
Fluid Media: Water、Hot water、Air、oil
Pressure：0 ~ 25kgf/cm²
Pipe size：1/8"~1/4"



SLOW series water hammer resist solenoid valve · normally closed P291-292

Body material：Brass、Stainless Steel
Orifice：Φ16~40mm
Fluid Media: Water
Pressure：0.5 ~ 10kgf/cm²
Pipe size：G1/2"~G1 1/2"



SLPK Clamp connect pilot operated diaphragm Solenoid valve · normally closed P293-294

Body material：Stainless Steel
Orifice：Φ15mm~Φ50mm
Fluid Media: Water
Pressure：0.5 ~ 16kgf/cm²
Pipe size：Clamp Connection



ZSK Clamp connect 2/2-way Solenoid valve · normally closed ..... P295~297

Body material：Stainless Steel
Orifice：Φ15mm~Φ50mm
Fluid Media: Water
Pressure：0 ~ 10kgf/cm²
Pipe size：Clamp Connection



SLR-5 2/4-way direct acting solenoid valve P298-299

Body material：Brass
Orifice：Φ5mm
Fluid Media: Water、Air
Pressure：0 ~ 9kgf/cm²
Pipe size：G1/4" ~ G3/8"



SWXF dmini power solenovid valve · normally closed P300-302

Body material：SS316
Orifice：Φ1.0mm~2.0m
Fluid Media: Neutral fluids such as water and air
Pressure：0 ~ 10kgf/cm^2
Pipe size：M6、1/8”



SWXV 3/2-way miniature direct acting solenoid valve P303-305

Body material：SS316
Orifice：Φ1.5mm~2.0mm
Fluid Media: Neutral fluids such as water and air
Pressure：0 ~ 10kgf/cm^2
Pipe size：M6



SZXF miniature axial solenoid valve · normally closed P306-307

Body material：SS316
Orifice：Φ1.0mm~2.0mm
Fluid Media: Neutral fluids such as water and air
Pressure：0 ~ 10kgf/cm^2
Pipe size：M6



SWGM series micro power small diaphragm isolation solenoid valve · normally closed P308-309

Body material：PEEK、PTFE、SS316
Orifice：Φ1.5mm~3.0mm
Fluid Media: Acid, Alkali, Ultra-clean liquid
Pressure：0 ~ 30PSI
Pipe size：M6



SJGM pinch solenoid valve P310

Body material：POM
Hose size：Φ3.2x6.4mm
Fluid Media: Gases and ultra-clean liquids
Pressure：0 ~ 20PSI
Pipe size：Clip pipe



SJGF 2/2-way pinch solenoid valve normally closed P311

Body material：Aluminum alloy
Hose size：Φ3.2x6.4mm Φ6.4x9.5mm
Fluid Media: Gases and ultra-clean liquids
Pressure：0 ~ 20PSI
Pipe size：Clip pipe



SJGF 2/2-way pinch solenoid valve normally open P312

Body material：Aluminum alloy
Hose size：Φ3.2x6.4mm Φ6.4x9.5mm
Fluid Media: Gases and ultra-clean liquids
Pressure：0 ~ 20PSI
Pipe size：Clip pipe



Sanlixin Solenoid Valve

SJGF3 3/2-way pinch solenoid valve normally open P313

Body material：Aluminum alloy　　Pressure：0 ~ 20PSI
Hose size：Φ3.2x6.4mm Φ6.4x9.5mm　Pipe size：Clip pipe
Fluid Media: Gases and ultra-clean liquids



SWXE micro power small combined solenoid valve P314-316

Body material：SS316、PEEK　　Pressure：0 ~ 10kgf/cm^2
Orifice：Φ1.0mm~2.0mm　　Pipe size：M6、1/8"
Fluid Media: Air, Water, Ultra-clean liquid



SWXG miniature high pressure axial solenoid valve · normally closed P317-318

Body material：SS316　　Pressure：0 ~ 180kgf/cm^2
Orifice：Φ0.3mm~1.0mm　　Pipe size：1/8"
Fluid Media: Neutral fluid, Fluid viscosity: ＜20CST



SWFG miniature high pressure axial solenoid valve · normally closed P319

Body material：SS316　　Pressure：0 ~ 300kgf/cm^2
Orifice：Φ0.5mm~2.0mm　　Pipe size：1/8"
Fluid Media: Neutral fluid, Fluid viscosity: ＜20CST



SWLF 2/2-way direct acting solenoid valve · normally closed P320-321

Body material：SS316　　Pressure：0 ~ 25kgf/cm^2
Orifice：Φ0.8mm~2.0mm　　Pipe size：1/8OD、1/4OD、6OD
Fluid Media: Air, Water Etc.



SWLG 2/2-way Direct acting high-pressure solenoid valve · normally closed P322-323

Body material：SS316　　Pressure：0 ~ 200kgf/cm^2
Orifice：Φ0.3mm~1.0mm　　Pipe size：1/8OD、1/4OD、6OD
Fluid Media: Air, Water Etc.



ZCKS 2/2-way Direct acting high-pressure solenoid valve · normally closed ..... P324~325

Body material：SS316　　Pressure：-1 ~ 8kgf/cm^2
Orifice：Φ2mm~6mm　　Pipe size：1/4OD、3/8OD
Fluid Media: Air



S10 super micro solenoid valve · normally closed P326

Body material：Brass、SS316
Orifice：Φ0.3mm
Fluid Media: Water、Air、gas、Light oil
Pressure：0 ~ 6bar



S15 micro solenoid valve · normally closed P327

Body material：Stainless Steel
Orifice：Φ0.8mm
Fluid Media: Neutral fluid such as air and water
Pressure：0 ~ 6kgf/cm^2



SXCF high pressure manifold solenoid valve · normally closed ..... P328~329

Body material：Brass
Orifice：Φ12mm
Fluid Media: Water
Pressure：1-100 kgf/cm^2
Pipe size：G1/2"、G3/4"



STZF micro proportional solenoid valve ..... P330~334

Body material：Stainless Steel
Orifice：Φ0.08mm−Φ1. 2mm
Fluid Media: neutral gas
Pressure：0 ~ 10kgf/cm^2
Pipe size：G1/8"、G1/4"
flat connect



STJW proportional solenoid valve ..... P335~336

Body material：Stainless Steel
Orifice：Φ4.0mm
Fluid Media: neutral gas
Pressure：0-5 kgf/cm^2
Pipe size：G1/8"、G1/4"
flat connect



SHD 3/2-Way Large Diameter Pilot Operated Solenoid Valve P337

Body material：Aluminium alloy
Orifice：Φ25mm
Fluid Media: neutral gas
Pressure：5-40 kgf/cm^2
Pipe size：G1"



Signal feedback solenoid valve P338

Outlet Voltage：0.5-4.5V
Inlet Voltage：DC5V
Pressure range：0 ~ 16bar
Fluid Media: Water、Air



Sanlixin Solenoid Valve

Wide voltage coil ***P339-P340***

Voltage: AC/DC 24-220V



Flameproof electromagnetic ***P341-P343***



SLX timer switch device ***P344***

Voltage:24V-240V AC/DC
Time range:0.5Sec-99h59min59Sec



Coil type selection list (1) ***P345***

Coil type selection list (2) ***P346***

Coil type selection list (3) ***P347***

Coil type selection list (4) ***P348***

Solenoid valve selection guide ***P349***

Valve body seal material selection List

√ Satisfactory ☒ Unsatisfactory Blank-test(may or may not be used)

Material / Fluid Media	Brass	Cast Iron	Stainless Steel	Plastic	NBR	EPDM	VITON	PTFE
Air	√	√	√	√	√	√	√	√
Natural Gas	√	√	√		√	√	√	√
Oxygen	√	√	√	√	√	√	√	√
Hydrogen	√		√		√		√	√
City Gas	√		√				√	√
Industrial gas	√		√		√			√
Nitrogen	√		√				√	√
Refined Oil	√	√	√				√	√
Water	√	√	√	√	√	√	√	√
Steam	√	√	√		×	√	√	√
Drinking Water	√	√	√	√		√		√
Sea	√		√	√	√	√	√	√
Industrial Waste Water			√				√	√
Gasoline	√	√	√			×	√	√
Kerosene	√	√	√	√	√	×	√	√
Diesel oil	√	×	√	√	√	×	√	√
Milk	√	√	√	√	√	√	√	√
Wine	√	√	√	√	√	√	√	√
Alcohol	√	√	√		√	×		√
Acetylene	√	√	√		√	×	√	√
Alcohol,Ethyl(Ethanol)	√	√	√		√	×	√	√
Acetone	√	√	√		×	√	×	√
Ammonia					×			√
Toluene	√	√	√			×	√	√
Xylene	√	√	√			×	√	√
Propane	√	√	√			×	√	√
Methane	√	√	√		√	×	√	√
Sulfur Dioxide	√	√	√				√	√
Sodium Hydroxide<20%		√	√		√	×		√
Nitric Acid<10%			√				√	√
Sulfuric Acid<20%							√	√
Hydrochloric Acid10%								√
Acetic Acid	√	√	√		√	×	√	√

Solenoid valves Numbering System For Order

Solenoid Valves Model Numbering System for Order

Position description	1	2	3	4	5	6	7	8	9	10
	Valve Series	Mode of Operation	Coil Type	Coil Class	Voltage	Seal Material	Body Material	Pipe Size	Orifice (mm)	Options
E.G.	SLP	1	D	F	02	N	1	E	20	□
	Others eg: ZS、 SLA、 SLG、 SLE、 SLV etc.	1: Normally Closed 2: Normally Open	D: DIN Standard Connections, Fully Encapsulated A=Metallic Housing DIN standard N: Lead Wires, Water-tight, Fully Encapsulated U= Under water W=Metallic Housing lead wires X: Explosion-proof S: NASS Coil M: SM Coil	F:F Class H:H Class	02=AC220V AC230V 01=AC110V AC120V 03=AC36V 04=AC48V 05=AC24V 06=AC12V 07=24-220V AC/DC 08=AC380V 09=DC9-20V 12=DC12V 13=DC24V 14=DC110V 15=DC220V 16=DC36V 17=DC48V 18=DC6V 19=DC5V	N= NBR V= VITON E= EPDM T= Teflon G= Silicone R= HNBR K= PEEK P= PU	1=Forged Brass 2=Cast Brass 3= SS316 4= SS304 5= Stainless steel 6=Cast iron 7=Plastic 8=Aluminum 9=Forged Brass 10=PMMA 11=Lead-free Brass 12=Bronze	A=1/8" B=1/4" C=3/8" D=1/2" E=3/4" G=1" H=1 1/4" J=1 1/2" K=2" L=2 1/2" M= 3" N= 4" F= Flange Connection	01=1.0 02=2.0 03=3.0 04=4.0 05=5.0 06=6.0 08=8.0 09=9.0 10=10.0 13=13.0 15=15.0 16=16.0 20=20.0 25=25.0 32=32.0 35=35.0 40=40.0 50=50.0 65=65.0 80=80.0 100=100.0 C0=0.8 C1=1.2 C2=1.5 C3=2.5 C4=3.2 C5=3.5 C6=4.5 C7=5.5 C8=7.5 C9=10.5	M= Manual override L= Neon Lamp K= Mounting Bracket N=NPT P=PT R=RC T=Timer Y=Sensor YC=No signal feedback

Flow Calculation Method Seal Material Review

Flow calculation method

1、Liquid(volume)

$$Q=14.28Cv\ \frac{\sqrt{P_1-P_2}}{\sqrt{G}}$$

Note:Don′ t consider for viscosity influence less than 20mm²/S

2、Gas (Volume)

$$Q=198.3CvP_1\cdot\frac{1}{\sqrt{G}}\left(P2\leq\frac{P1}{1.89}\right)$$

$$Q=396.6v\sqrt{\triangle P\cdot P2}\cdot\frac{1}{\sqrt{G}}\left(P2>\frac{P1}{1.89}\right)$$

Note: Standard atmospheric conditions:760mmHg, 15.6℃

Q:L/Min

Note:

P1: Inlet pressure kgf/cm²

P2: Outlet pressure kgf/cm²

△P: P1-P2

G: Specific Gravity (Water=1, Air=1)

Cv: Flow Coefficient Cv≈1.16x Kv Kv≈0.853x Cv

Commonly Used Pressure Units Conversion

1kgf/cm²=1bar=0.1MPa=100KPa=14.5PSI

Commonly Used Seal material review

(In different places of the dynamic situation use, so relevant data is only for reference)

1、NBR

Main used for diaphragm, O rings and seal material, Suitable for air, gas, liquid water, light oil etc. Fluid temperature -18℃ to 80℃

2、EPDM

Main used the place the Temperature range above NBR, (Such as hot water.low pressure steam) suitable for the most of gas, liquid water.Fluid temperature -20℃ to 139℃

3、VITON

Main used the place where NBR、 EPDM can not be applied. Suitable for most of the gas, liquid water, gasoline, solvent etc. Fluid temperature -20℃ to 169℃

4、TEFLON

Almost it can suitable for all fluid media. But as dynamic seal material, it will be leakage especially the media is gas.

ZS compact series 2/2-way direct acting solenoid valve · normally closed

Solenoid Valves Numbering System for Order

Position description	1	2	3	4	5	6	7	8	9	10
	Valve Series	Mode of Operation	Coil Type	Coil Class	Voltage	Seal Material	Body Material	Pipe Size	Orifice (mm)	Options
E.G.	ZS	1	D	F	02	N	1	E	20	□
	ZS Series	1: Normally Closed 2: Normally Open	D: DIN Standard Connections, Fully Encapsulated A: Metallic Housing, DIN Standard U= Under water N= Lead wires water-tight Fully Euca-psulated (for orifice under ϕ 25mm only) X: Explosion-proof S:NASS Coil M: SM Coil	F: F Class H: H Class	02=AC220V AC230V 01=AC110V AC120V 03=AC36V 04=AC48V 05=AC24V 07=24-220V AC/DC 08=AC380V 12=DC12V 13=DC24V	N=NBR V=VITON E=EPDM (for orifice under ϕ 25mm only) G=Silicone	1=Forged Brass 4= SS304 3= Ss316	A=1/8" B=1/4" C=3/8" D=1/2"	C3=2.5 03=3.0 04=4.0 05=5.0 06=6.0 C8=7.5 04=4.0 05=5.0 06=6.0 C8=7.5 09=9.0 10=10.0	M= Manual Override L= Neon lamp N= NPT pipe size K= Mounting Bracket Y=Sensor
							7= Plastic	D=1/2" E=3/4" G=1" J=1 1/2"	15=15.0 20=20.0 25=25.0 40=40.0	
							9=Forged Brass 4=SS304 3=SS316	B=1/4 " C=3/8 " D=1/2 " E=3/4 " G=1 "	10=10.0 13=13.0 15=16.0 19=20.0	
							1= Forged Brass 2= Casr Brass 4= SS304 3=SS316	C=3/8" D=1/2"	16=16.0	
								E=3/4"	20=20.0	
								G=1"	20=20.0 25=25.0	
								H=1 1/4"	32=32.0	
								J=1 1/2"	32=32.0 40=40.0	
								K=2"	40=40.0 50=50.0	
							4=SS304 3=SS316	F= Flange Connection	15=15.0 20=20.0 25=25.0 32=32.0 40=40.0 50=50.0 65=65.0 80=80.0 100=100.0	

ZS compact series 2/2-way direct acting solenoid valve · normally closed

1. 2/2-Way normally closed solenoid valve, Closed when de-energized, open when energized
2. Body material: Brass, SS304, SS316(Special made)
2. Max. Allowable pressure 16kgf/cm^2; Fluids Temp: 0℃~120℃
3. Serialized products, small in size, large flow rate, widely use
4. Flow as the arrow, mounts in any position; Best position is solenoid vertical and upright direction.
5. Voltage: 220VAC/230VAC/240VAC/110VAC/24C 50/60HZ 24VDC/12VDC; Voltage Tolerance: +10% to -10% applicable voltage
6. Coil can fix Germany Nass Coil, for orifice under DN25 only
7. This series valves are offered NBR、VITON、EPDM etc for Seals and diaphragm to provide on-off control of various fluids.
8. Coil can fix SM Coil. AC 220V/AC110V/AC24V/DC24V

Normally Closed **De-energized**
Closed

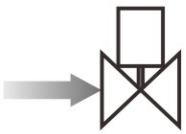

Energized
Open



External Dimensions Chart

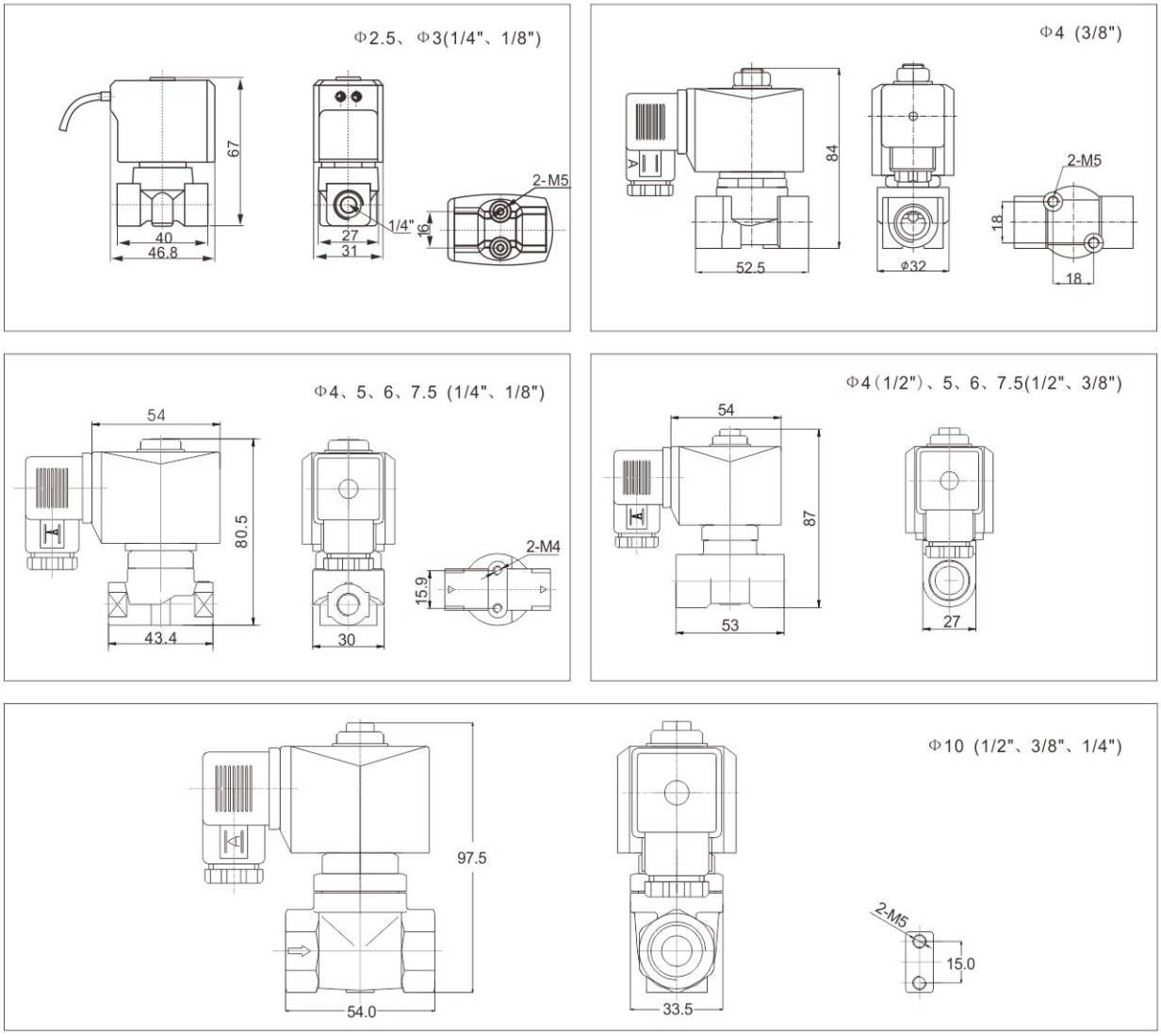

ZS compact series 2/2-way direct acting solenoid valve · normally closed







Valve Selection List

Pipe Conn -ection	Orifice mm	CV Factor	Operating pressure differential (kgf/cm²) Min.	Max. Air Gas AC	Max. Air Gas DC	Max. Water Hot water Liquids AC	Max. Water Hot water Liquids DC	Max. Light oil ≤ 20CST AC	Max. Light oil ≤ 20CST DC	Max. fluids Temp. ℃	Coil Type	Power consumption VA AC 220V	Power consumption W DC 24V	Coil Class	Model Code Follows Voltage are 220VAC Body material: Forged brass	Model Code Follows Voltage are 220VAC Body material: SS304	Weight (KG)
1/8″ Only N05 coil	2.5	0.23	0	7	5	7	5	7	5	80	N	13	8.5	F	ZS1NF02N1AC3	ZS1NF02N4AC3	0.35
	2.5	0.23	0	7	5	7	5			120	N	13	8.5	F	ZS1NF02E1AC3	ZS1NF02E4AC3	0.35
	2.5	0.23	0	7	5	7	5	7	5	120	N	13	8.5	F	ZS1NF02V1AC3	ZS1NF02V4AC3	0.35
	3	0.3	0	5	4	5	4	5	4	80	N	13	8.5	F	ZS1NF02N1A03	ZS1NF02N4A03	0.35
	3	0.3	0	5	4	5	4			120	N	13	8.5	F	ZS1NF02E1A03	ZS1NF02E4A03	0.35
	3	0.3	0	5	4	5	4	5	4	120	N	13	8.5	F	ZS1NF02V1A03	ZS1NF02V4A03	0.35
1/8″	4	0.6	0	8	5	8	5	5	5	80	D	20	20	F	ZS1DF02N1A04	ZS1DF02N4A04	0.46
	4	0.6	0	8	5	8	5			120	D	20	20	F	ZS1DF02E1A04	ZS1DF02E4A04	0.46
	4	0.6	0	8	5	8	5	5	5	120	D	20	20	F	ZS1DF02V1A04	ZS1DF02V4A04	0.46
	5	0.65	0	6	4	6	4	4	3	80	D	20	20	F	ZS1DF02N1A05	ZS1DF02N4A05	0.46
	5	0.65	0	6	4	6	4			120	D	20	20	F	ZS1DF02E1A05	ZS1DF02E4A05	0.46
	5	0.65	0	6	4	6	4	4	3	120	D	20	20	F	ZS1DF02V1A05	ZS1DF02V4A05	0.46
	6	0.8	0	4	2.5	4	2.5	3	2.5	80	D	20	20	F	ZS1DF02N1A06	ZS1DF02N4A06	0.46
	6	0.8	0	4	2.5	4	2.5			120	D	20	20	F	ZS1DF02E1A06	ZS1DF02E4A06	0.46
	6	0.8	0	4	2.5	4	2.5	3	2.5	120	D	20	20	F	ZS1DF02V1A06	ZS1DF02V4A06	0.46
	7.5	1.0	0	1.5	1	1.5	1	1.5	1	80	D	20	20	F	ZS1DF02N1AC8	ZS1DF02N4AC8	0.45
	7.5	1.0	0	1.5	1	1.5	1			120	D	20	20	F	ZS1DF02E1AC8	ZS1DF02E4AC8	0.45
	7.5	1.0	0	1.5	1	1.5	1	1.5	1	120	D	20	20	F	ZS1DF02V1AC8	ZS1DF02V4AC8	0.45

ZS compact series 2/2-way direct acting solenoid valve · normally closed



Valve Selection List

Pipe Connection	Orifice mm	CV Factor	Operating pressure differential (kgf/cm²) Min.	Max. Air Gas AC	Max. Air Gas DC	Max. Water Hot water Liquids AC	Max. Water Hot water Liquids DC	Max. Light oil ≤20CST AC	Max. Light oil ≤20CST DC	Max. fluids Temp. ℃	Coil Type	Power consumption VA AC 220V	Power consumption W DC 24V	Coil Class	Model Code Follows Voltage are 220VAC Body material: Forged brass	Model Code Follows Voltage are 220VAC Body material: SS304	Weight (KG)
1/4″ Only N05 coil	2.5	0.23	0	7	5	7	5	7	5	80	N	13	8.5	F	ZS1NF02N1BC3	ZS1NF02N4BC3	0.34
	2.5	0.23	0	7	5	7	5			120	N	13	8.5	F	ZS1NF02E1BC3	ZS1NF02E4BC3	0.34
	2.5	0.23	0	7	5	7	5	7	5	120	N	13	8.5	F	ZS1NF02V1BC3	ZS1NF02V4BC3	0.34
	3	0.3	0	5	4	5	4	5	4	80	N	13	8.5	F	ZS1NF02N1B03	ZS1NF02N4B03	0.34
	3	0.3	0	5	4	5	4			120	N	13	8.5	F	ZS1NF02E1B03	ZS1NF02E4B03	0.34
	3	0.3	0	5	4	5	4	5	4	120	N	13	8.5	F	ZS1NF02V1B03	ZS1NF02V4B03	0.34
1/4″	4	0.6	0	8	5	8	5	5	5	80	D	20	20	F	ZS1DF02N1B04	ZS1DF02N4B04	0.46
	4	0.6	0	8	5	8	5			120	D	20	20	F	ZS1DF02E1B04	ZS1DF02E4B04	0.46
	4	0.6	0	8	5	8	5	5	5	120	D	20	20	F	ZS1DF02V1B04	ZS1DF02V4B04	0.46
	5	0.65	0	6	4	6	4	4	3	80	D	20	20	F	ZS1DF02N1B05	ZS1DF02N4B05	0.45
	5	0.65	0	6	4	6	4			120	D	20	20	F	ZS1DF02E1B05	ZS1DF02E4B05	0.45
	5	0.65	0	6	4	6	4	4	3	120	D	20	20	F	ZS1DF02V1B05	ZS1DF02V4B05	0.45
	6	0.8	0	4	2.5	4	2.5	3	2.5	80	D	20	20	F	ZS1DF02N1B06	ZS1DF02N4B06	0.45
	6	0.8	0	4	2.5	4	2.5			120	D	20	20	F	ZS1DF02E1B06	ZS1DF02E4B06	0.45
	6	0.8	0	4	2.5	4	2.5	3	2.5	120	D	20	20	F	ZS1DF02V1B06	ZS1DF02V4B06	0.45
	7.5	1.0	0	1.5	1	1.5	1	1.5	1	80	D	20	20	F	ZS1DF02N1BC8	ZS1DF02N4BC8	0.44
	7.5	1.0	0	1.5	1	1.5	1			120	D	20	20	F	ZS1DF02E1BC8	ZS1DF02E4BC8	0.44
	7.5	1.0	0	1.5	1	1.5	1	1.5	1	120	D	20	20	F	ZS1DF02V1BC8	ZS1DF02V4BC8	0.44

ZS compact series 2/2-way direct acting solenoid valve · normally closed





Valve Selection List

Pipe Conn -ection	Orifice	CV	Operating pressure differential (kgf/cm²)							Max. fluids Temp. ℃	Coil Type	Power consumption		Coil Class	Model Code Follows Voltage are 220VAC		Weight (KG)
			Min.	Max.								VA	W		Body material		
				Air Gas		Water Hot water Liquids		Light oil ≤ 20CST				AC 220V	DC 24V				
	mm	Factor		AC	DC	AC	DC	AC	DC						Forged brass	SS304	
3/8″	4	0.6	0	8	5	8	5	5	5	80	D	20	20	F	ZS1DF02N1C04	ZS1DF02N4C04	0.6
	4	0.6	0	8	5	8	5			120	D	20	20	F	ZS1DF02E1C04	ZS1DF02E4C04	0.6
	4	0.6	0	8	5	8	5	5	5	120	D	20	20	F	ZS1DF02V1C04	ZS1DF02V4C04	0.6
	5	0.65	0	6	4	6	4	4	3	80	D	20	20	F	ZS1DF02N1C05	ZS1DF02N4C05	0.51
	5	0.65	0	6	4	6	4			120	D	20	20	F	ZS1DF02E1C05	ZS1DF02E4C05	0.51
	5	0.65	0	6	4	6	4	4	3	120	D	20	20	F	ZS1DF02V1C05	ZS1DF02V4C05	0.51
	6	0.8	0	4	2.5	4	2.5	3	2.5	80	D	20	20	F	ZS1DF02N1C06	ZS1DF02N4C06	0.51
	6	0.8	0	4	2.5	4	2.5			120	D	20	20	F	ZS1DF02E1C06	ZS1DF02E4C06	0.51
	6	0.8	0	4	2.5	4	2.5	3	2.5	120	D	20	20	F	ZS1DF02V1C06	ZS1DF02V4C06	0.51
	7.5	1.0	0	1.5	1	1.5	1	1.5	1	80	D	20	20	F	ZS1DF02N1CC8	ZS1DF02N4CC8	0.49
	7.5	1.0	0	1.5	1	1.5	1			120	D	20	20	F	ZS1DF02E1CC8	ZS1DF02E4CC8	0.49
	7.5	1.0	0	1.5	1	1.5	1	1.5	1	120	D	20	20	F	ZS1DF02V1CC8	ZS1DF02V4CC8	0.49
	10	1.6	0	0.5	0.3	0.5	0.3	0.4	0.2	80	D	20	20	F	ZS1DF02N1C10	ZS1DF02N4C09	0.62
	10	1.6	0	0.5	0.3	0.5	0.3			120	D	20	20	F	ZS1DF02E1C10	ZS1DF02E4C09	0.62
	10	1.6	0	0.5	0.3	0.5	0.3	0.4	0.2	120	D	20	20	F	ZS1DF02V1C10	ZS1DF02V4C09	0.62
1/2″	4	0.6	0	8	5	8	4	4	3	80	D	20	20	F	ZS1DF02N1D04	ZS1DF02N4D04	0.48
	4	0.6	0	8	5	8	4			120	D	20	20	F	ZS1DF02E1D04	ZS1DF02E4D04	0.48
	4	0.6	0	8	5	8	5	5	5	120	D	20	20	F	ZS1DF02V1D04	ZS1DF02V4D04	0.48
	5	0.65	0	6	4	6	5	5	5	80	D	20	20	F	ZS1DF02N1D05	ZS1DF02N4D05	0.48
	5	0.65	0	6	4	6	5			120	D	20	20	F	ZS1DF02E1D05	ZS1DF02E4D05	0.48
	5	0.65	0	6	4	6	4	4	3	120	D	20	20	F	ZS1DF02V1D05	ZS1DF02V4D05	0.48
	6	0.8	0	4	2.5	4	2.5	3	2.5	80	D	20	20	F	ZS1DF02N1D06	ZS1DF02N4D06	0.46
	6	0.8	0	4	2.5	4	2.5			120	D	20	20	F	ZS1DF02E1D06	ZS1DF02E4D06	0.46
	6	0.8	0	4	2.5	4	2.5	3	2.5	120	D	20	20	F	ZS1DF02V1D06	ZS1DF02V4D06	0.46
	7.5	1.0	0	1.5	1	1.5	1	1.5	1	80	D	20	20	F	ZS1DF02N1DC8	ZS1DF02N4DC8	0.45
	7.5	1.0	0	1.5	1	1.5	1			120	D	20	20	F	ZS1DF02E1DC8	ZS1DF02E4DC8	
	7.5	1.0	0	1.5	1	1.5	1	1.5	1	120	D	20	20	F	ZS1DF02V1DC8	ZS1DF02V4DC8	
	10	1.65	0	0.5	0.3	0.5	0.3	0.4	0.2	80	D	20	20	F	ZS1DF02N1D10	ZS1DF02N4D09	0.59
	10	1.65	0	0.5	0.3	0.5	0.3			120	D	20	20	F	ZS1DF02E1D10	ZS1DF02E4D09	
	10	1.65	0	0.5	0.3	0.5	0.3	0.4	0.2	120	D	20	20	F	ZS1DF02V1D10	ZS1DF02V4D09	

ZS 2/2-way direct acting solenoid valve · normally closed

1：2/2 way normally closed , closed when de-energized, open when energized
2：Max pressure tolerance：25 kgf/cm^2
3：Working pressure ： 0 ~20 kgf/cm^2
4：Ambient temp ： 0~65 ℃
5：Flow as the arrow ,mounts in any position ; best position is solenoid vertical and upright direction
6：1/4"~1" connection size ,orifice Φ10mm~Φ20mm， can be widely used in the corresponding flow and pressure system , replace the same connection size but big orifice valve , can save a lot of cost
7：Voltage ： AC220V/230V/240V/110V/24V 50/60HZ DC24V/12V
8：Seals ： Can choose NBR、EPDM、VITON to fit the on/off control of different media；
9：Body：Brass
10：Coil can fix SM Coil. AC 220V/AC110V/AC24V/DC24V



External Dimensions Chart

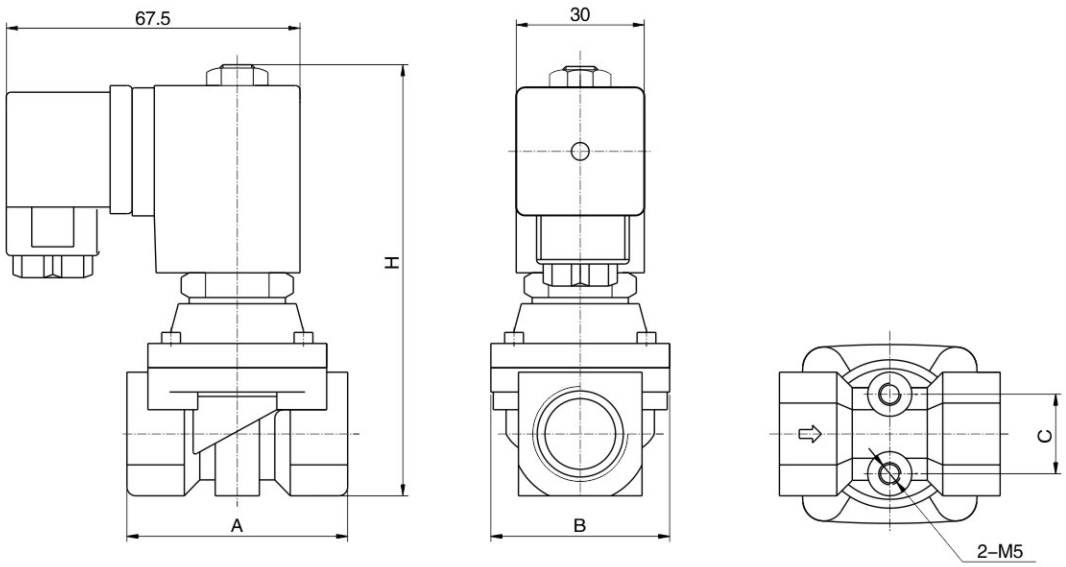

Orifice(mm)	Pipe size G	A	B	C	H
Φ10	1/4"	50	40.5	18	98
	3/8"	50	40.5	18	98
	1/2"	50	40.5	18	98
Φ13	3/8"	55	43	18	98
	1/2"	55	43	18	98
Φ16	1/2"	60	49	25	105
	3/4"	60	49	25	105
Φ20	3/4"	72	60	28	113
	1"	72	60	28	113

ZS 2/2-way direct acting solenoid valve · normally closed

Valve Selection List

Pipe Conn -ection	Orifice mm	CV Factor	Operating pressure differential (kgf/cm²) Max. Min.	Air Gas AC	Air Gas DC	Water Hot water Lliquid AC	Water Hot water Lliquid DC	Light oil AC	Light oil DC	Max. Temp. ℃	Coil Type	Power consumption VA AC 220V	Power consumption W DC 24V	Coil Class	Model Code Follows Voltage are 220VAC50/60HZ	Weight (KG)
1/4"	10	1.9	0	20	16	20	16	20	16	80	D	22	13	F	ZS1DF02N9B10	0.55
	10	1.9	0	20	16	20	16			120	D	22	13	F	ZS1DF02E9B10	0.55
	10	1.9	0	20	16	20	16	20	16	120	D	22	13	F	ZS1DF02V9B10	0.55
3/8"	10	2.4	0	20	16	20	16	20	16	80	D	22	13	F	ZS1DF02N9C10	0.54
	10	2.4	0	20	16	20	16			120	D	22	13	F	ZS1DF02E9C10	0.54
	10	2.4	0	20	16	20	16	20	16	120	D	22	13	F	ZS1DF02V9C10	0.54
	13	3.1	0	16	12	16	12	16	12	80	D	22	13	F	ZS1DF02N9C13	0.56
	13	3.1	0	16	12	16	12			120	D	22	13	F	ZS1DF02E9C13	0.56
	13	3.1	0	16	12	16	12	16	12	120	D	22	13	F	ZS1DF02V9C13	0.56
1/2"	10	2.4	0	20	16	20	16	20	16	80	D	22	13	F	ZS1DF02N9D10	0.53
	10	2.4	0	20	16	20	16			120	D	22	13	F	ZS1DF02E9D10	0.53
	10	2.4	0	20	16	20	16	20	16	120	D	22	13	F	ZS1DF02V9D10	0.53
	13	3.1	0	16	12	16	12	16	12	80	D	22	13	F	ZS1DF02N9D13	0.55
	13	3.1	0	16	12	16	12			120	D	22	13	F	ZS1DF02E9D13	0.55
	13	3.1	0	16	12	16	12	16	12	120	D	22	13	F	ZS1DF02V9D13	0.55
	16	4.0	0	12	10	12	10	12	10	80	D	22	13	F	ZS1DF02N9D15	0.81
	16	4.0	0	12	10	12	10			120	D	22	13	F	ZS1DF02E9D15	0.81
	16	4.0	0	12	10	12	10	12	10	120	D	22	13	F	ZS1DF02V9D15	0.81
3/4"	16	4.0	0	12	10	12	10	12	10	80	D	22	13	F	ZS1DF02N9E15	0.8
	16	4.0	0	12	10	12	10			120	D	22	13	F	ZS1DF02E9E15	0.8
	16	4.0	0	12	10	12	10	12	10	120	D	22	13	F	ZS1DF02V9E15	0.8
	20	5.6	0	10	10	10	10	10	10	80	D	22	13	F	ZS1DF02N9E19	1.1
	20	5.6	0	10	10	10	10			120	D	22	13	F	ZS1DF02E9E19	1.1
	20	5.6	0	10	10	10	10	10	10	120	D	22	13	F	ZS1DF02V9E19	1.1
1"	20	5.6	0	10	10	10	10	10	10	80	D	22	13	F	ZS1DF02N9G19	1.0
	20	5.6	0	10	10	10	10			120	D	22	13	F	ZS1DF02E9G19	1.0
	20	5.6	0	10	10	10	10	10	10	120	D	22	13	F	ZS1DF02V9G19	1.0

ZS 2/2-way direct acting solenoid valve · normally closed

1. 2/2 way Normally Closed,closed when de-energized, open when energized.
2. Max Pressure Tolerance: 25kgf/cm^2
3. Working Pressure:0~20kgf/cm^2
4. Ambient Temp.:0~65℃
5. Flow as the arrow, mounts in any position; best position is solenoid vertiacl and upright direction.
6. 1/4"~1" connection size, orifice Φ10mm~Φ20mm,can be widely used in the corresponding flow and pressure system,replace the same connection size but big orifice valve,can save a lot of cost.
7. Voltage: AC220V/230V/240V/110V/24V 50/60HZ DC24V/12V
8. Seals: can choose NBR, EPDM, VITONto fit the on/off control of different media.
9. Body: SS304
10. Coil can fix SM Coil. AC 220V/AC110V/AC24V/DC24V





External Dimensions:

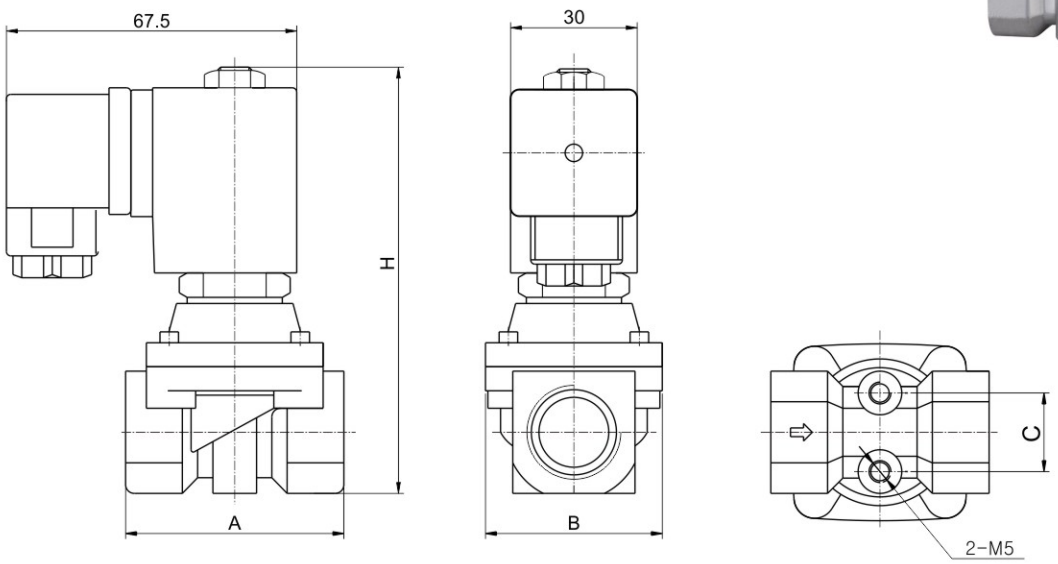

Orifice (mm)	Pipe size G	A	B	C	H
Φ10	1/4"	50	40.5	18	98
	3/8"	50	40.5	18	98
	1/2"	50	40.5	18	98
Φ13	3/8"	55	43	18	98
	1/2"	55	43	18	98
Φ16	1/2"	60	49	25	105
	3/4"	60	49	25	105
Φ20	3/4"	72	60	28	113
	1"	72	60	28	113

ZS 2/2-way direct acting solenoid valve · normally closed

Valve Selection List

Pipe Conn -ection	Orifice mm	CV Factor	Operating pressure differential (kgf/cm²) Max. Min.	Air Gas AC	Air Gas DC	Water Hot water Lliquid AC	Water Hot water Lliquid DC	Light oil AC	Light oil DC	Max. Temp. ℃	Coil Type	Power consumption VA AC 220V	Power consumption W DC 24V	Coil Class	Model Code Follows Voltage are 220VAC50/60HZ	Weight (KG)
1/4"	10	1.9	0	20	16	20	16	20	16	80	D	22	13	F	ZS1DF02N4B10	0.55
	10	1.9	0	20	16	20	16			120	D	22	13	F	ZS1DF02E4B10	0.55
	10	1.9	0	20	16	20	16	20	16	120	D	22	13	F	ZS1DF02V4B10	0.55
3/8"	10	2.4	0	20	16	20	16	20	16	80	D	22	13	F	ZS1DF02N4C10	0.54
	10	2.4	0	20	16	20	16			120	D	22	13	F	ZS1DF02E4C10	0.54
	10	2.4	0	20	16	20	16	20	16	120	D	22	13	F	ZS1DF02V4C10	0.54
	13	3.1	0	16	12	16	12	16	12	80	D	22	13	F	ZS1DF02N4C13	0.56
	13	3.1	0	16	12	16	12			120	D	22	13	F	ZS1DF02E4C13	0.56
	13	3.1	0	16	12	16	12	16	12	120	D	22	13	F	ZS1DF02V4C13	0.56
1/2"	10	2.4	0	20	16	20	16	20	16	80	D	22	13	F	ZS1DF02N4D10	0.53
	10	2.4	0	20	16	20	16			120	D	22	13	F	ZS1DF02E4D10	0.53
	10	2.4	0	20	16	20	16	20	16	120	D	22	13	F	ZS1DF02V4D10	0.53
	13	3.1	0	16	12	16	12	16	12	80	D	22	13	F	ZS1DF02N4D13	0.55
	13	3.1	0	16	12	16	12			120	D	22	13	F	ZS1DF02E4D13	0.55
	13	3.1	0	16	12	16	12	16	12	120	D	22	13	F	ZS1DF02V4D13	0.55
	16	4.0	0	12	10	12	10	12	10	80	D	22	13	F	ZS1DF02N4D15	0.76
	16	4.0	0	12	10	12	10			120	D	22	13	F	ZS1DF02E4D15	0.76
	16	4.0	0	12	10	12	10	12	10	120	D	22	13	F	ZS1DF02V4D15	0.76
3/4"	16	4.0	0	12	10	12	10	12	10	80	D	22	13	F	ZS1DF02N4E15	0.74
	16	4.0	0	12	10	12	10			120	D	22	13	F	ZS1DF02E4E15	0.74
	16	4.0	0	12	10	12	10	12	10	120	D	22	13	F	ZS1DF02V4E15	0.74
	20	5.6	0	10	10	10	10	10	10	80	D	22	13	F	ZS1DF02N4E19	1.0
	20	5.6	0	10	10	10	10			120	D	22	13	F	ZS1DF02E4E19	1.0
	20	5.6	0	10	10	10	10	10	10	120	D	22	13	F	ZS1DF02V4E19	1.0
1"	20	5.6	0	10	10	10	10	10	10	80	D	22	13	F	ZS1DF02N4G19	0.9
	20	5.6	0	10	10	10	10			120	D	22	13	F	ZS1DF02E4G19	0.9
	20	5.6	0	10	10	10	10	10	10	120	D	22	13	F	ZS1DF02V4G19	0.9

ZS 2/2-way large diameter direct acting solenoid valve · normally closed

1: 2-Way normally closed solenoid valve, Closed when de-energized, open when energized.

2: Serialized products, small in size, large flow rate, widely use

3: Body material: forged brass.cast brass (for orifice Φ32、40、50 olny)

4: Ambient Temp. 0℃~65℃,Fluids Temp:0℃~120℃.

5: Flow as the arrow, mounts in any position; Best position is Solenoid vertical and upright direction.

6: Voltage: 220VAC/230VAC/240VAC/110VAC/24VAC 50/60HZ 24VDC/12VDC; Voltage Tolerance: +10% to -10% applicable voltage

7: Coil can fix Germany Nass Coil, for orifice under ϕ16~25mm only.

8: This series valves are offered NBR、VITON、EPDM etc for Seals and diaphragm to provide on-off control of various fluids.

9: Coil can fix SM Coil below DN25. AC 220V/AC110V/AC24V/DC24V



External Dimensions Chart

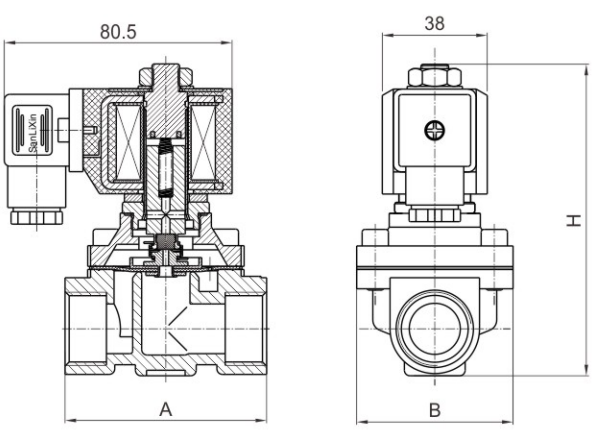

Φ16~Φ25

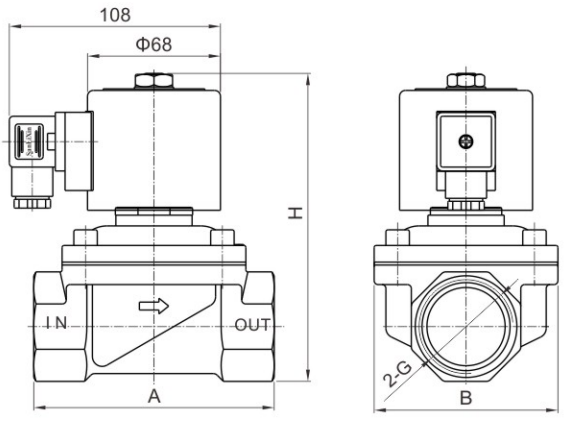

Φ32~Φ50

Flow Chart

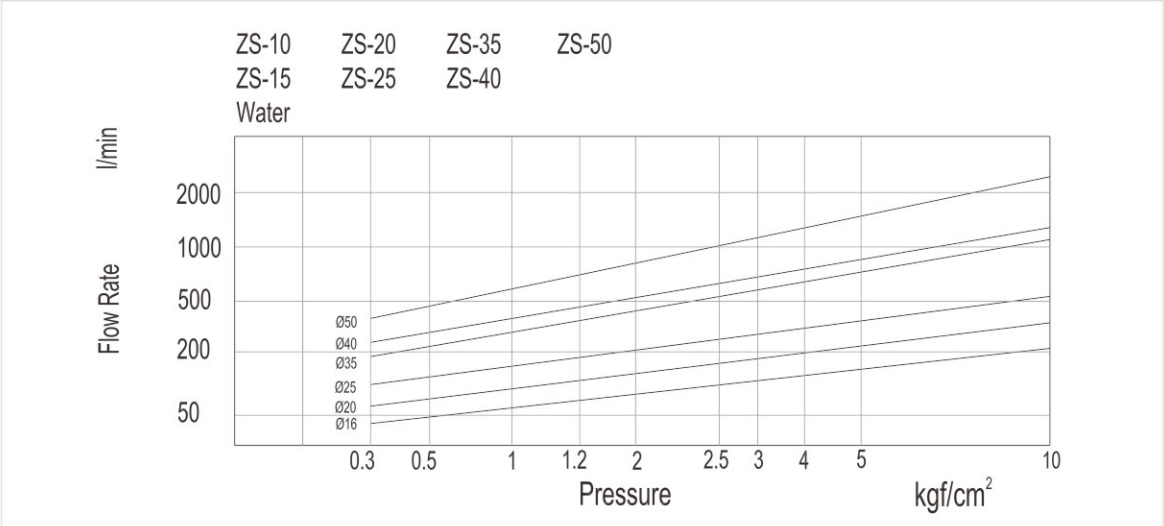

ZS 2/2-way large diameter direct acting solenoid valve · normally closed

Valve Selection List

Pipe Conn -ection	Orifice mm	CV Factor	Operating pressure differential (kgf/cm²) Min.	Max. Air Gas AC	Max. Air Gas DC	Max. Water Hot water Lliquid AC	Max. Water Hot water Lliquid DC	Max. Light oil AC	Max. Light oil DC	Max. Temp. ℃	Coil F Class Type	Power consumption VA AC 220V	Power consumption W DC 24V	External Dimensions Length x Width x Height Ax B x H	Model Code Follows Voltage are 220VAC50/60HZ	Weight (KG)
3/8"	16	4.8	0	10	6	10	6	7	4	80	D	20	20	69×57×106	ZS1DF02N1C16	0.9
	16	4.8	0	10	6	10	6			120	D	20	20	69×57×106	ZS1DF02E1C16	0.9
	16	4.8	0	10	6	10	6	7	4	120	D	20	20	69×57×106	ZS1DF02V1C16	0.9
	16	4.8	0			3	3			120	D	20	20	69×57×106	ZS1DF02G1C16	0.9
1/2"	16	4.8	0	10	6	10	6	7	4	80	D	20	20	69×57×106	ZS1DF02N1D16	0.9
	16	4.8	0	10	6	10	6			120	D	20	20	69×57×106	ZS1DF02E1D16	0.9
	16	4.8	0	10	6	10	6	7	4	120	D	20	20	69×57×106	ZS1DF02V1D16	0.9
	16	4.8	0			3	3			120	D	20	20	69×57×106	ZS1DF02G1D16	0.9
3/4"	20	7.6	0	10	6	10	6	7	4	80	D	20	20	73×57×113	ZS1DF02N1E20	1.08
	20	7.6	0	10	6	10	6			120	D	20	20	73×57×113	ZS1DF02E1E20	1.08
	20	7.6	0	10	6	10	6	7	4	120	D	20	20	73×57×113	ZS1DF02V1E20	1.08
	20	7.6	0			3	3			120	D	20	20	73×57×113	ZS1DF02G1E20	1.08
1"	20	7.6	0	10	6	10	6	7	4	80	D	20	20	80×62×117	ZS1DF02N1G20	1.2
	20	7.6	0	10	6	10	6			120	D	20	20	80×62×117	ZS1DF02E1G20	1.2
	20	7.6	0	10	6	10	6	7	4	120	D	20	20	80×62×117	ZS1DF02V1G20	1.2
	20	7.6	0			3	3			120	D	20	20	80×62×117	ZS1DF02G1G20	1.2
	25	12	0	10	6	10	6	7	4	80	D	20	20	99×77×121	ZS1DF02N1G25	1.4
	25	12	0	10	6	10	6			120	D	20	20	99×77×121	ZS1DF02E1G25	1.4
	25	12	0	10	6	10	6	7	4	120	D	20	20	99×77×121	ZS1DF02V1G25	1.4
	25	12	0			3	3			120	D	20	20	99×77×121	ZS1DF02G1G25	1.4
1 1/4"	32	24	0	10	6	10	6	7	4	80	D	57	45	112×86.5×148	ZS1DF02N2H32	2.5
	32	24	0	10	6	10	6			120	D	57	45	112×86.5×148	ZS1DF02E2H32	2.5
	32	24	0	10	6	10	6	7	4	120	D	57	45	112×86.5×148	ZS1DF02V2H32	2.5
	32	24	0	10	6	10	6	7	4	80	D	57	45	112×86.5×148	ZS1DF02N1H32	2.7
	32	24	0	10	6	10	6			120	D	57	45	112×86.5×148	ZS1DF02E1H32	2.7
	32	24	0	10	6	10	6	7	4	120	D	57	45	112×86.5×148	ZS1DF02V1H32	2.7
1 1/2"	32	24	0	10	6	10	6	7	4	80	D	57	45	120×86.5×158	ZS1DF02N1J32	2.8
	32	24	0	10	6	10	6			120	D	57	45	120×86.5×158	ZS1DF02E1J32	2.8
	32	24	0	10	6	10	6	7	4	120	D	57	45	120×86.5×158	ZS1DF02V1J32	2.8
	40	29	0	10	6	10	6	7	4	80	D	57	45	123×94×158	ZS1DF02N2J40	2.9
	40	29	0	10	6	10	6			120	D	57	45	123×94×158	ZS1DF02E2J40	2.9
	40	29	0	10	6	10	6	7	4	120	D	57	45	123×94×158	ZS1DF02V2J40	2.9
	40	29	0	10	6	10	6	7	4	80	D	57	45	123×94×158	ZS1DF02N1J40	3.2
	40	29	0	10	6	10	6			120	D	57	45	123×94×158	ZS1DF02E1J40	3.2
	40	29	0	10	6	10	6	7	4	120	D	57	45	123×94×158	ZS1DF02V1J40	3.2
2"	40	29	0	10	6	10	6	7	4	80	D	57	45	130×94×175	ZS1DF02N1K40	3.8
	40	29	0	10	6	10	6			120	D	57	45	130×94×175	ZS1DF02E1K40	3.8
	40	29	0	10	6	10	6	7	4	120	D	57	45	130×94×175	ZS1DF02V1K40	3.8
	50	48	0	10	6	10	6	7	4	80	D	57	45	165×120×181	ZS1DF02N2K50	5.2
	50	48	0	10	6	10	6			120	D	57	45	165×120×181	ZS1DF02E2K50	5.2
	50	48	0	10	6	10	6	7	4	120	D	57	45	165×120×181	ZS1DF02V2K50	5.2
	50	48	0	10	6	10	6	7	4	80	D	57	45	165×120×181	ZS1DF02N1K50	5.4
	50	48	0	10	6	10	6			120	D	57	45	165×120×181	ZS1DF02E1K50	5.4
	50	48	0	10	6	10	6	7	4	120	D	57	45	165×120×181	ZS1DF02V1K50	5.4

ZS 2/2-way large diameter direct acting solenoid valve · normally closed

1: 2-Way normally closed solenoid valve, Closed when de-energized, open when energized.
2: Body material: 304 stainless steel and 316 stainless steel
3: Fluids Temp:0℃~120℃; Ambient Temp. 0℃~65℃
4: Serialized products, small in size, large flow rate, widely use
5: Flow as the arrow, mounts in any position; Best position is Solenoid vertical and upright direction.
6: Voltage: 220VAC/230VAC/240VAC/110VAC/24VAC 50/60HZ 24VDC/12VDC;
Voltage Tolerance: +10% to -10% applicable voltage
7: Coil can fix Germany Nass Coil, for orifice under DN25 only.
8: This series valves are offered NBR、VITON、EPDM etc
for Seals and diaphragm to provide on-off control of various fluids.
9: Coil can fix SM Coil below DN25. AC 220V/AC110V/AC24V/DC24V



External Dimensions Chart

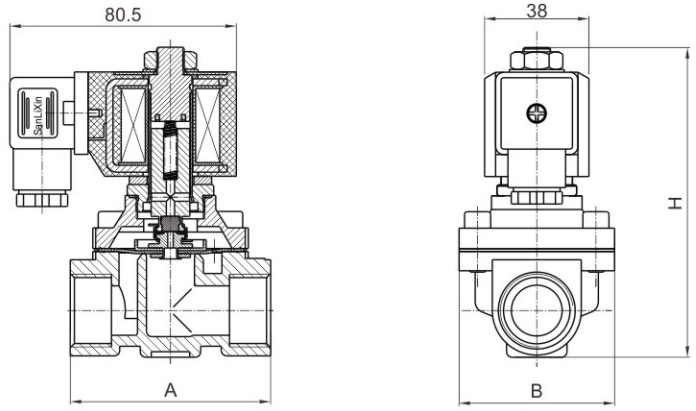

DN15-25mm

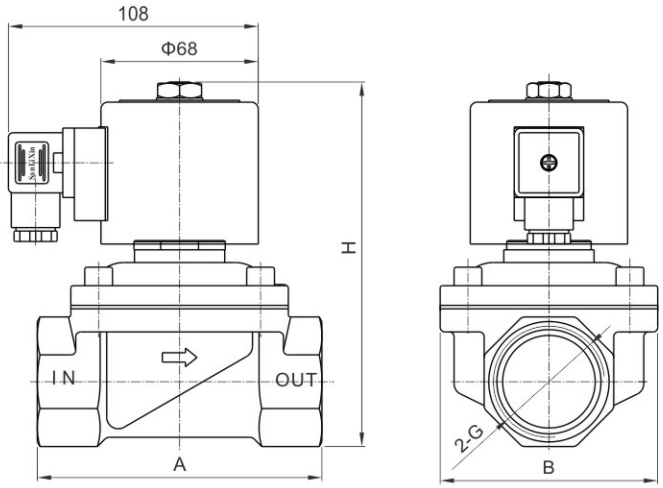

DN32-50mm

ZS 2/2-way large diameter direct acting solenoid valve · normally closed

Valve Selection List (Female Thread)

Pipe Conn -ection	Orifice mm	CV Factor	Operating pressure differential (kgf/cm²) Max.							Max. Temp. ℃	Coil	Power consumption		External Dimensions Length x Width x Height Ax B x H	Model Code Follows Voltage are 220VAC 50/60HZ	Weight (KG)
			Min.	Air Gas		Water Hot water Lliquid		Light oil			F Class Type	VA AC 220V	W DC 24V			
				AC	DC	AC	DC	AC	DC							
3/8"	16	4.8	0	10	6	10	6	7	4	80	D	20	20	69×57×106	ZS1DF02N4C16	0.85
	16	4.8	0	10	6	10	6			120	D	20	20	69×57×106	ZS1DF02E4C16	0.85
	16	4.8	0	10	6	10	6	7	4	120	D	20	20	69×57×106	ZS1DF02V4C16	0.85
	16	4.8	0			3	3			120	D	20	20	69×57×106	ZS1DF02G4C16	0.85
1/2"	16	4.8	0	10	6	10	6	7	4	80	D	20	20	69×57×106	ZS1DF02N4D16	0.8
	16	4.8	0	10	6	10	6			120	D	20	20	69×57×106	ZS1DF02E4D16	0.8
	16	4.8	0	10	6	10	6	7	4	120	D	20	20	69×57×106	ZS1DF02V4D16	0.8
	16	4.8	0			3	3			120	D	20	20	69×57×106	ZS1DF02G4D16	0.8
3/4"	20	7.6	0	10	6	10	6	7	4	80	D	20	20	73×57×113	ZS1DF02N4E20	1.1
	20	7.6	0	10	6	10	6			120	D	20	20	73×57×113	ZS1DF02E4E20	1.1
	20	7.6	0	10	6	10	6	7	4	120	D	20	20	73×57×113	ZS1DF02V4E20	1.1
	20	7.6	0			3	3			120	D	20	20	73×57×113	ZS1DF02G4E20	1.1
1"	20	7.6	0	10	6	10	6	7	4	80	D	20	20	80×62×117	ZS1DF02N4G20	1.20
	20	7.6	0	10	6	10	6			120	D	20	20	80×62×117	ZS1DF02E4G20	1.20
	20	7.6	0	10	6	10	6	7	4	120	D	20	20	80×62×117	ZS1DF02V4G20	1.20
	20	7.6	0			3	3			120	D	20	20	80×62×117	ZS1DF02G4G20	1.20
	25	12	0	10	6	10	6	7	4	80	D	20	20	99×77×121	ZS1DF02N4G25	1.45
	25	12	0	10	6	10	6			120	D	20	20	99×77×121	ZS1DF02E4G25	1.45
	25	12	0	10	6	10	6	7	4	120	D	20	20	99×77×121	ZS1DF02V4G25	1.45
	25	12	0	10	6	3	3			120	D	20	20	99×77×121	ZS1DF02G4G25	1.45
11/4"	32	24	0	10	6	10	6	7	4	80	D	57	45	112×86.5×148	ZS1DF02N4H32	2.3
	32	24	0	10	6	10				120	D	57	45	112×86.5×148	ZS1DF02E4H32	2.3
	32	24	0	10	6	10	6	7	4	120	D	57	45	112×86.5×148	ZS1DF02V4H32	2.3
11/2"	32	24	0	10	6	10	6	7	4	80	D	57	45	120×86.5×158	ZS1DF02N4J32	2.6
	32	24	0	10	6	10				120	D	57	45	120×86.5×158	ZS1DF02E4J32	2.6
	32	24	0	10	6	10	6	7	4	120	D	57	45	120×86.5×158	ZS1DF02V4J32	2.6
	40	29	0	10	6	10	6	7	4	80	D	57	45	123×94×158	ZS1DF02N4J40	2.9
	40	29	0	10	6	10				120	D	57	45	123×94×158	ZS1DF02E4J40	2.9
	40	29	0	10	6	10	6	7	4	120	D	57	45	123×94×158	ZS1DF02V4J40	2.9
2"	40	29	0	10	6	10	6	7	4	80	D	57	45	130×94×175	ZS1DF02N4K40	3.5
	40	29	0	10	6	10				120	D	57	45	130×94×175	ZS1DF02E4K40	3.5
	40	29	0	10	6	10	6	7	4	120	D	57	45	130×94×175	ZS1DF02V4K40	3.5
	50	48	0	10	6	10	6	7	4	80	D	57	45	165×123×181	ZS1DF02N4K50	4.8
	50	48	0	10	6	10				120	D	57	45	165×123×181	ZS1DF02E4K50	4.8
	50	48	0	10	6	10	6	7	4	120	D	57	45	165×123×181	ZS1DF02V4K50	4.8

ZS 2/2-way large diameter direct acting solenoid valve · normally closed







External Dimensions (Flange Type)

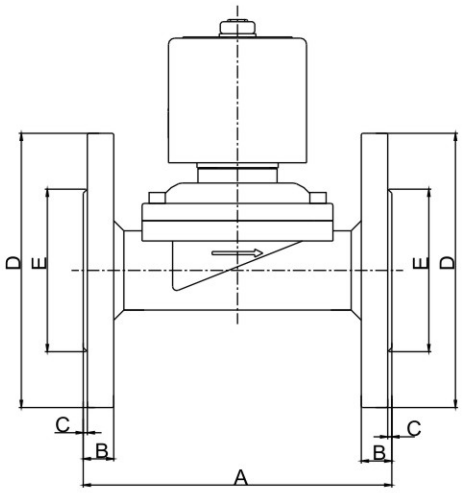

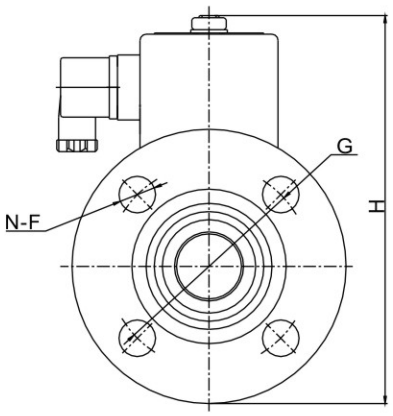

Model	A	B	C	ΦD	ΦE	N-ΦF	ΦG	H
ZS-15BF	106	12	2	95	45	4-14	65	138
ZS-20BF	106	12	2	102	56	4-14	75	142
ZS-25BF	140	14	2	115	62	4-14	85	158
ZS-32BF	152	15	2	135	76	4-18	100	192
ZS-40BF	152	15	2	145	84	4-18	110	202
ZS-50BF	195	16	2	160	98	4-18	125	220
ZS-65BF	250	19	3	185	118	4-18	145	318
ZS-80BF	270	19	3	202	134	4-18	160	330
ZS-100BF	340	20	3	220	162	8-18	180	355

ZS 2/2-way large diameter direct acting solenoid valve · normally closed

Valve Selection List(Flange)

Orifice mm	CV Factor	Operating pressure differential (Kgf/cm²) Min.	Max. Air Gas AC	Max. Air Gas DC	Max. Water Hot water Liquids AC	Max. Water Hot water Liquids DC	Max. Light oil AC	Max. Light oil DC	Max. Fluids Temp.	Coil F Class Type	Power VA AC 220 V	Power W DC 24 V	Model Code 220VAC 50/60HZ	Weight (KG)
15	4.8	0	10	6	10	6	7	4	80	D	20	20	ZS1DF02N4F15	1.8
15	4.8	0	10	6	10	6			120	D	20	20	ZS1DF02E4F15	1.8
15	4.8	0	10	6	10	6	7	4	120	D	20	20	ZS1DF02V4F15	1.8
20	7.6	0	10	6	10	6	7	4	80	D	20	20	ZS1DF02N4F20	2. 0
20	7.6	0	10	6	10	6			120	D	20	20	ZS1DF02E4F20	2. 0
20	7.6	0	10	6	10	6	7	4	120	D	20	20	ZS1DF02V4F20	2. 0
25	12	0	10	6	10	6	7	4	80	D	20	20	ZS1DF02N4F25	2.9
25	12	0	10	6	10	6			120	D	20	20	ZS1DF02E4F25	2.9
25	12	0	10	6	10	6	7	4	120	D	20	20	ZS1DF02V4F25	2.9
32	24	0	10	6	10	6	7	4	80	A	57	45	ZS1AF02N4F32	5.1
32	24	0	10	6	10	6			120	A	57	45	ZS1AF02E4F32	5.1
32	24	0	10	6	10	6	7	4	120	A	57	45	ZS1AF02V4F32	5.1
40	29	0	10	6	10	6	7	4	80	A	57	45	ZS1AF02N4F40	6.1
40	29	0	10	6	10	6			120	A	57	45	ZS1AF02E4F40	6.1
40	29	0	10	6	10	6	7	4	120	A	57	45	ZS1AF02V4F40	6.1
50	48	0	10	6	10	6	7	4	80	A	57	45	ZS1AF02N4F50	8.2
50	48	0	10	6	10	6			120	A	57	45	ZS1AF02E4F50	8.2
50	48	0	10	6	10	6	7	4	120	A	57	45	ZS1AF02V4F50	8.2
65	65	0	6	5	6	5	3	2	80	A	82	96	ZS1AF02N4F65	15.2
65	65	0	6	5	6	5			120	A	82	96	ZS1AF02E4F65	15.2
65	65	0	6	5	6	5	3	2	120	A	82	96	ZS1AF02V4F65	15.2
80	80	0	6	5	6	5	3	2	80	A	82	96	ZS1AF02N4F80	18
80	80	0	6	5	6	5			120	A	82	96	ZS1AF02E4F80	18
80	80	0	6	5	6	5	3	2	120	A	82	96	ZS1AF02V4F80	18
100	115	0	6	5	6	5	3	2	80	A	82	96	ZS1AF02N4F100	23.5
100	115	0	6	5	6	5			120	A	82	96	ZS1AF02E4F100	23.5
100	115	0	6	5	6	5	3	2	120	A	82	96	ZS1AF02V4F100	23.5

ZS 2/2-way large diameter direct acting solenoid valve · normally closed

Components Chart

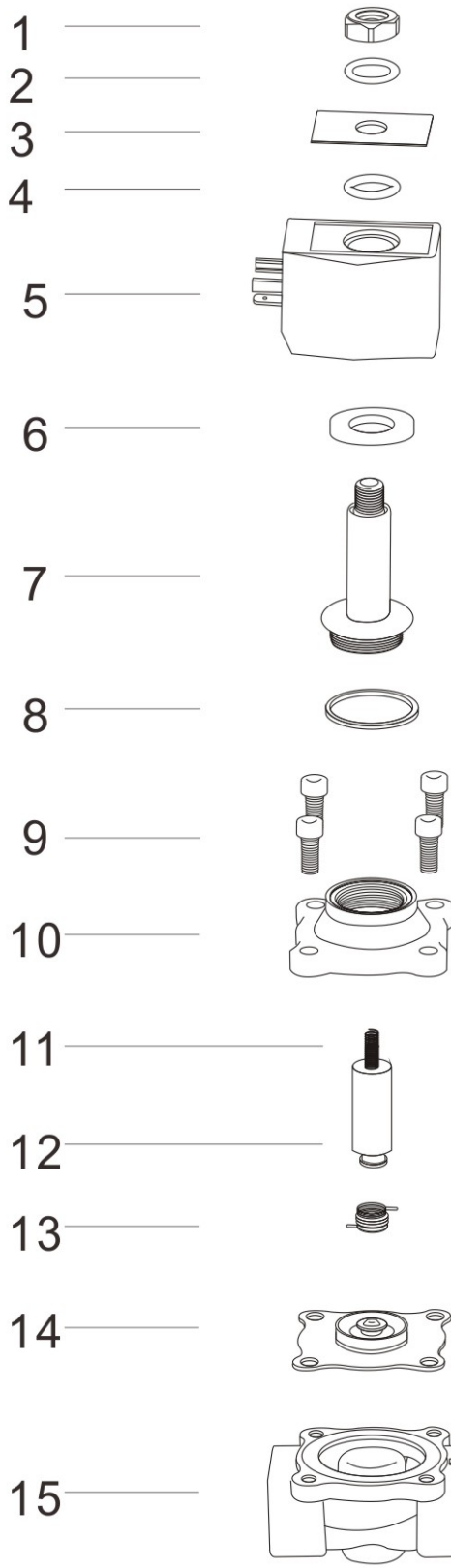

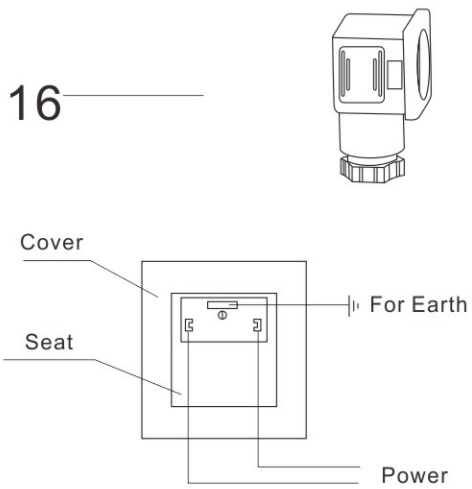

Solenoid Valve Wiring Chart

Code	Components
01	Locknut
02	Gasket
03	Label
04	O Ring
05	Coil
06	Plate
07	Plunger Tube Assembly
08	Plunger Tube Seal Ring
09	Bolts
10	Valve Cover
11	Plunger Spring
12	Plunger Assembly
13	Diaphragm Spring
14	Diaphragm Assembly
15	Valve Body
16	Plug

ZS plastic series 2/2-way zero press differential solenoid valve · normally closed

1: 2- Way normally closed solenoids valve. Closed when de-energized, open when energized

2: Body material: Nylon

3: Max pressure: 10bar Ambient temp 0-65℃

4: Serialized products, small in size, large flow rate

5: Voltage:AC 220V/230V/240V/110V/24V/12V Voltage tolerance:-10% ~ +10%

6: Diaphragm seals: NBR, VITON, EPDM, SILICA GEL

7: Plastic body: Its advantages are low cost, light, good appearance and easy to install. Consult factory for other size.

8: The size below Dn25, coil can fix SM Coil.
AC 220V/AC110V/AC24V/DC24V



Valve Selection List

Pipe Size	Orifice mm	Operating pressure differential (kgf/cm^2)						Max. Fluids Temp. ℃	Coil	Power		External Dimensions Length x Width x Height A×B×H	Model Code 220VAC 50/60HZ	Weight (KG)
		CV Factor	Min.	Max.					F Class	VA	W			
				Air		Water Hot water Liquids			Type	AC 220 V	DC 24 V			
				AC	DC	AC	DC							
1/2"	15	4.8	0	8	6	8	6	80	D	20	20	69×57×106	ZS1DF02N7D15	0.4
	15	4.8	0	8	6	8	6	80	D	20	20	69×57×106	ZS1DF02E7D15	0.4
	15	4.8	0	8	6	8	6	80	D	20	20	69×57×106	ZS1DF02V7D15	0.4
	15	4.8	0			3	3	80	D	20	20	69×57×106	ZS1DF02G7D15	0.4
3/4"	20	7.6	0	8	6	8	6	80	D	20	20	73×57×114	ZS1DF02N7E20	0.45
	20	7.6	0	8	6	8	6	80	D	20	20	73×57×114	ZS1DF02E7E20	0.45
	20	7.6	0	8	6	8	6	80	D	20	20	73×57×114	ZS1DF02V7E20	0.45
	20	7.6	0			3	3	80	D	20	20	73×57×114	ZS1DF02G7E20	0.45
1"	25	12	0	8	6	8	6	80	D	20	20	99×92×117	ZS1DF02N7G25	0.52
	25	12	0	8	6	8	6	80	D	20	20	99×92×117	ZS1DF02E7G25	0.52
	25	12	0	8	6	8	6	80	D	20	20	99×92×117	ZS1DF02V7G25	0.52
	25	12	0			3	3	80	D	20	20	99×92×117	ZS1DF02G7G25	0.52
1 1/2"	40	29	0	6	6	6	6	80	D	57	45	124×115×162	ZS1DF02N7J40	1.9
	40	29	0	6	6	6	6	80	D	57	45	124×115×162	ZS1DF02E7J40	1.9
	40	29	0	6	6	6	6	80	D	57	45	124×115×162	ZS1DF02V7J40	1.9

ZS plastic series 2/2-way zero press differential solenoid valve · normally closed

External Dimensions

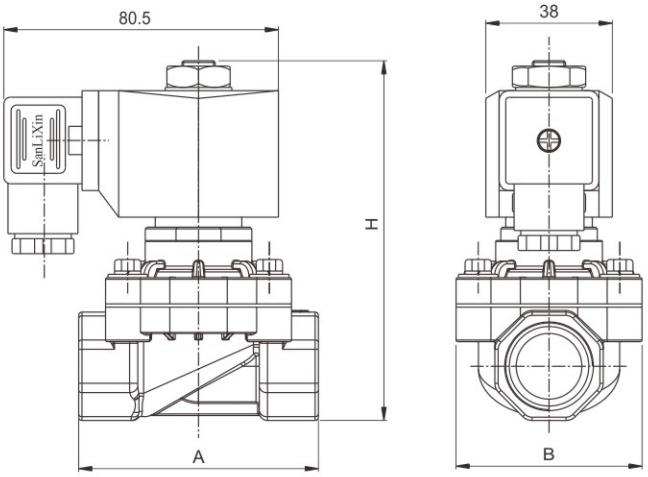

ZS15S-20S

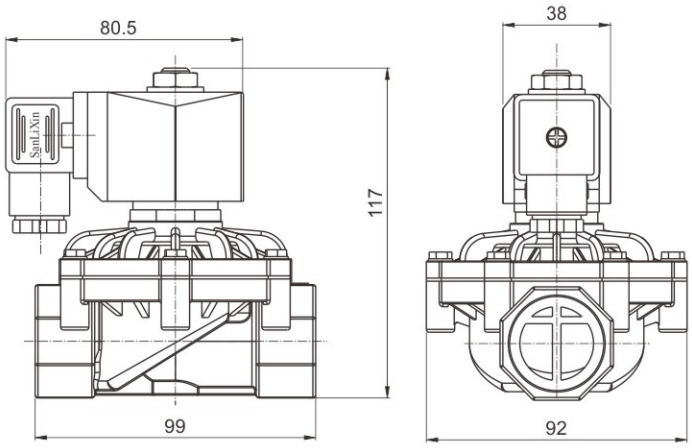

ZS-25S

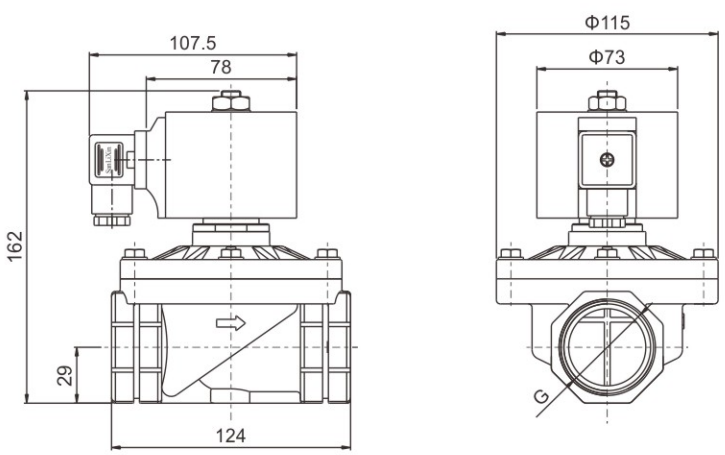

ZS-40S

ZS 2/2-way direct acting solenoid valve · normally open

1: 2-Way normally open solenoid valve, open when de-energized,Closed when energized.

2: Body material: brass

3: Working pressure:0~13kgf/cm^2; Ambient Temp. 0℃~65℃

4: Serialized products, small in size, large flow rate, widely use.

5: Flow as the arrow, mounts in any position;
Best position is Solenoid vertical and upright direction.

6: Voltage: AC110V/220V/230V/240V/ 50/60Hz DC24V/12V
Voltage Tolerance: +10% to -10% applicable voltage

7: This series valves are offered NBR、VITON、EPDM etc for Seals and diaphragm to provide on-off control of various fluids.



External Dimensions

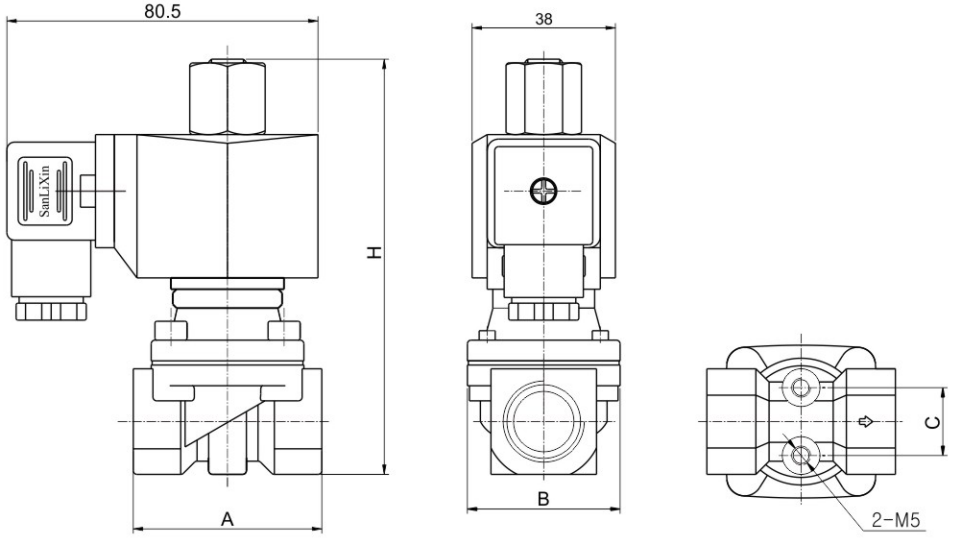

Orifice(mm)	Pipe size G	A	B	C	H
Φ10	1/4"	50	40.5	18	110
	3/8"	50	40.5	18	110
	1/2"	50	40.5	18	110
Φ13	3/8"	55	43	18	110
	1/2"	55	43	18	110
Φ16	1/2"	60	49	25	117
	3/4"	60	49	25	117
Φ20	3/4"	72	60	28	125
	1"	72	60	28	125

ZS 2/2-way direct acting solenoid valve · normally open

Valve Selection List

Pipe Conn -ection	Orifice mm	CV Factor	Operating pressure differential (kgf/cm²)				Max. Fluids Temp.	Coil Type	Power consumption		Coil Class	Model Code Follows Voltage are 220VAC	Weight (kg)
			Min.	Max.					VA	W			
				Air Gas	Water Hot water	Light oil			AC 220V	DC 24V			
1/4"	10	1.9	0	13	13	8	80	D	20	20	F	ZS2DF02N9B10	0.7
	10	1.9	0	13	13		120	D	20	20	F	ZS2DF02E9B10	
	10	1.9	0	13	13	8	120	D	20	20	F	ZS2DF02V9B10	
3/8"	10	2.4	0	13	13	8	80	D	20	20	F	ZS2DF02N9C10	0.68
	10	2.4	0	13	13		120	D	20	20	F	ZS2DF02E9C10	
	10	2.4	0	13	13	8	120	D	20	20	F	ZS2DF02V9C10	
	13	3.1	0	13	13	8	80	D	20	20	F	ZS2DF02N9C13	0.7
	13	3.1	0	13	13		120	D	20	20	F	ZS2DF02E9C13	
	13	3.1	0	13	13	8	120	D	20	20	F	ZS2DF02V9C13	
1/2"	10	2.4	0	13	13	8	80	D	20	20	F	ZS2DF02N9D10	0.67
	10	2.4	0	13	13		120	D	20	20	F	ZS2DF02E9D10	
	10	2.4	0	13	13	8	120	D	20	20	F	ZS2DF02V9D10	
	13	3.1	0	13	13	8	80	D	20	20	F	ZS2DF02N9D13	0.69
	13	3.1	0	13	13		120	D	20	20	F	ZS2DF02E9D13	
	13	3.1	0	13	13	8	120	D	20	20	F	ZS2DF02V9D13	
	16	4.0	0	12	12	8	80	D	20	20	F	ZS2DF02N9D15	0.95
	16	4.0	0	12	12		120	D	20	20	F	ZS2DF02E9D15	
	16	4.0	0	12	12	8	120	D	20	20	F	ZS2DF02V9D15	
3/4"	16	4.0	0	12	12	8	80	D	20	20	F	ZS2DF02N9E15	0.94
	16	4.0	0	12	12		120	D	20	20	F	ZS2DF02E9E15	
	16	4.0	0	12	12	8	120	D	20	20	F	ZS2DF02V9E15	
	20	5.6	0	10	10	8	80	D	20	20	F	ZS2DF02N9E19	1.24
	20	5.6	0	10	10		120	D	20	20	F	ZS2DF02E9E19	
	20	5.6	0	10	10	8	120	D	20	20	F	ZS2DF02V9E19	
1"	20	5.6	0	10	10	8	80	D	20	20	F	ZS2DF02N9G19	1.14
	20	5.6	0	10	10		120	D	20	20	F	ZS2DF02E9G19	
	20	5.6	0	10	10	8	120	D	20	20	F	ZS2DF02V9G19	

ZS 2/2-way direct acting solenoid valve · normally open

1: 2-Way normally open solenoid valve, open when de-energized,Closed when energized.

2: Body material: Stainless steel (SS304)

3: Working pressure:0~13kgf/cm^2; Ambient Temp. 0℃~65℃

4: Serialized products, small in size, large flow rate, widely use.

5: Flow as the arrow, mounts in any position;
Best position is Solenoid vertical and upright direction.

6: Voltage: AC110V/220V/230V/240V/ 50/60Hz DC24V/12V
Voltage Tolerance: +10% to -10% applicable voltage

7: This series valves are offered NBR、VITON、EPDM etc for Seals and diaphragm to provide on-off control of various fluids.



External Dimensions

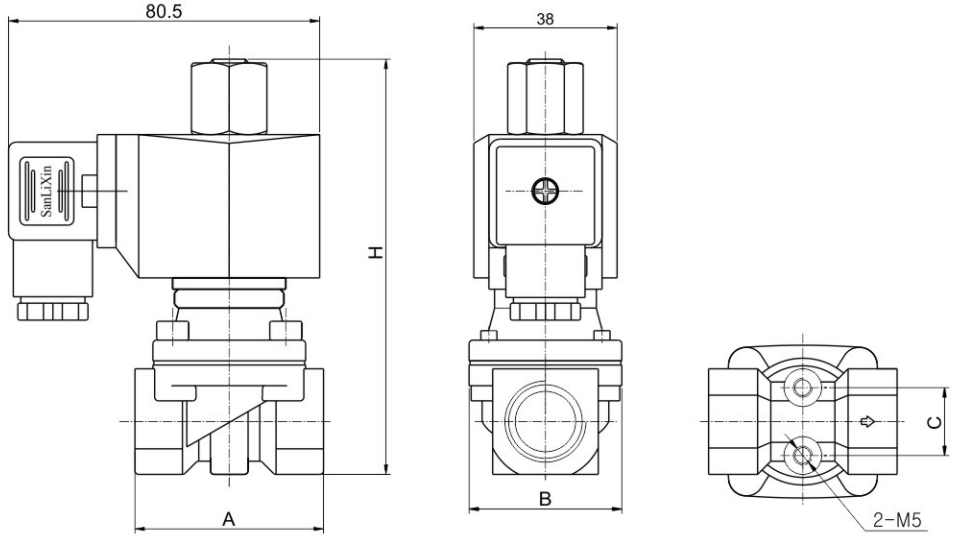

Orifice(mm)	Pipe size G	A	B	C	H
Φ10	1/4"	50	40.5	18	110
	3/8"	50	40.5	18	110
	1/2"	50	40.5	18	110
Φ13	3/8"	55	43	18	110
	1/2"	55	43	18	110
Φ16	1/2"	60	49	25	117
	3/4"	60	49	25	117
Φ20	3/4"	72	60	28	125
	1"	72	60	28	125

ZS 2/2-way direct acting solenoid valve · normally open

Valve Selection List

Pipe Conn -ection	Orifice mm	CV Factor	Operating pressure differential (kgf/cm²)				Max. Fluids Temp.	Coil Type	Power consumption		Coil Class	Model Code Follows Voltage are 220VAC	Weight (kg)
			Min.	Max.					VA	W			
				Air Gas	Water Hot water	Light oil			AC 220V	DC 24V			
1/4"	10	1.9	0	13	13	8	80	D	20	20	F	ZS2DF02N4B10	0.7
	10	1.9	0	13	13		120	D	20	20	F	ZS2DF02E4B10	
	10	1.9	0	13	13	8	120	D	20	20	F	ZS2DF02V4B10	
3/8"	10	2.4	0	13	13	8	80	D	20	20	F	ZS2DF02N4C10	0.68
	10	2.4	0	13	13		120	D	20	20	F	ZS2DF02E4C10	
	10	2.4	0	13	13	8	120	D	20	20	F	ZS2DF02V4C10	
	13	3.1	0	13	13	8	80	D	20	20	F	ZS2DF02N4C13	0.7
	13	3.1	0	13	13		120	D	20	20	F	ZS2DF02E4C13	
	13	3.1	0	13	13	8	120	D	20	20	F	ZS2DF02V4C13	
1/2"	10	2.4	0	13	13	8	80	D	20	20	F	ZS2DF02N4D10	0.67
	10	2.4	0	13	13		120	D	20	20	F	ZS2DF02E4D10	
	10	2.4	0	13	13	8	120	D	20	20	F	ZS2DF02V4D10	
	13	3.1	0	13	13	8	80	D	20	20	F	ZS2DF02N4D13	0.69
	13	3.1	0	13	13		120	D	20	20	F	ZS2DF02E4D13	
	13	3.1	0	13	13	8	120	D	20	20	F	ZS2DF02V4D13	
	16	4.0	0	12	12	8	80	D	20	20	F	ZS2DF02N4D15	0.9
	16	4.0	0	12	12		120	D	20	20	F	ZS2DF02E4D15	
	16	4.0	0	12	12	8	120	D	20	20	F	ZS2DF02V4D15	
3/4"	16	4.0	0	12	12	8	80	D	20	20	F	ZS2DF02N4E15	0.88
	16	4.0	0	12	12		120	D	20	20	F	ZS2DF02E4E15	
	16	4.0	0	12	12	8	120	D	20	20	F	ZS2DF02V4E15	
	20	5.6	0	10	10	8	80	D	20	20	F	ZS2DF02N4E19	1.15
	20	5.6	0	10	10		120	D	20	20	F	ZS2DF02E4E19	
	20	5.6	0	10	10	8	120	D	20	20	F	ZS2DF02V4E19	
1"	20	5.6	0	10	10	8	80	D	20	20	F	ZS2DF02N4G19	1.05
	20	5.6	0	10	10		120	D	20	20	F	ZS2DF02E4G19	
	20	5.6	0	10	10	8	120	D	20	20	F	ZS2DF02V4G19	

ZS 2/2-way direct acting solenoid valve · normally open

1: 2-Way normally open solenoid valve, open when de-energized,Closed when energized.

2: Body material: brass

3: Max.Allowable pressure 10kgf/cm^2; Ambient Temp. 0℃~65℃

4: Serialized products, small in size, large flow rate, widely use.

5: Flow as the arrow, mounts in any position; Best position is Solenoid vertical and upright direction.

6: Voltage: 220VAC/230VAC/240VAC/110VAC/24VAC 50/60Hz 24VDC/12VDC;
Voltage Tolerance: +10% to -10% applicable voltage

7: This series valves are offered NBR、VITON、EPDM etc for Seals and diaphragm to provide on-off control of various fluids.



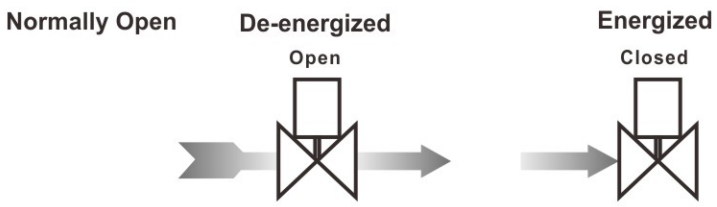

Construction, External Dimensions Chart

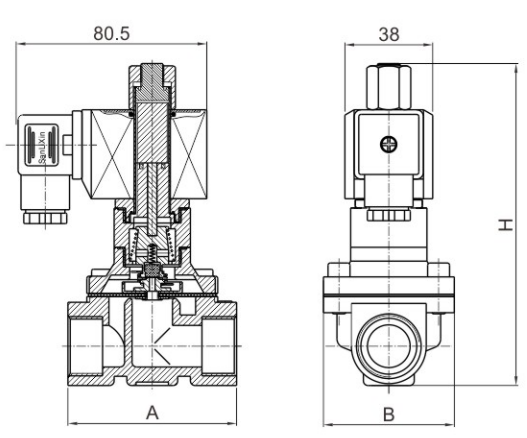

DN15-25mm

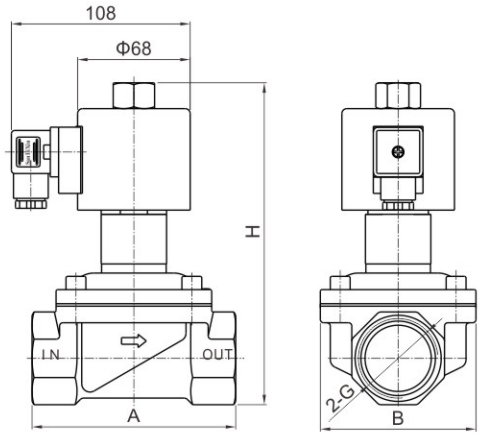

DN32-50mm

ZS 2/2-way direct acting solenoid valve · normally open

Valve Selection List

Pipe Conn -ection	Orifice mm	CV Factor	Operating pressure differential (kgf/cm²) Min.	Max. Air Gas AC	Max. Air Gas DC	Max. Water Hot water Liquids AC	Max. Water Hot water Liquids DC	Max. Light oil ≤20CST AC	Max. Light oil ≤20CST DC	Max. Fluids Temp.	Coil Type F Class	Power consumption VA AC 220V	Power consumption W DC 24V	External Dimensions Length x Width x Height A x B x H	Model Code Follows Voltage are 220VAC 50/60HZ	Weight (KG)
3/8"	4.0	0.6	0	4	4	4	4	3	3	80	D	33	20	52.5×32.5×115	ZS2DF02N1C04	0.7
	4.0	0.6	0	4	4	4	4			120	D	33	20	52.5×32.5×115	ZS2DF02E1C04	0.7
	4.0	0.6	0	4	4	4	4	3	3	120	D	33	20	52.5×32.5×115	ZS2DF02V1C04	0.7
	16	4.8	0	5	5	5	5	3	3	80	D	33	20	69×57×130	ZS2DF02N1C16	1.2
	16	4.8	0	5	5	5	5			120	D	33	20	69×57×130	ZS2DF02E1C16	1.2
	16	4.8	0	5	5	5	5	3	3	120	D	33	20	69×57×130	ZS2DF02V1C16	1.2
1/2"	16	4.8	0	5	5	5	5	3	3	80	D	33	20	69×57×130	ZS2DF02N1D16	1.15
	16	4.8	0	5	5	5	5			120	D	33	20	69×57×130	ZS2DF02E1D16	1.15
	16	4.8	0	5	5	5	5	3	3	120	D	33	20	69×57×130	ZS2DF02V1D16	1.15
3/4"	20	7.6	0	5	5	5	5	3	3	80	D	33	20	73×57×138	ZS2DF02N1E20	1.25
	20	7.6	0	5	5	5	5			120	D	33	20	73×57×138	ZS2DF02E1E20	1.25
	20	7.6	0	5	5	5	5	3	3	120	D	33	20	73×57×138	ZS2DF02V1E20	1.25
1"	20	7.6	0	5	5	5	5	3	3	80	D	33	20	80×62×142	ZS2DF02N1G20	1.35
	20	7.6	0	5	5	5	5			120	D	33	20	80×62×142	ZS2DF02E1G20	1.35
	20	7.6	0	5	5	5	5	3	3	120	D	33	20	80×62×142	ZS2DF02V1G20	1.35
	25	12	0	5	5	5	5	3	3	80	D	33	20	99×77.5×146	ZS2DF02N1G25	1.7
	25	12	0	5	5	5	5			120	D	33	20	99×77.5×146	ZS2DF02E1G25	1.7
	25	12	0	5	5	5	5	3	3	120	D	33	20	99×77.5×146	ZS2DF02V1G25	1.7
1 1/4"	32	24	0	5	5	5	5	3	3	80	D	70	55	112×86.5×192	ZS2AF02N2H32	2.75
	32	24	0	5	5	5	5			120	D	70	55	112×86.5×192	ZS2AF02E2H32	2.75
	32	24	0	5	5	5	5	3	3	120	D	70	55	112×86.5×192	ZS2AF02V2H32	2.75
	32	24	0	5	5	5	5	3	3	80	D	70	55	112×86.5×192	ZS2AF02N1H32	2.9
	32	24	0	5	5	5	5			120	D	70	55	112×86.5×192	ZS2AF02E1H32	2.9
	32	24	0	5	5	5	5	3	3	120	D	70	55	112×86.5×192	ZS2AF02V1H32	2.9
1 1/2"	32	24	0	5	5	5	5	3	3	80	D	70	55	120×86.5×203	ZS2AF02N1J32	3.0
	32	24	0	5	5	5	5			120	D	70	55	120×86.5×203	ZS2AF02E1J32	3.0
	32	24	0	5	5	5	5	3	3	120	D	70	55	120×86.5×203	ZS2AF02V1J32	3.0
	40	29	0	5	5	5	5	3	3	80	D	70	55	123×94×203	ZS2AF02N2J40	3.15
	40	29	0	5	5	5	5			120	D	70	55	123×94×203	ZS2AF02E2J40	3.15
	40	29	0	5	5	5	5	3	3	120	D	70	55	123×94×203	ZS2AF02V2J40	3.15
	40	29	0	5	5	5	5	3	3	80	D	70	55	123×94×203	ZS2AF02N1J40	3.2
	40	29	0	5	5	5	5			120	D	70	55	123×94×203	ZS2AF02E1J40	3.2
	40	29	0	5	5	5	5	3	3	120	D	70	55	123×94×203	ZS2AF02V1J40	3.2
2"	40	29	0	5	5	5	5	3	3	80	D	70	55	130×94×220	ZS2AF02N1K40	3.8
	40	29	0	5	5	5	5			120	D	70	55	130×94×220	ZS2AF02E1K40	3.8
	40	29	0	5	5	5	5	3	3	120	D	70	55	130×94×220	ZS2AF02V1K40	3.8
	50	48	0	5	5	5	5	3	3	80	D	70	55	168×120×226	ZS2AF02N2K50	5.4
	50	48	0	5	5	5	5			120	D	70	55	168×120×226	ZS2AF02E2K50	5.4
	50	48	0	5	5	5	5	3	3	120	D	70	55	168×120×226	ZS2AF02V2K50	5.4
	50	48	0	5	5	5	5	3	3	80	D	70	55	168×120×226	ZS2AF02N1K50	5.6
	50	48	0	5	5	5	5			120	D	70	55	168×120×226	ZS2AF02E1K50	5.6
	50	48	0	5	5	5	5	3	3	120	D	70	55	168×120×226	ZS2AF02V1K50	5.6

ZS 2/2-way direct acting solenoid valve · normally open

1: 2-Way normally open solenoid valve, open when de-energized,Closed when energized.

2: Body material:SS304 (standard). SS316 (special made)

3: Max. Allowable pressure 10kgf/cm^2; Ambient Temp. 0℃~65℃

4: Serialized products, small in size, large flow rate, widely use.

5: Flow as the arrow, mounts in any position; Best position is Solenoid vertical and upright direction.

6: Voltage: 220VAC/230VAC/240VAC/110VAC/24VAC 50/60Hz 24VDC/12VDC;
Voltage Tolerance: +10% to -10% applicable voltage

7: This series valves are offered NBR、VITON、EPDM etc for Seals and diaphragm to provide on-off control of various fluids.



Normally Open

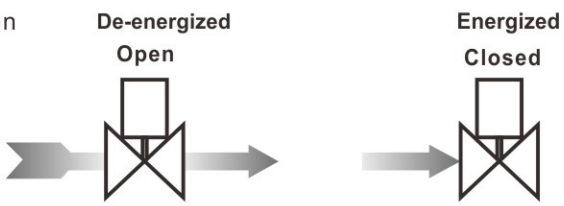

Construction, External Dimensions Chart

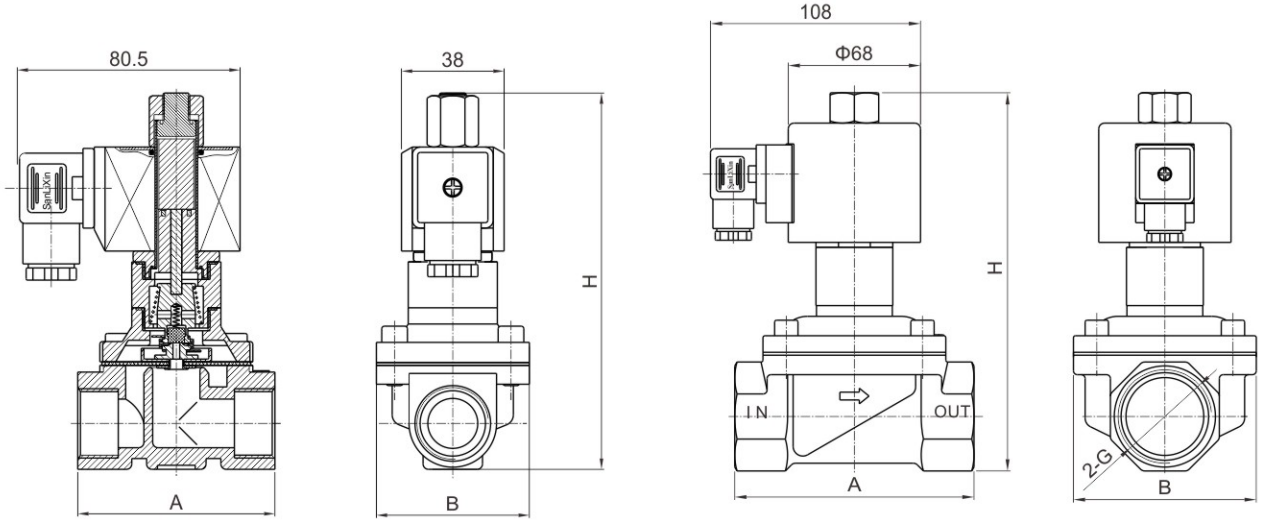

DN15~25mm

DN32~50mm

ZS 2/2-way direct acting solenoid valve · normally open

Valve Selection List

Pipe Conn -ection	Orifice mm	CV Factor	Operating pressure differential (kgf/cm²) Min.	Max. Air Gas AC	Max. Air Gas DC	Max. Water Hot water Liquids AC	Max. Water Hot water Liquids DC	Max. Light oil ≤20CST AC	Max. Light oil ≤20CST DC	Max. Fluids Temp.	Coil Type F Class	Power consumption VA AC 220V	Power consumption W DC 24V	External Dimensions Length x Width x Height A x B x H	Model Code Follows Voltage are 220VAC 50/60HZ	Weight (KG)
3/8"	4.0	0.6	0	4	4	4	4	3	3	80	D	33	20	53.5×32.5×115	ZS2DF02N4C04	0.7
	4.0	0.6	0	4	4	4	4			120	D	33	20	53.5×32.5×115	ZS2DF02E4C04	0.7
	4.0	0.6	0	4	4	4	4	3	3	120	D	33	20	53.5×32.5×115	ZS2DF02V4C04	0.7
	16	4.8	0	5	5	5	5	3	3	80	D	33	20	69×57×130	ZS2DF02N4C16	1.1
	16	4.8	0	5	5	5	5			120	D	33	20	69×57×130	ZS2DF02E4C16	1.1
	16	4.8	0	5	5	5	5	3	3	120	D	33	20	69×57×130	ZS2DF02V4C16	1.1
1/2"	16	4.8	0	5	5	5	5	3	3	80	D	33	20	69×57×130	ZS2DF02N4D16	1.05
	16	4.8	0	5	5	5	5			120	D	33	20	69×57×130	ZS2DF02E4D16	1.05
	16	4.8	0	5	5	5	5	3	3	120	D	33	20	69×57×130	ZS2DF02V4D16	1.05
3/4"	20	7.6	0	5	5	5	5	3	3	80	D	33	20	73×57×138	ZS2DF02N4E20	1.2
	20	7.6	0	5	5	5	5			120	D	33	20	73×57×138	ZS2DF02E4E20	1.2
	20	7.6	0	5	5	5	5	3	3	120	D	33	20	73×57×138	ZS2DF02V4E20	1.2
1"	20	7.6	0	5	5	5	5	3	3	80	D	33	20	80×62×142	ZS2DF02N4G20	1.3
	20	7.6	0	5	5	5	5			120	D	33	20	80×62×142	ZS2DF02E4G20	1.3
	20	7.6	0	5	5	5	5	3	3	120	D	33	20	80×62×142	ZS2DF02V4G20	1.3
	25	12	0	5	5	5	5	3	3	80	D	33	20	99×77.5×146	ZS2DF02N4G25	1.6
	25	12	0	5	5	5	5			120	D	33	20	99×77.5×146	ZS2DF02E4G25	1.6
	25	12	0	5	5	5	5	3	3	120	D	33	20	99×77.5×146	ZS2DF02V4G25	1.6
1-1/4"	32	24	0	5	5	5	5	3	3	80	D	70	55	112×86.5×192	ZS2AF02N4H32	2.9
	32	24	0	5	5	5	5			120	D	70	55	112×86.5×192	ZS2AF02E4H32	2.9
	32	24	0	5	5	5	5	3	3	120	D	70	55	112×86.5×192	ZS2AF02V4H32	2.9
1-1/2"	32	24	0	5	5	5	5	3	3	80	D	70	55	120×86.5×203	ZS2AF02N4J32	3.2
	32	24	0	5	5	5	5			120	D	70	55	120×86.5×203	ZS2AF02E4J32	3.2
	32	24	0	5	5	5	5	3	3	120	D	70	55	120×86.5×203	ZS2AF02V4J32	3.2
	40	29	0	5	5	5	5	3	3	80	D	70	55	123×94×203	ZS2AF02N4J40	3.2
	40	29	0	5	5	5	5			120	D	70	55	123×94×203	ZS2AF02E4J40	3.2
	40	29	0	5	5	5	5	3	3	120	D	70	55	123×94×203	ZS2AF02V4J40	3.2
2"	40	29	0	5	5	5	5	3	3	80	D	70	55	130×94×220	ZS2AF02N4K40	3.8
	40	29	0	5	5	5	5			120	D	70	55	130×94×220	ZS2AF02E4K40	3.8
	40	29	0	5	5	5	5	3	3	120	D	70	55	130×94×220	ZS2AF02V4K40	3.8
	50	48	0	5	5	5	5	3	3	80	D	70	55	168×123×226	ZS2AF02N4K50	5.2
	50	48	0	5	5	5	5			120	D	70	55	168×123×226	ZS2AF02E4K50	5.2
	50	48	0	5	5	5	5	3	3	120	D	70	55	168×123×226	ZS2AF02V4K50	5.2

ZS 2/2-way direct acting solenoid valve · normally open



Valve Selection List (Flange)

Orifice mm	CV Factor	Operating pressure differential (kgf/cm^2)							Max. Fluids Temp.	Coil	Power consumption		Model Code 220VAC 50/60HZ	Weight (KG)
		Min.	Max.											
			Air Gas		Water Hot water Liquids		Light oil			F Class Type	VA AC 220 V	W DC 24 V		
			AC	DC	AC	DC	AC	DC						
15	4.8	0	5	5	5	5	3	3	80	D	33	20	ZS2DF02N4F15	1.95
15	4.8	0	5	5	5	5			120	D	33	20	ZS2DF02E4F15	1.95
15	4.8	0	5	5	5	5	3	3	120	D	33	20	ZS2DF02V4F15	1.95
20	7.6	0	5	5	5	5	3	3	80	D	33	20	ZS2DF02N4F20	2.15
20	7.6	0	5	5	5	5			120	D	33	20	ZS2DF02E4F20	2.15
20	7.6	0	5	5	5	5	3	3	120	D	33	20	ZS2DF02V4F20	2.15
25	12	0	5	5	5	5	3	3	80	D	33	20	ZS2DF02N4F25	3.05
25	12	0	5	5	5	5			120	D	33	20	ZS2DF02E4F25	3.05
25	12	0	5	5	5	5	3	3	120	D	33	20	ZS2DF02V4F25	3.05
32	24	0	5	5	5	5	3	3	80	D	70	55	ZS2AF02N4F32	5.4
32	24	0	5	5	5	5			120	D	70	55	ZS2AF02E4F32	5.4
32	24	0	5	5	5	5	3	3	120	D	70	55	ZS2AF02V4F32	5.4
40	29	0	5	5	5	5	3	3	80	D	70	55	ZS2AF02N4F40	6.4
40	29	0	5	5	5	5			120	D	70	55	ZS2AF02E4F40	6.4
40	29	0	5	5	5	5	3	3	120	D	70	55	ZS2AF02V4F40	6.4
50	48	0	5	5	5	5	3	3	80	D	70	55	ZS2AF02N4F50	8.6
50	48	0	5	5	5	5			120	D	70	55	ZS2AF02E4F50	8.6
50	48	0	5	5	5	5	3	3	120	D	70	55	ZS2AF02V4F50	8.6

ZS 2/2-way direct acting solenoid valve · normally open

External Dimensions (Flange Series)

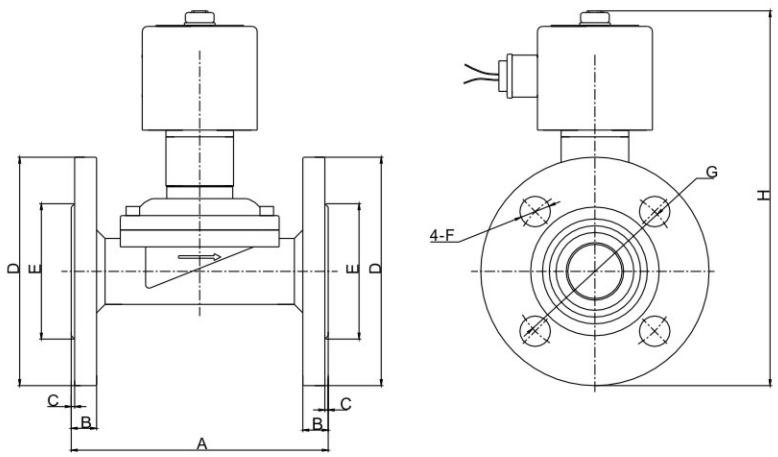

Model	A	B	C	ϕD	ϕE	ϕF	ϕG	H
ZS–15BHF	106	12	2	95	45	4-14	65	162
ZS–20BHF	106	12	2	102	56	4-14	75	165
ZS–25BHF	140	14	2	115	62	4-14	85	180
ZS–32BHF	152	15	2	135	76	4-18	100	235
ZS–40BHF	152	15	2	145	84	4-18	110	240
ZS–50BHF	195	16	2	160	98	4-18	125	255

ZS plastic series 2/2-way zero press differential solenoid valve · normally open

1: 2/2 -Way normally open solenoids valve.
2: Open when de-energized,closed when energized
3: Body material: Nylon
4: Max pressure: 10bar Ambient temp 0-65℃
5: Serialized products, small in size, large flow rate
6: Voltage:AC 220V/230V/240V/110V/24V/12V
7: Voltage tolerance:-10% ~ +10%
8: Diaphragm seals: NBR, VITON, EPDM, SILICA GEL
9: Plastic body: Its advantages are low cost, light, good appearance and easy to install. Consult factory for other size.



Valve Selection List

Pipe Size	Orifice mm	Operating pressure differential (kgf/cm²) CV Factor	Min.	Max. Air AC	Max. Air DC	Max. Water Hot water Liquids AC	Max. Water Hot water Liquids DC	Max. Fluids Temp. ℃	Coil F Class Type	Power VA AC 220 V	Power W DC 24 V	External Dimensions Length x Width x Height A×B×H	Model Code 220VAC 50/60HZ	Weight (KG)
1/2"	15	4.8	0	5	5	5	5	80	D	33	20	69×57×133	ZS2DF02N7D15	0.6
	15	4.8	0	5	5	5	5	80	D	33	20	69×57×133	ZS2DF02E7D15	0.6
	15	4.8	0	5	5	5	5	80	D	33	20	69×57×133	ZS2DF02V7D15	0.6
	15	4.8	0			3	3	80	D	33	20	69×57×133	ZS2DF02G7D15	0.6
3/4"	20	7.6	0	5	5	5	5	80	D	33	20	73×57×140	ZS2DF02N7E20	0.6
	20	7.6	0	5	5	5	5	80	D	33	20	73×57×140	ZS2DF02E7E20	0.6
	20	7.6	0	5	5	5	5	80	D	33	20	73×57×140	ZS2DF02V7E20	0.6
	20	7.6	0			3	3	80	D	33	20	73×57×140	ZS2DF02G7E20	0.6
1"	25	12	0	5	5	5	5	80	D	33	20	99×77×146	ZS2DF02N7G25	0.7
	25	12	0	5	5	5	5	80	D	33	20	99×77×146	ZS2DF02E7G25	0.7
	25	12	0	5	5	5	5	80	D	33	20	99×77×146	ZS2DF02V7G25	0.7
	25	12	0			3	3	80	D	33	20	99×77×146	ZS2DF02G7G25	0.7

External Dimensions Chart

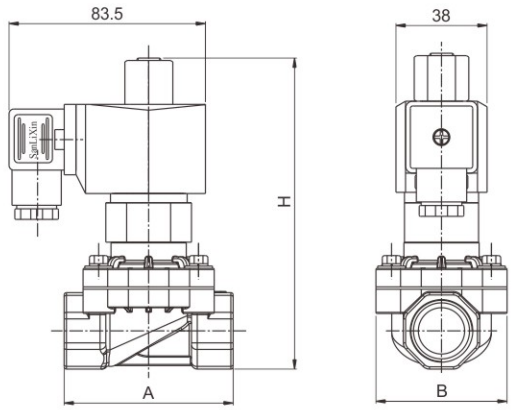

ZS2-15S~20S

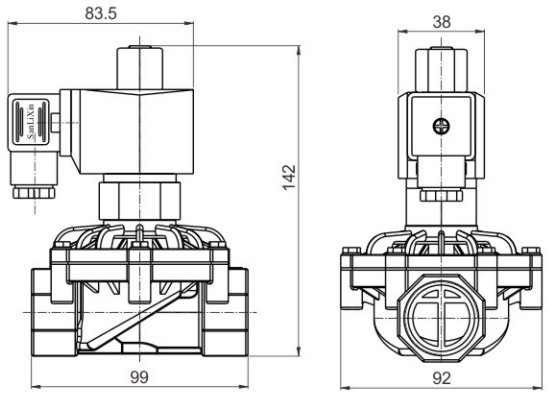

ZS2-25S

ZS series coil parameters tables

ZS Series Coils Characteristics List

Coils Model Code	Voltage	Power consumption					The orifice for suitable Valve Model. (mm)	
		50HZ VA		60HZ VA		DC		
		Inrush	Holding	Inrush	Holding	W	Normally closed	Normally open
N05-2101	AC220V	32	13	32	12	———	ϕ2.5	———
N05-2102	AC110V	32	13	32	12	———	ϕ3.0	
N05-2106	DC24V	———				8.5		
N05-2107	DC12V					8.5		
D01-4101A N01-4101	AC220V	60	20	60	20	———	ϕ4~ ϕ25	———
D01-4101B N01-4101	AC220V	82	33	82	33	———	———	ϕ2.5~ϕ3.0 ϕ4~ ϕ25
A01-4101	AC220V	70	28	70	23	———	ϕ4~ ϕ25	ϕ4~ ϕ25
D01-4102	AC110V	82	28	82	28			
N01-4102	AC110V	82	28	82	28			
A01-4102	AC110V	70	28	70	23			
D01-4106	DC24V	———				20	ϕ4~ ϕ25	
D01-4107	DC12V							
D08-6101 N08-6101	AC220V	175	57	175	56	———	ϕ32~ ϕ50	
A08-6101	AC220V	110	44	110	36			
D08-6102 N08-6102	AC110V	110	45	110	36			
A08-6102	AC110V	110	44	110	36			
D08-6106 N08-6106	DC24V	———				45		
A08-6106	DC24V					49		
A10-92101	AC220V	159	55	150	50	———	Φ65~Φ100	
A10-92106	DC24V	———				96		

SM Coil parameters tables

Coils Model Code	Voltage	Power consumption		Electricity		The orifice for suitable Valve Model. (mm)	
		Inrush	holding	Inrush	holding	Normally closed	Normally open
SM–3101	AC220V	78VA	4.5VA	350mA	20mA	ϕ10	———
SM–3102	AC110V	72VA	5.0VA	660mA	45mA		
SM–3106	DC24V	80W	7.2W	3300mA	310mA		
SM–3104	AC24V	52VA	6.3VA	2600mA	320mA		
SM–3107	DC12V	35W	8.5W	2900mA	700mA		
SM-4101	AC220V	130VA	6VA	590mA	28mA	Compact Direct Acting ϕ4– ϕ10 Diaphragm Type ϕ16– ϕ25	
SM-4102	AC110V	95VA	8.0VA	900mA	75mA		
SM-4106	DC24V	98W	8. 8W	4050mA	365mA		
SM-4104	AC24V	66VA	6. 8VA	3400mA	360mA		
SM-4107	DC12V	45W	4.5W	3750mA	380mA		

SLP compact series 2/2-way solenoid valve

Solenoid Valves Numbering System for Order

Position description	1	2	3	4	5	6	7	8	9	10
	Valve Series	Mode of Operation	Coil Type	Coil Class	Voltage	Seal Material	Body Material	Pipe Size	Orifice (mm)	Options
E.G.	SLP	1	D	F	02	N	1	E	20	□
	SLP Series	1: Normally Closed 2: Normally Open	D: DIN Standard Connections, Fully Encapsulated N: Lead Wires, Water-tight, Fully Encapsulat U= Under water X: Explosion-proof S: NASS Coil M: SM Coil	F:F Class H:H Class	02= AC220V AC230V 01= AC110V AC120V 05= AC24V 12= DC12V 13= DC24V Contact the Factory for Others	N: NBR V: VITON E: EPDM	1=Forged Brass 4= SS304 3= Ss316 7= Plastic	A=1/8" B=1/4" B=1/4" C=3/8" C=3/8" D=1/2" E=3/4" G=1" H=1 1/4" J=1 1/2" K=2" F= 法兰 连接	03=3.0 05=5.0 06=6.0 10=10.0 C9=10.5 03=3.0 04=4.0 05=5.0 06=6.0 10=10.0 C9=10.5 13=13.0 20=20.0 20=20.0 25=25.0 32=32.0 40=40.0 40=40.0 50=50.0 25=25.0 32=32.0 40=40.0 50=50.0 65=65.0 80=80.0 100=100.0	M= Manual Override L= Neon lamp K= Mounting Bracket N= NPT thread Y=Sensor
							9=Forged Brass 4=SS304 5=Stainless steel	A=1/8" B=1/4"	01=1.0 C2=1.5 C3=2.5 03=3.0 04=4.0	

SLP compact series 2/2-way direct acting solenoid valve · normally closed

1: 2-Way normally closed solenoid valve, Closed when de-energized, open when energized.
2: Serialized products, small in size, large flow rate, widely use
3: Body material: forged brass.316 stainless steel.
4: Ambient Temp. 0℃~65℃, Fluids Temp 0℃~130℃
5: Flow as the arrow, mounts in any position; Best position is solenoid vertical and upright direction.
6: Voltage: 220VAC/230VAC/240VAC/110VAC/24VAC 50/60HZ 24VDC/12VDC; Voltage Tolerance: +10% to -10% applicable voltage
7: This series valves are offered NBR、VITON、EPDM etc for Seals and diaphragm to provide on-off control of various fluids.
8: Coil can fix SM Coil. AC 220V/AC110V/AC24V/DC24V
Ex-proof 3C certificate number: 2020312307000034

Normally closed



Construction, External Dimensions Chart

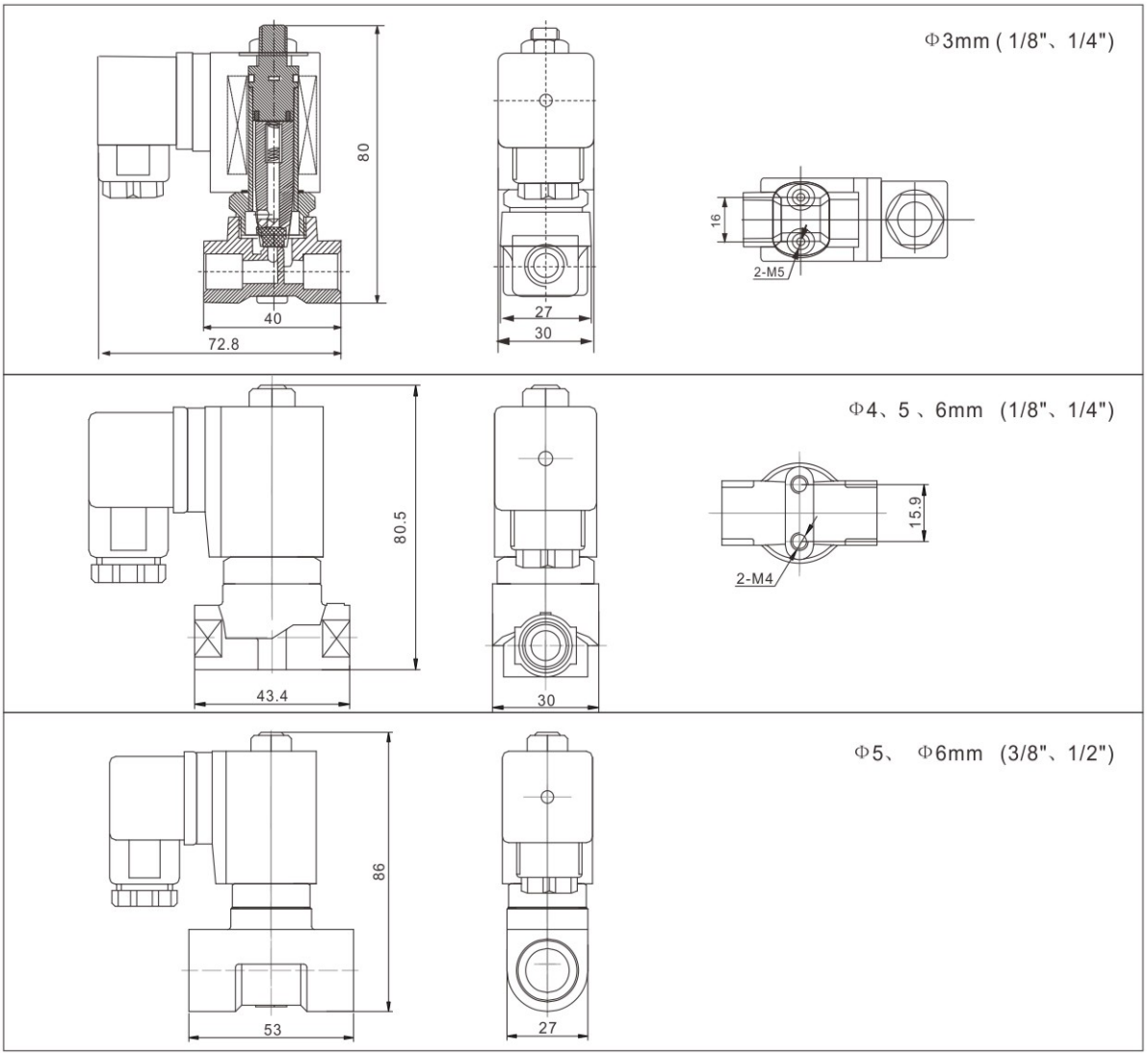

SLP compact series 2/2-way direct acting solenoid valve · normally closed



Valve Selection List

Pipe Conn -ection	Orifice mm	CV Factor	Operating pressure differential (kgf/cm²) Min.	Max. Air Gas AC	Max. Air Gas DC	Max. Water Hot water Liquids AC	Max. Water Hot water Liquids DC	Max. Light oil ≤ 20CST AC	Max. Light oil ≤ 20CST DC	Max. fluids Temp. ℃	Coil Type	Power consumption VA AC 220V	Power consumption W DC 24V	Coil Class	Model Code Follows Voltage are 220VAC Body material Forgeda brass	Model Code Follows Voltage are 220VAC Body material SS316	Weight KG
1/8″	3	0.23	0	13	13	13	13	10	10	80	D	22	13	F	SLP1DF02N1A03	SLP1DF02N3A03	0.37
	3	0.23	0	13	13	13	13			130	D	22	13	F	SLP1DF02E1A03	SLP1DF02E3A03	0.37
	3	0.23	0	13	13	13	13	10	10	120	D	22	13	F	SLP1DF02V1A03	SLP1DF02V3A03	0.37
	4	0.6	0	8	8	8	8	6	6	80	D	22	13	F	SLP1DF02N1A04	SLP1DF02N3A04	0.36
	4	0.6	0	8	8	8	8			130	D	22	13	F	SLP1DF02E1A04	SLP1DF02E3A04	0.36
	4	0.6	0	8	8	8	8	6	6	120	D	22	13	F	SLP1DF02V1A04	SLP1DF02V3A04	0.36
	5	0.65	0	4	2.5	4	2.5	2.5	2	80	D	22	13	F	SLP1DF02N1A05	SLP1DF02N3A05	0.36
	5	0.65	0	4	2.5	4	2.5			130	D	22	13	F	SLP1DF02E1A05	SLP1DF02E3A05	0.36
	5	0.65	0	4	2.5	4	2.5	2.5	2	120	D	22	13	F	SLP1DF02V1A05	SLP1DF02V3A05	0.36
	6	0.8	0	3	2	3	2	2.5	2	80	D	22	13	F	SLP1DF02N1A06	SLP1DF02N3A06	0.36
	6	0.8	0	3	2	3	2			130	D	22	13	F	SLP1DF02E1A06	SLP1DF02E3A06	0.36
	6	0.8	0	3	2	3	2	2.5	2	120	D	22	13	F	SLP1DF02V1A06	SLP1DF02V3A06	0.36

SLP compact series 2/2-way direct acting solenoid valve · normally closed

Valve Selection List

Pipe Conn -ection	Orifice mm	CV Factor	Operating pressure differential (kgf/cm²) Min.	Max. Air Gas AC	Max. Air Gas DC	Max. Water Hot water Liquids AC	Max. Water Hot water Liquids DC	Max. Light oil ≤ 20CST AC	Max. Light oil ≤ 20CST DC	Max. fluids Temp. ℃	Coil Type	Power consumption VA AC 220V	Power consumption W DC 24V	Coil Class	Model Code Follows Voltage are 220VAC Body material Forgeda brass	Model Code Follows Voltage are 220VAC Body material SS316	Weight KG
1/4″	3	0.23	0	13	13	13	13	10	10	80	D	22	13	F	SLP1DF02N1B03	SLP1DF02N3B03	0.36
	3	0.23	0	13	13	13	13			130	D	22	13	F	SLP1DF02E1B03	SLP1DF02E3B03	0.36
	3	0.23	0	13	13	13	13	10	10	120	D	22	13	F	SLP1DF02V1B03	SLP1DF02V3B03	0.36
	4	0.6	0	8	8	8	8	6	6	80	D	22	13	F	SLP1DF02N1A04	SLP1DF02N3B04	0.35
	4	0.6	0	8	8	8	8			130	D	22	13	F	SLP1DF02E1A04	SLP1DF02E3B04	0.35
	4	0.6	0	8	8	8	8	6	6	120	D	22	13	F	SLP1DF02V1A04	SLP1DF02V3B04	0.35
	5	0.65	0	4	2.5	4	2.5	2.5	2	80	D	22	13	F	SLP1DF02N1B05	SLP1DF02N3B05	0.35
	5	0.65	0	4	2.5	4	2.5			130	D	22	13	F	SLP1DF02E1B05	SLP1DF02E3B05	0.35
	5	0.65	0	4	2.5	4	2.5	2.5	2	120	D	22	13	F	SLP1DF02V1B05	SLP1DF02V3B05	0.35
	6	0.8	0	3	2	3	2	2.5	2	80	D	22	13	F	SLP1DF02N1B06	SLP1DF02N3B06	0.35
	6	0.8	0	3	2	3	2			130	D	22	13	F	SLP1DF02E1B06	SLP1DF02E3B06	0.35
	6	0.8	0	3	2	3	2	2.5	2	120	D	22	13	F	SLP1DF02V1B06	SLP1DF02V3B06	0.35
3/8″	5	0.65	0	4	2.5	4	2.5	2.5	2	80	D	22	13	F	SLP1DF02N1C05	SLP1DF02N3C05	0.46
	5	0.65	0	4	2.5	4	2.5			130	D	22	13	F	SLP1DF02E1C05	SLP1DF02E3C05	0.46
	5	0.65	0	4	2.5	4	2.5	2.5	2	120	D	22	13	F	SLP1DF02V1C05	SLP1DF02V3C05	0.46
	6	0.8	0	3	2	3	2	2.5	2	80	D	22	13	F	SLP1DF02N1C06	SLP1DF02N3C06	0.46
	6	0.8	0	3	2	3	2			130	D	22	13	F	SLP1DF02E1C06	SLP1DF02E3C06	0.46
	6	0.8	0	3	2	3	2	2.5	2	120	D	22	13	F	SLP1DF02V1C06	SLP1DF02V3C06	0.46
1/2″	5	0.65	0	4	2.5	4	2.5	2.5	2	80	D	22	13	F	SLP1DF02N1D05	SLP1DF02N3D05	0.43
	5	0.65	0	4	2.5	4	2.5			130	D	22	13	F	SLP1DF02E1D05	SLP1DF02E3D05	0.43
	5	0.65	0	4	2.5	4	2.5	2.5	2	120	D	22	13	F	SLP1DF02V1D05	SLP1DF02V3D05	0.43
	6	0.8	0	3	2	3	2	2.5	2	80	D	22	13	F	SLP1DF02N1D06	SLP1DF02N3D06	0.43
	6	0.8	0	3	2	3	2			130	D	22	13	F	SLP1DF02E1D06	SLP1DF02E3D06	0.43
	6	0.8	0	3	2	3	2	2.5	2	120	D	22	13	F	SLP1DF02V1D06	SLP1DF02V3D06	0.43

SLP small series 2/2-way direct acting solenoid valve · normllay closed

1.2/2 way normally closed , closed when de-energized ， open when energized
2. Ambient temp： 0~65℃
3. Flow as the arrow ,mounts in any position ; best position is solenoid vertical and upright direction
4. Voltage： AC220V/230V/240V/110V/24V 50/60HZ DC24V/12V
5. Seals： Can choose NBR、EPDM、VITON to fit to control of different media
6. Coil can fix SM Coil. AC 220V/AC110V/AC24V/DC24V



Coils Type:D



Coils Type:N

Valve Selection List

Pipe Conn -ection	Orifice mm	CV Factor	Operating pressure Differential (kgf/cm²) Min.	Max. Air、Gas water、Hotwater liquid AC	Max. Air、Gas water、Hotwater liquid DC	Max. Light oil AC	Max. Light oil DC	Max. Temp. ℃	Coil Type	Power consumption VA AC 220V	Power consumption W DC 24V	Coil Class	Model Code Follows Voltage are 220VAC50/60HZ Forged brass	Model Code Follows Voltage are 220VAC50/60HZ SS316
3/8"	3	0.3	0	13	13	10	10	80	D	22	13	F	SLP1DF02N1C03	SLP1DF02N3C03
	3	0.3	0	13	13			130	D	22	13	F	SLP1DF02E1C03	SLP1DF02E3C03
	3	0.3	0	13	13	10	10	120	D	22	13	F	SLP1DF02V1C03	SLP1DF02V3C03
	4	0.6	0	8	8	6	6	80	D	22	13	F	SLP1DF02N1C04	SLP1DF02N3C04
	4	0.6	0	8	8			130	D	22	13	F	SLP1DF02E1C04	SLP1DF02E3C04
	4	0.6	0	8	8	6	6	120	D	22	13	F	SLP1DF02V1C04	SLP1DF02V3C04

N.W:0.34kg

External Dimensions：

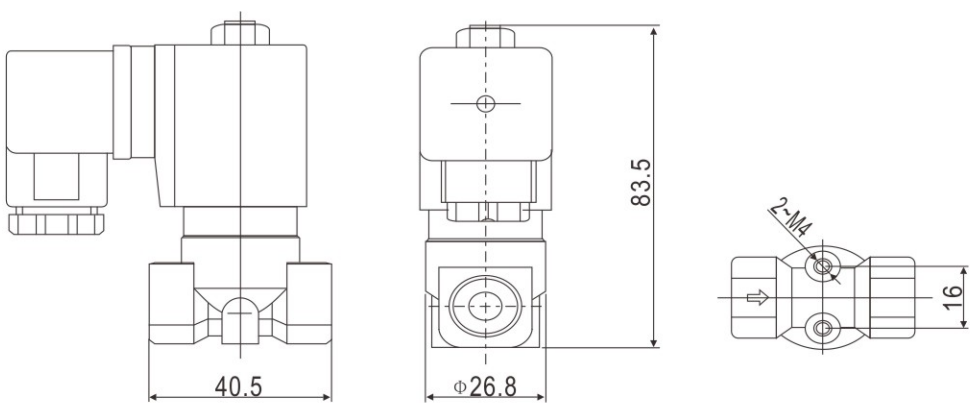

SLP compact series 2/2-way direct acting solenoid valve · normally open

1: 2-Way normally open solenoid valve, Open when de-energized, Closed when energized.
2: Serialized products, small in size, large flow rate, widely use
3: Body material: forged brass.316 stainless steel.
4: Ambient Temp. 0℃~65℃, Fluids Temp 0℃~130℃.
5: Flow as the arrow, mounts in any position; Best position is solenoid vertical and upright direction.
6: Voltage: 220VAC/230VAC/240VAC/110VAC/24VAC 50/60HZ 24VDC/12VDC; Voltage Tolerance: +10% to -10% applicable voltage can fix Nass coil
7: This series valves are offered NBR、VITON、EPDM etc For Seals and diaphragm to provide on-off control of various fluids.



Body:9 & 5



Body:1 & 3



Construction, External Dimensions Chart

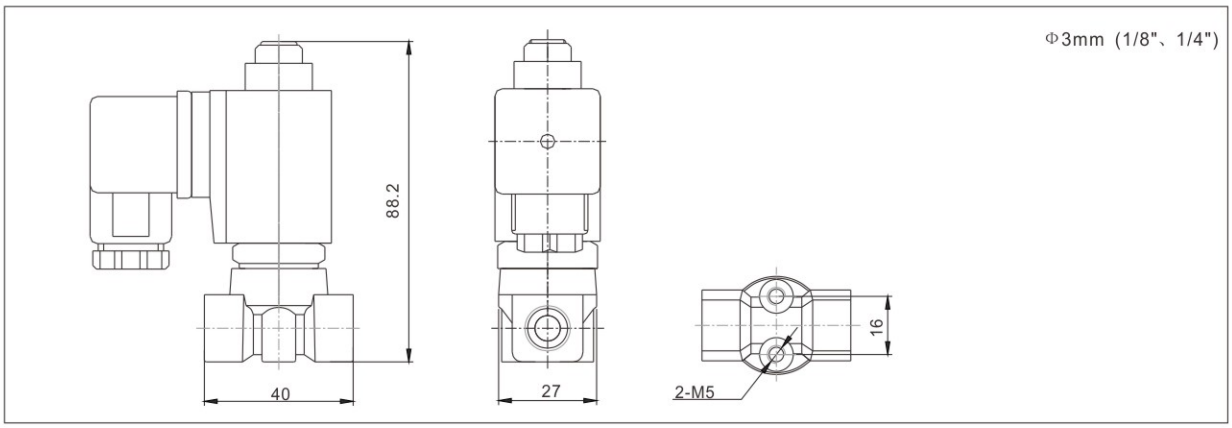

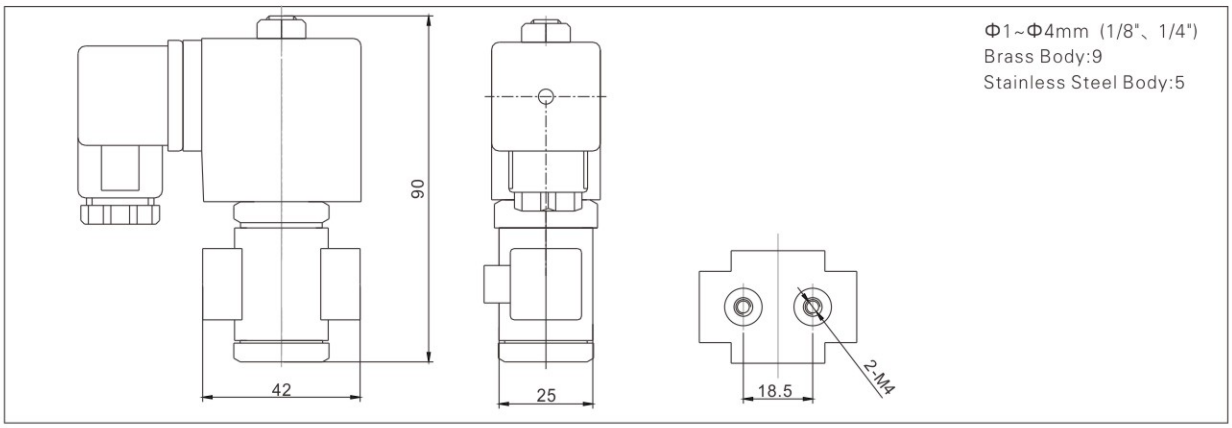

SLP compact series 2/2-way direct acting solenoid valve · normally open

Valve Selection List

Pipe Conn -ection	Orifice mm	CV Factor	Operating pressure differential (kgf/cm²) Min.	Max. Air Gas	Max. Water Hot water Liquids	Max. Light oil	Max. fluids Temp. ℃	Coil Type	consumption VA AC 220V	consumption W DC 24V	Coil Class	Model Code Follows Voltage are 220VAC Body material: Forged brass	Model Code Follows Voltage are 220VAC Body material: SS316	Weight (KG)
1/8"	1	0.04	0	30	30	25	80	D	22	13	F	SLP2DF02N9A01	SLP2DF02N5A01	0.4
	1	0.04	0	30	30		130	D	22	13	F	SLP2DF02E9A01	SLP2DF02E5A01	0.4
	1	0.04	0	30	30	25	120	D	22	13	F	SLP2DF02V9A01	SLP2DF02V5A01	0.4
	1.5	0.09	0	20	20	15	80	D	22	13	F	SLP2DF02N9AC2	SLP2DF02N5AC2	0.4
	1.5	0.09	0	20	20		130	D	22	13	F	SLP2DF02E9AC2	SLP2DF02E5AC2	0.4
	1.5	0.09	0	20	20	15	120	D	22	13	F	SLP2DF02V9AC2	SLP2DF02V5AC2	0.4
	2.5	0.2	0	15	15	12	80	D	22	13	F	SLP2DF02N9AC3	SLP2DF02N5AC3	0.4
	2.5	0.2	0	15	15		130	D	22	13	F	SLP2DF02E9AC3	SLP2DF02E5AC3	0.4
	2.5	0.2	0	15	15	12	120	D	22	13	F	SLP2DF02V9AC3	SLP2DF02V5AC3	0.4
	3	0.25	0	12	12	10	80	D	22	13	F	SLP2DF02N9A03	SLP2DF02N5A03	0.4
	3	0.25	0	12	12		130	D	22	13	F	SLP2DF02E9A03	SLP2DF02E5A03	0.4
	3	0.25	0	12	12	10	120	D	22	13	F	SLP2DF02V9A03	SLP2DF02V5A03	0.4
	3	0.3	0	6	6	5	80	D	22	13	F	SLP2DF02N1A03	SLP2DF02N3A03	0.46
	3	0.3	0	6	6		130	D	22	13	F	SLP2DF02E1A03	SLP2DF02E3A03	0.46
	3	0.3	0	6	6	5	120	D	22	13	F	SLP2DF02V1A03	SLP2DF02V3A03	0.46
	4	0.4	0	5	5	4	80	D	22	13	F	SLP2DF02N9A04	SLP2DF02N5A04	0.39
	4	0.4	0	5	5		130	D	22	13	F	SLP2DF02E9A04	SLP2DF02E5A04	0.39
	4	0.4	0	5	5	4	120	D	22	13	F	SLP2DF02V9A04	SLP2DF02V5A04	0.39
1/4"	1	0.04	0	30	30	25	80	D	22	13	F	SLP2DF02N9B01	SLP2DF02N5B01	0.39
	1	0.04	0	30	30		130	D	22	13	F	SLP2DF02E9B01	SLP2DF02E5B01	0.39
	1	0.04	0	30	30	25	120	D	22	13	F	SLP2DF02V9B01	SLP2DF02V5B01	0.39
	1.5	0.09	0	20	20	15	80	D	22	13	F	SLP2DF02N9BC2	SLP2DF02N5BC2	0.39
	1.5	0.09	0	20	20		130	D	22	13	F	SLP2DF02E9BC2	SLP2DF02E5BC2	0.39
	1.5	0.09	0	20	20	15	120	D	22	13	F	SLP2DF02V9BC2	SLP2DF02V5BC2	0.39
	2.5	0.2	0	15	15	12	80	D	22	13	F	SLP2DF02N9BC3	SLP2DF02N5BC3	0.39
	2.5	0.2	0	15	15		130	D	22	13	F	SLP2DF02E9BC3	SLP2DF02E5BC3	0.39
	2.5	0.2	0	15	15	12	120	D	22	13	F	SLP2DF02V9BC3	SLP2DF02V5BC3	0.39
	3	0.25	0	12	12	10	80	D	22	13	F	SLP2DF02N9B03	SLP2DF02N5B03	0.39
	3	0.25	0	12	12		130	D	22	13	F	SLP2DF02E9B03	SLP2DF02E5B03	0.39
	3	0.25	0	12	12	10	120	D	22	13	F	SLP2DF02V9B03	SLP2DF02V5B03	0.39
	3	0.3	0	6	6	5	80	D	22	13	F	SLP2DF02N1B03	SLP2DF02N3B03	0.45
	3	0.3	0	6	6		130	D	22	13	F	SLP2DF02E1B03	SLP2DF02E3B03	0.45
	3	0.3	0	6	6	5	120	D	22	13	F	SLP2DF02V1B03	SLP2DF02V3B03	0.45
	4	0.4	0	5	5	4	80	D	22	13	F	SLP2DF02N9B04	SLP2DF02N5B04	0.38
	4	0.4	0	5	5		130	D	22	13	F	SLP2DF02E9B04	SLP2DF02E5B04	0.38
	4	0.4	0	5	5	4	120	D	22	13	F	SLP2DF02V9B04	SLP2DF02V5B04	0.38

SLP small series 2/2-way pilot operated solenoid valve · normally closed

1: 2-Way normally closed solenoid valve, Closed when de-energized, open when energized.
2: Serialized products, small in size, large flow rate, widely use
3: Body material: forged brass.Orifice: ϕ 10.5mm.
4: Ambient Temp. 0℃~65℃, Fluids Temp: 0℃~130℃ .Max allowable pressure 17 bar.
5: Flow as the arrow, mounts in any position; Best position is solenoid vertical and upright direction.
6: Voltage: 220VAC/230VAC/240VAC/110VAC/24VAC 50/60HZ 24VDC/12VDC; Voltage Tolerance: +10% to -10% applicable voltage
7: This series valves are offered NBR、VITON、EPDM etc For Seals and diaphragm to provide on-off control of various fluids.
8: Coil can fix SM Coil. AC 220V/AC110V/AC24V/DC24V Ex-proof 3C certificate number: 2020312307000034



Construction, External Dimensions Chart

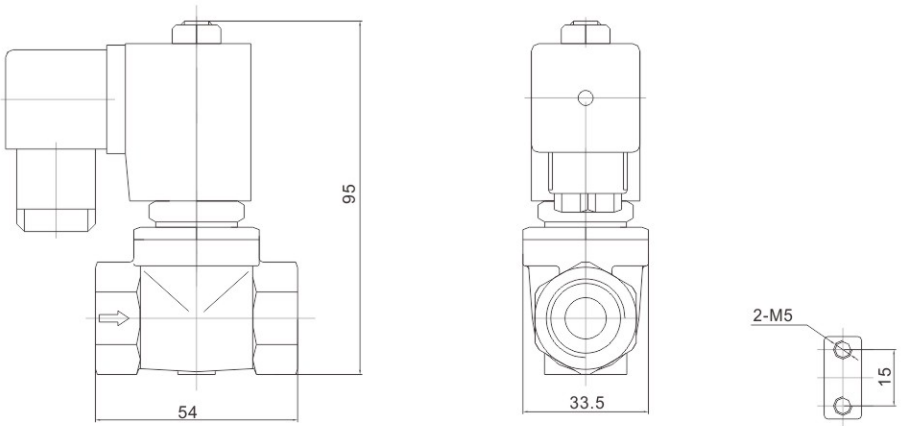

Valve Selection List

Pipe Conn -ection	Orifice mm	CV Factor	Operating pressure differential (kgf/cm²) Min.	Max. Air Gas AC	Max. Air Gas DC	Max. Water Hot water AC	Max. Water Hot water DC	Max. Light oil AC	Max. Light oil DC	Max. Temp. ℃	Coil Type	consumption VA AC 220V	consumption W DC 24V	Coil Class	Model Code Follows Voltage are 220VAC	Weight (KG)
1/4″	10.5	1.47	0.1	16	10	16	10	13	10	80	D	22	13	F	SLP1DF02N1BC9	0.51
	10.5	1.47	0.1	16	10	16	10			130	D	22	13	F	SLP1DF02E1BC9	0.51
	10.5	1.47	0.1	16	10	16	10	13	10	120	D	22	13	F	SLP1DF02V1BC9	0.51
3/8″	10.5	1.68	0.1	16	10	16	10	13	10	80	D	22	13	F	SLP1DF02N1CC9	0.49
	10.5	1.68	0.1	16	10	16	10			130	D	22	13	F	SLP1DF02E1CC9	0.49
	10.5	1.68	0.1	16	10	16	10	13	10	120	D	22	13	F	SLP1DF02V1CC9	0.49
1/2″	10.5	1.75	0.1	16	10	16	10	13	10	80	D	22	13	F	SLP1DF02N1DC9	0.46
	10.5	1.75	0.1	16	10	16	10			130	D	22	13	F	SLP1DF02E1DC9	0.46
	10.5	1.75	0.1	16	10	16	10	13	10	120	D	22	13	F	SLP1DF02V1DC9	0.46

SLP small series 2/2-way pilot operated solenoid valve · normally closed

1. 2-Way Normally closed solenoid valve,closed when de-energized, open when energized.
2. Serialized produvts,small in size,large flow rate,widely use
3. Body material: SS316 Orifice: Φ9mm
4. Ambient Temp 0℃~65℃ Fluids Temp.: 0℃~130℃
5. Flows as the arrow, mounts in any position; best position is solenoid valve vertical and upright direction.
6. Voltage:AC24V/110V/220V/230V/240V 50/60HZ DC24V/12V Voltage Tolerance:+10%~-10% applicable voltage
7. This series valves are offered NBR,VITON,EPDM Etc, For seals and diaphragm to provide on/off control of various fluids.
8. Coil can fix SM Coil. AC 220V/AC110V/AC24V/DC24V
   Ex-proof 3C certificate number: 2020312307000034



Construction, External Dimensions Chart

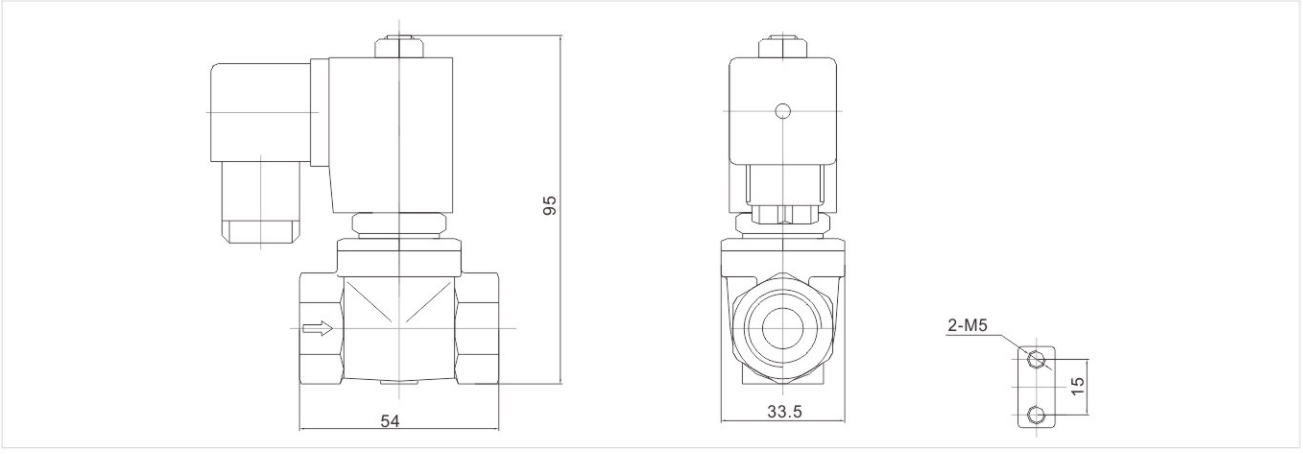

Valve Selection List

Pipe Conn -ection	Orifice mm	CV Factor	Operating pressure differential (kgf/cm²) Min.	Max. Air Gas AC	Max. Air Gas DC	Max. Water Hot water AC	Max. Water Hot water DC	Max. Light oil AC	Max. Light oil DC	Max. Temp. ℃	Coil Type	consumption VA AC 220V	consumption W DC 24V	Coil Class	Model Code Follows Voltage are 220VAC	Weight (KG)
1/4″	9	1.2	0.1	16	10	16	10	13	10	80	D	22	13	F	SLP1DF02N3BC9	0.51
	9	1.2	0.1	16	10	16	10			130	D	22	13	F	SLP1DF02E3BC9	0.51
	9	1.2	0.1	16	10	16	10	13	10	120	D	22	13	F	SLP1DF02V3BC9	0.51
3/8″	9	1.2	0.1	16	10	16	10	13	10	80	D	22	13	F	SLP1DF02N3CC9	0.49
	9	1.2	0.1	16	10	16	10			130	D	22	13	F	SLP1DF02E3CC9	0.49
	9	1.2	0.1	16	10	16	10	13	10	120	D	22	13	F	SLP1DF02V3CC9	0.49
1/2″	9	1.2	0.1	16	10	16	10	13	10	80	D	22	13	F	SLP1DF02N3DC9	0.46
	9	1.2	0.1	16	10	16	10			130	D	22	13	F	SLP1DF02E3DC9	0.46
	9	1.2	0.1	16	10	16	10	13	10	120	D	22	13	F	SLP1DF02V3DC9	0.46

SLP small series 2/2-way direct acting solenoid valve · normallyclosed

1: 2-Way normally closed solenoid valve, Closed when de-energized, open when energized.
2: Serialized products, small in size, large flow rate, widely use
3: Body material: forged brass.Orifice: ϕ 10.5mm.
4: Ambient Temp. 0℃~65℃, Fluids Temp: 0℃~130℃ .
5: Flow as the arrow, mounts in any position; Best position is solenoid vertical and upright direction.
6: Voltage: 220VAC/230VAC/240VAC/110VAC/24VAC 50/60HZ 24VDC/12VDC; Voltage Tolerance: +10% to -10% applicable voltage
7: This series valves are offered NBR、VITON、EPDM etc For Seals and diaphragm to provide on-off control of various fluids.
8: Coil can fix SM Coil. AC 220V/AC110V/AC24V/DC24V Ex-proof 3C certificate number: 2020312307000034



Construction, External Dimensions Chart

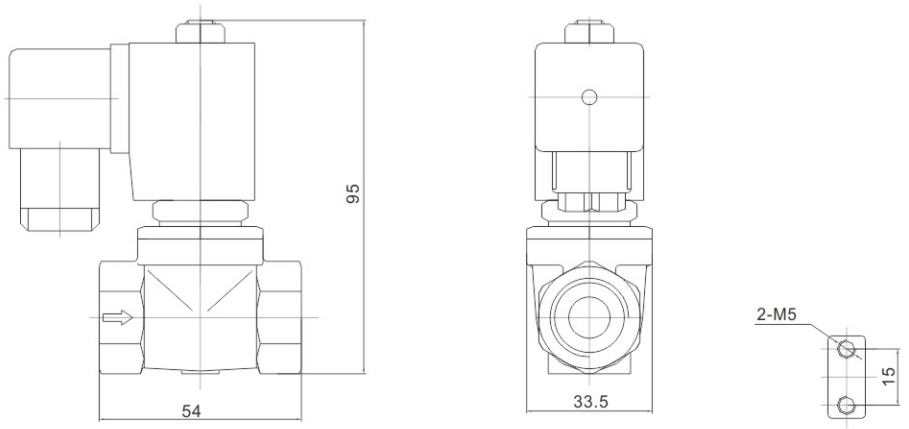

Valve Selection List

Pipe Conn -ection	Orifice mm	CV Factor	Operating pressure differential (kgf/cm²) Min.	Max. Air Gas AC	Max. Air Gas DC	Max. Water Hot water AC	Max. Water Hot water DC	Max. Light oil AC	Max. Light oil DC	Max. Temp. ℃	Coil Type	consumption VA AC 220V	consumption W DC 24V	Coil Class	Model Code Follows Voltage are 220VAC	Weight (KG)
1/4″	10.5	1.47	0	16	10	16	10	13	10	80	D	22	13	F	SLP1DF02N1B10	0.51
	10.5	1.47	0	16	10	16	10			130	D	22	13	F	SLP1DF02E1B10	0.51
	10.5	1.47	0	16	10	16	10	13	10	120	D	22	13	F	SLP1DF02V1B10	0.51
3/8″	10.5	1.68	0	16	10	16	10	13	10	80	D	22	13	F	SLP1DF02N1C10	0.49
	10.5	1.68	0	16	10	16	10			130	D	22	13	F	SLP1DF02E1C10	0.49
	10.5	1.68	0	16	10	16	10	13	10	120	D	22	13	F	SLP1DF02V1C10	0.49
1/2″	10.5	1.75	0	16	10	16	10	13	10	80	D	22	13	F	SLP1DF02N1D10	0.46
	10.5	1.75	0	16	10	16	10			130	D	22	13	F	SLP1DF02E1D10	0.46
	10.5	1.75	0	16	10	16	10	13	10	120	D	22	13	F	SLP1DF02V1D10	0.46

SLP small series 2/2-way direct acting solenoid valve · normallyclosed

1. 2-Way Normally closed solenoid valve,closed when de-energized, open when energized.
2. Serialized produvts, small in size, large flow rate, widely use
3. Body material: SS316 Orifice: Φ9mm
4. Ambient Temp 0℃~65℃ Fluids Temp.: 0℃~130℃
5. Flows as the arrow, mounts in any position; best position is solenoid valve vertical and upright direction.
6. Voltage:AC24V/110V/220V/230V/240V 50/60HZ
   DC24V/12V Voltage Tolerance:+10%~-10% applicable voltage
7. This series valves are offered NBR, VITON, EPDM Etc, For seals and diaphragm to provide on/off control of various fluids.
8. Coil can fix SM Coil. AC 220V/AC110V/AC24V/DC24V
   Ex-proof 3C certificate number: 2020312307000034



Construction & External Dimensions Chart

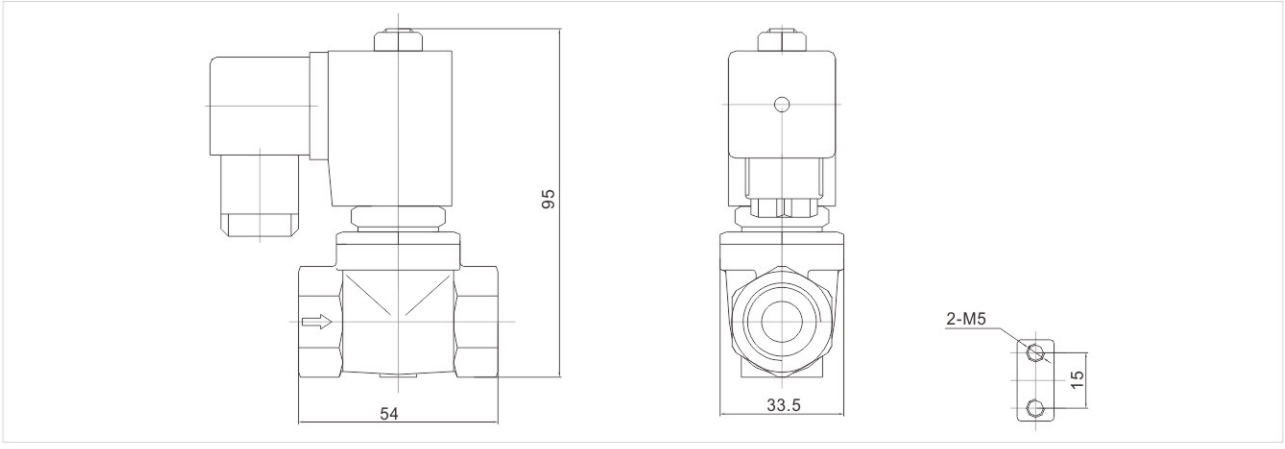

Valve Selection List

Pipe Conn -ection	Orifice mm	CV Factor	Operating pressure differential (kgf/cm²) Min.	Max. Air Gas AC	Max. Air Gas DC	Max. Water Hot water AC	Max. Water Hot water DC	Max. Light oil AC	Max. Light oil DC	Max. Temp. ℃	Coil Type	consumption VA AC 220V	consumption W DC 24V	Coil Class	Model Code Follows Voltage 220VAC	Weight (KG)
1/4″	9	1.2	0	16	10	16	10	13	10	80	D	22	13	F	SLP1DF02N3B10	0.51
	9	1.2	0	16	10	16	10			130	D	22	13	F	SLP1DF02E3B10	0.51
	9	1.2	0	16	10	16	10	13	10	120	D	22	13	F	SLP1DF02V3B10	0.51
3/8″	9	1.2	0	16	10	16	10	13	10	80	D	22	13	F	SLP1DF02N3C10	0.49
	9	1.2	0	16	10	16	10			130	D	22	13	F	SLP1DF02E3C10	0.49
	9	1.2	0	16	10	16	10	13	10	120	D	22	13	F	SLP1DF02V3C10	0.49
1/2″	9	1.2	0	16	10	16	10	13	10	80	D	22	13	F	SLP1DF02N3D10	0.46
	9	1.2	0	16	10	16	10			130	D	22	13	F	SLP1DF02E3D10	0.46
	9	1.2	0	16	10	16	10	13	10	120	D	22	13	F	SLP1DF02V3D10	0.46

SLP small series 2/2-way pilot operated solenoid valve · normally open

1: 2-Way normally open solenoid valve, Open when de-energized, closed when energized.
2: Serialized products, small in size, large flow rate, widely use
3: Body material: forged brass. Orifice: ϕ 10.5mm.
4: Ambient Temp. 0℃~65℃, Fluids Temp: 0℃~130℃ .
5: Flow as the arrow, mounts in any position; Best position is solenoid vertical and upright direction.
6: Voltage: 220VAC/230VAC/240VAC/110VAC/24VAC 50/60HZ 24VDC/12VDC; Voltage Tolerance: +10% to -10% applicable voltage
7: This series valves are offered NBR、VITON、EPDM etc For Seals and diaphragm to provide on-off control of various fluids.



Construction, External Dimensions Chart

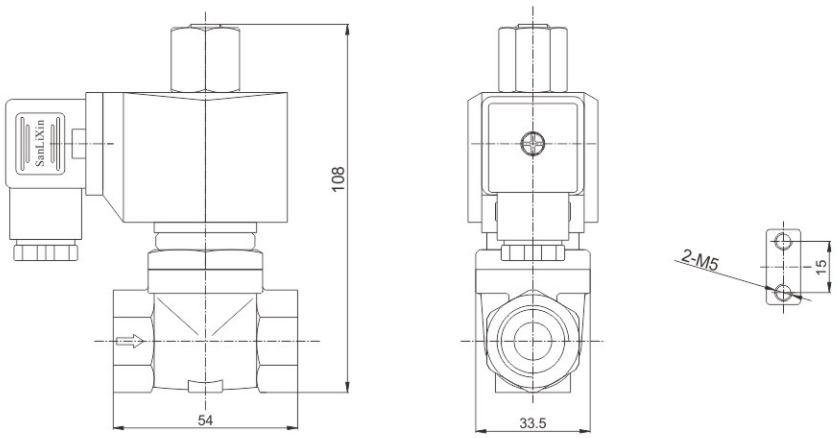

Valve Selection List

Pipe Conn -ection	Orifice mm	CV Factor	Operating pressure differential (bar) Min.	Max. Air Gas	Max. Water Hot water	Max. Light oil ≤20CST	Max. Temp. ℃	Coil Type	consumption VA AC 220V	consumption W DC 24V	Coil Class	Model Code Follows Voltage 220VAC	Weight KG
1/4″	10.5	1.47	0.1	13	13	8	80	D	20	20	F	SLP2DF02N1BC9	0.66
	10.5	1.47	0.1	13	13		130	D	20	20	F	SLP2DF02E1BC9	0.66
	10.5	1.47	0.1	13	13	8	120	D	20	20	F	SLP2DF02V1BC9	0.66
3/8″	10.5	1.68	0.1	13	13	8	80	D	20	20	F	SLP2DF02N1CC9	0.64
	10.5	1.68	0.1	13	13		130	D	20	20	F	SLP2DF02E1CC9	0.64
	10.5	1.68	0.1	13	13	8	120	D	20	20	F	SLP2DF02V1CC9	0.64
1/2″	10.5	1.75	0.1	13	13	8	80	D	20	20	F	SLP2DF02N1DC9	0.61
	10.5	1.75	0.1	13	13		130	D	20	20	F	SLP2DF02E1DC9	0.61
	10.5	1.75	0.1	13	13	8	120	D	20	20	F	SLP2DF02V1DC9	0.61

SLP small series 2/2-way pilot operated solenoid valve · normally open

1: 2-Way normally open solenoid valve, Open when de-energized, closed when energized.
2: Serialized products, small in size, large flow rate, widely use
3: Body material: SS316. Orifice: φ9mm.
4: Ambient Temp. 0℃~65℃
5: Flow as the arrow, mounts in any position; Best position is solenoid vertical and upright direction.
6: Voltage: 220VAC/230VAC/240VAC/110VAC/24VAC 50/60HZ 24VDC/12VDC; Voltage Tolerance: +10% to -10% applicable voltage
7: This series valves are offered NBR、VITON、EPDM etc For Seals and diaphragm to provide on-off control of various fluids.



Construction, External Dimensions Chart

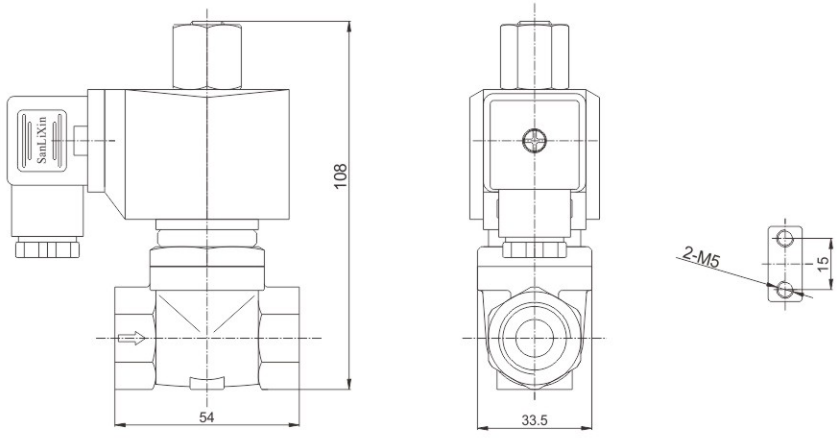

型号规格表

Pipe Conn -ection	Orifice mm	CV Factor	Operating pressure differential (bar) Min.	Max. Air Gas	Max. Water Hot water	Max. Light oil ≤20CST	Max. Temp. ℃	Coil Type	consumption VA AC 220V	consumption W DC 24V	Coil Class	Model Code Follows Voltage 220VAC	Weight KG
1/4″	9	1.2	0.1	13	13	8	80	D	20	20	F	SLP2DF02N3BC9	0.66
	9	1.2	0.1	13	13		130	D	20	20	F	SLP2DF02E3BC9	0.66
	9	1.2	0.1	13	13	8	120	D	20	20	F	SLP2DF02V3BC9	0.66
3/8″	9	1.2	0.1	13	13	8	80	D	20	20	F	SLP2DF02N3CC9	0.64
	9	1.2	0.1	13	13		130	D	20	20	F	SLP2DF02E3CC9	0.64
	9	1.2	0.1	13	13	8	120	D	20	20	F	SLP2DF02V3CC9	0.64
1/2″	9	1.2	0.1	13	13	8	80	D	20	20	F	SLP2DF02N3DC9	0.61
	9	1.2	0.1	13	13		130	D	20	20	F	SLP2DF02E3DC9	0.61
	9	1.2	0.1	13	13	8	120	D	20	20	F	SLP2DF02V3DC9	0.61

SLP 2/2-way large diameter pilot operated solenoid valve · normally closed

1: 2-Way normally closed solenoid valve, Closed when de-energized, open when energized.
2: Serialized products, small in size, large flow rate, widely use
3: Body material: forged brass.Orifice: ϕ 13~15mm.
4: Ambient Temp. 0℃~65℃, Fluids Temp: 0℃~130℃, Max allowable pressure 20 bar.
5: Flow as the arrow, mounts in any position; Best position is solenoid vertical and upright direction.
6: Voltage: 220VAC/230VAC/240VAC/110VAC/24VAC 50/60HZ 24VDC/12VDC;
Voltage Tolerance: +10% to -10% applicable voltage
7: This series valves are offered NBR、VITON、EPDM etc
For Seals and diaphragm to provide on-off control of various fluids.
8: Can fix expolsion-proof coil
9: Coil can fix SM Coil. AC 220V/AC110V/AC24V/DC24V
Ex-proof 3C certificate number: 2020312307000034





Normally closed

De-energized
Closed

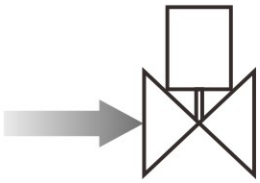

Energized
Open



Construction, External Dimensions Chart

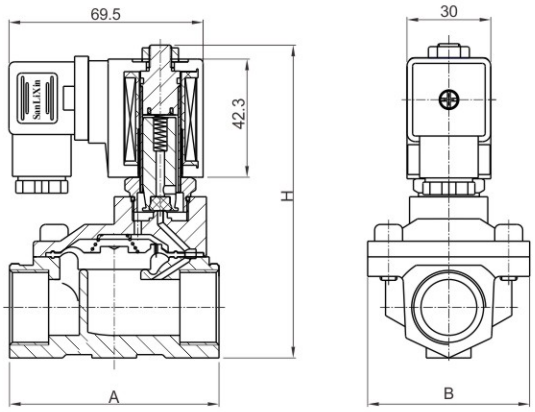

Flow Chart

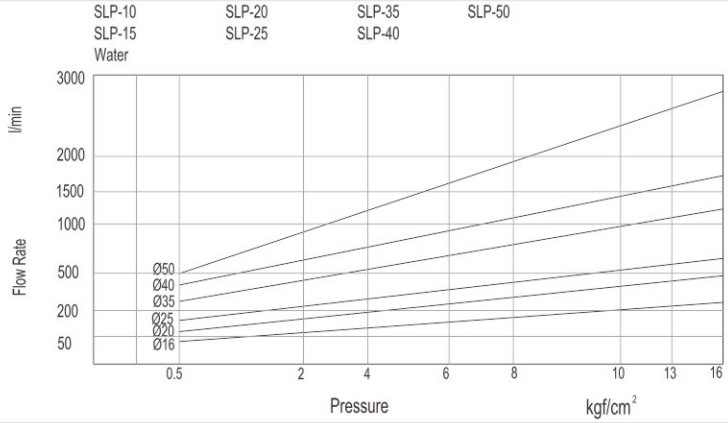

SLP 2/2-way large diameter pilot operated solenoid valve · normally closed

Valve Selection List

Pipe Conn -ection	Orifice mm	CV Factor	Operating pressure differential (kgf/cm²)				Max. Fluids Temp.	Coil Type	Power consumption		Coil Class	External Dimensions Length x Width x Height A x B x H	Model Code Follows Voltage are 220VAC 50/60HZ	Weight (KG)
			Min.	Max.					VA	W				
				Air Gas	Water Hot water Liquids	Light oil ≤20CST			AC 220 V	DC 24 V				
3/8″	13	4.5	0.5	16	16	13	80	D	22	13	F	66×48×108	SLP1DF02N1C13	0.8
	13	4.5	0.5	16	16		130	D	22	13	F	66×48×108	SLP1DF02E1C13	0.8
	13	4.5	0.5	16	16	13	120	D	22	13	F	66×48×108	SLP1DF02V1C13	0.8
1/2″	13	4.5	0.5	16	16	13	80	D	22	13	F	66×48×108	SLP1DF02N1D13	0.7
	13	4.5	0.5	16	16		130	D	22	13	F	66×48×108	SLP1DF02E1D13	0.7
	13	4.5	0.5	16	16	13	120	D	22	13	F	66×48×108	SLP1DF02V1D13	0.7
3/4″	20	7.6	0.5	16	16	13	80	D	22	13	F	75×58×113	SLP1DF02N1E20	0.9
	20	7.6	0.5	16	16		130	D	22	13	F	75×58×113	SLP1DF02E1E20	0.9
	20	7.6	0.5	16	16	13	120	D	22	13	F	75×58×113	SLP1DF02V1E20	0.9
1″	20	7.6	0.5	16	16	13	80	D	22	13	F	81×58×119	SLP1DF02N1G20	1.1
	20	7.6	0.5	16	16		130	D	22	13	F	81×58×119	SLP1DF02E1G20	1.1
	20	7.6	0.5	16	16	13	120	D	22	13	F	81×58×119	SLP1DF02V1G20	1.1
	25	12	0.5	16	16	13	80	D	22	13	F	96×70×126	SLP1DF02N1G25	1.4
	25	12	0.5	16	16		130	D	22	13	F	96×70×126	SLP1DF02E1G25	1.4
	25	12	0.5	16	16	13	120	D	22	13	F	96×70×126	SLP1DF02V1G25	1.4
11/4″	32	22	0.5	16	16	13	80	D	22	13	F	125×96×135	SLP1DF02N1H32	2.1
	32	22	0.5	16	16		130	D	22	13	F	125×96×135	SLP1DF02E1H32	2.1
	32	22	0.5	16	16	13	120	D	22	13	F	125×96×135	SLP1DF02V1H32	2.1
	35	22	0.5	16	16	13	80	D	22	13	F	131×96×145	SLP1DF02N1H35	2.8
	35	22	0.5	16	16		130	D	22	13	F	131×96×145	SLP1DF02E1H35	2.8
	35	22	0.5	16	16	13	120	D	22	13	F	131×96×145	SLP1DF02V1H35	2.8
11/2″	40	30	0.5	16	16	13	80	D	22	13	F	131×96×145	SLP1DF02N1J40	2.7
	40	30	0.5	16	16		130	D	22	13	F	131×96×145	SLP1DF02E1J40	2.7
	40	30	0.5	16	16	13	120	D	22	13	F	131×96×145	SLP1DF02V1J40	2.7
2″	40	30	0.5	16	16	13	80	D	22	13	F	131×96×152	SLP1DF02N1K40	3.1
	40	30	0.5	16	16		130	D	22	13	F	131×96×152	SLP1DF02E1K40	3.1
	40	30	0.5	16	16	13	120	D	22	13	F	131×96×152	SLP1DF02V1K40	3.1
	50	48	0.5	16	16	13	80	D	22	13	F	165×120×157	SLP1DF02N1K50	4
	50	48	0.5	16	16		130	D	22	13	F	165×120×157	SLP1DF02E1K50	4
	50	48	0.5	16	16	13	120	D	22	13	F	165×120×157	SLP1DF02V1K50	4

SLP 2/2-way large diameter pilot operated solenoid valve · normally closed

1: 2-Way normally closed solenoid valve, Closed when de-energized, open when energized.

2: Body material: 316 stainless steel

3: Max. Allowable pressure 20kgf/cm^2; Ambient Temp. 0℃~65℃

4: Serialized products, small in size, large flow rate, widely use

5: Flow as the arrow, mounts in any position; Best position is Solenoid vertical and upright direction.

6: Voltage: 220VAC/230VAC/240VAC/110VAC/24VAC 50/60HZ 24VDC/12VDC;
Voltage Tolerance: +10% to -10% applicable voltage

7: Coil can fix Germany Nass Coil, for orifice under DN25 only.

8: This series valves are offered NBR、VITON、EPDM etc
for Seals and diaphragm to provide on-off control of various fluids.

9: Coil can fix SM Coil. AC 220V/AC110V/AC24V/DC24V



Normally closed



Construction, External Dimensions Chart

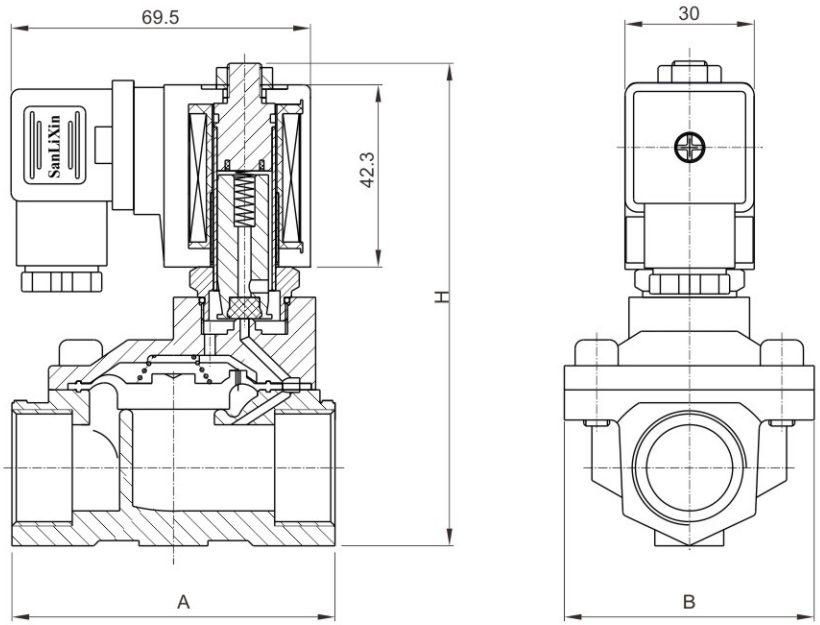

SLP 2/2-way large diameter pilot operated solenoid valve · normally closed

Valve Selection List

Pipe Conn -ection	Orifice mm	CV Factor	Operating pressure differential (kgf/cm^2)				Max. Fluids Temp.	Coil Type	Power consumption		Coil Class	External Dimensions Length x Width x Height A x B x H	Model Code Follows Voltage are 220VAC 50/60HZ	Weight (KG)
			Min.	Max.					VA	W				
				Air Gas	Water Hot water Liquids	Light oil ≤20CST			AC 220 V	DC 24 V				
3/8″	13	4.5	0.5	16	16	13	80	D	22	13	F	66×48×108	SLP1DF02N3C13	0.75
	13	4.5	0.5	16	16		130	D	22	13	F	66×48×108	SLP1DF02E3C13	0.75
	13	4.5	0.5	16	16	13	120	D	22	13	F	66×48×108	SLP1DF02V3C13	0.75
1/2″	13	4.5	0.5	16	16	13	80	D	22	13	F	66×48×108	SLP1DF02N3D13	0.7
	13	4.5	0.5	16	16		130	D	22	13	F	66×48×108	SLP1DF02E3D13	0.7
	13	4.5	0.5	16	16	13	120	D	22	13	F	66×48×108	SLP1DF02V3D13	0.7
3/4″	20	7.6	0.5	16	16	13	80	D	22	13	F	75×58×113	SLP1DF02N3E20	0.9
	20	7.6	0.5	16	16		130	D	22	13	F	75×58×113	SLP1DF02E3E20	0.9
	20	7.6	0.5	16	16	13	120	D	22	13	F	75×58×113	SLP1DF02V3E20	0.9
1″	20	7.6	0.5	16	16	13	80	D	22	13	F	81×58×119	SLP1DF02N3G20	1.0
	20	7.6	0.5	16	16		130	D	22	13	F	81×58×119	SLP1DF02E3G20	1.0
	20	7.6	0.5	16	16	13	120	D	22	13	F	81×58×119	SLP1DF02N3G20	1.0
	25	12	0.5	16	16	13	80	D	22	13	F	96×70×126	SLP1DF02N3G25	1.3
	25	12	0.5	16	16		130	D	22	13	F	96×70×126	SLP1DF02E3G25	1.3
	25	12	0.5	16	16	13	120	D	22	13	F	96×70×126	SLP1DF02V3G25	1.3
1 1/4″	32	22	0.5	16	16	13	80	D	22	13	F	125×96×135	SLP1DF02N3H32	1.9
	32	22	0.5	16	16		130	D	22	13	F	125×96×135	SLP1DF02E3H32	1.9
	32	22	0.5	16	16	13	120	D	22	13	F	125×96×135	SLP1DF02V3H32	1.9
	35	22	0.5	16	16	13	80	D	22	13	F	131×96×145	SLP1DF02N3H35	2.6
	35	22	0.5	16	16		130	D	22	13	F	131×96×145	SLP1DF02E3H35	2.6
	35	22	0.5	16	16	13	120	D	22	13	F	131×96×145	SLP1DF02V3H35	2.6
1 1/2″	40	30	0.5	16	16	13	80	D	22	13	F	131×96×145	SLP1DF02N3J40	2.5
	40	30	0.5	16	16		130	D	22	13	F	131×96×145	SLP1DF02E3J40	2.5
	40	30	0.5	16	16	13	120	D	22	13	F	131×96×145	SLP1DF02V3J40	2.5
2″	40	30	0.5	16	16	13	80	D	22	13	F	136×96×152	SLP1DF02N3K40	2.7
	40	30	0.5	16	16		130	D	22	13	F	136×96×152	SLP1DF02E3K40	2.7
	40	30	0.5	16	16	13	120	D	22	13	F	136×96×152	SLP1DF02V3K40	2.7
	50	48	0.5	16	16	13	80	D	22	13	F	165×120×162	SLP1DF02N3K50	4.4
	50	48	0.5	16	16		130	D	22	13	F	165×120×162	SLP1DF02E3K50	4.4
	50	48	0.5	16	16	13	120	D	22	13	F	165×120×162	SLP1DF02V3K50	4.4

SLP 2/2-way large diameter pilot operated solenoid valve · normally closed

Valve Selection List (Flange Connection)

Orifice mm	CV Factor	Operating pressure differential (kgf/cm²) Min.	Max. Air Gas AC	Max. Air Gas DC	Max. Water Hot water Liquids AC	Max. Water Hot water Liquids DC	Max. Light oil AC	Max. Light oil DC	Max. Fluids Temp.	Coil F class Type	Power consumption VA AC 220 V	Power consumption W DC 24 V	Model Code Follows Voltage are 220VAC 50/60HZ	Weight (KG)
25	12	0.5	16	16	16	16	13	13	80	D	22	13	SLP1DF02N3F25	2.7
25	12	0.5	16	16	16	16			120	D	22	13	SLP1DF02E3F25	2.7
25	12	0.5	16	16	16	16	13	13	120	D	22	13	SLP1DF02V3F25	2.7
35	22	0.5	16	16	16	16	13	13	80	D	22	13	SLP1DF02N3F35	5
35	22	0.5	16	16	16	16			120	D	22	13	SLP1DF02E3F35	5
35	22	0.5	16	16	16	16	13	13	120	D	22	13	SLP1DF02V3F35	5
40	30	0.5	16	16	16	16	13	13	80	D	22	13	SLP1DF02N3F40	5.3
40	30	0.5	16	16	16	16			120	D	22	13	SLP1DF02E3F40	5.3
40	30	0.5	16	16	16	16	13	13	120	D	22	13	SLP1DF02V3F40	5.3
50	48	0.5	16	16	16	16	13	13	80	D	22	13	SLP1DF02N3F50	7.9
50	48	0.5	16	16	16	16			120	D	22	13	SLP1DF02E3F50	7.9
50	48	0.5	16	16	16	16	13	13	120	D	22	13	SLP1DF02V3F50	7.9
65	80	1	12	10	12	10	8	6	80	D	33	20	SLP1DF02N4F65	13.5
65	80	1	12	10	12	10			120	D	33	20	SLP1DF02E4F65	13.5
65	80	1	12	10	12	10	8	6	120	D	33	20	SLP1DF02V4F65	13.5
80	100	1	12	10	12	10	8	6	80	D	33	20	SLP1DF02N4F80	15.6
80	100	1	12	10	12	10			120	D	33	20	SLP1DF02E4F80	15.6
80	100	1	12	10	12	10	8	6	120	D	33	20	SLP1DF02V4F80	15.6
100	145	1	12	10	12	10	8	6	80	D	33	20	SLP1DF02N4F100	22
100	145	1	12	10	12	10			120	D	33	20	SLP1DF02E4F100	22
100	145	1	12	10	12	10	8	6	120	D	33	20	SLP1DF02V4F100	22

External Dimensions Chart

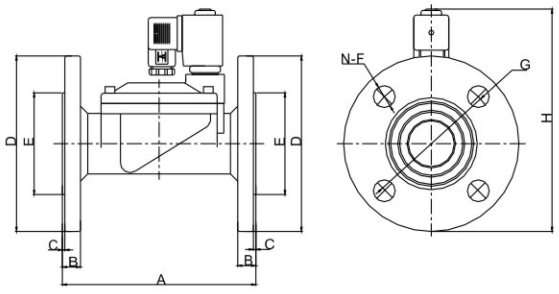



	A	B	C	ΦD	ΦE	N-ΦF	ΦG	H
DN25	134	13	2	110	58	4-14	85	160
DN32	160	15	2	135	74	4-18	100	175
DN40	160	15	2	145	84	4-18	110	180
DN50	200	16	2	160	88	4-18	125	207
DN65	250	19	3	185	118	4-18	145	250
DN80	270	19	3	202	134	4-18	160	262
DN100	340	21	3	220	162	8-18	180	287

SLP 2/2-way large diameter pilot operated solenoid valve · normally closed

Components Chart

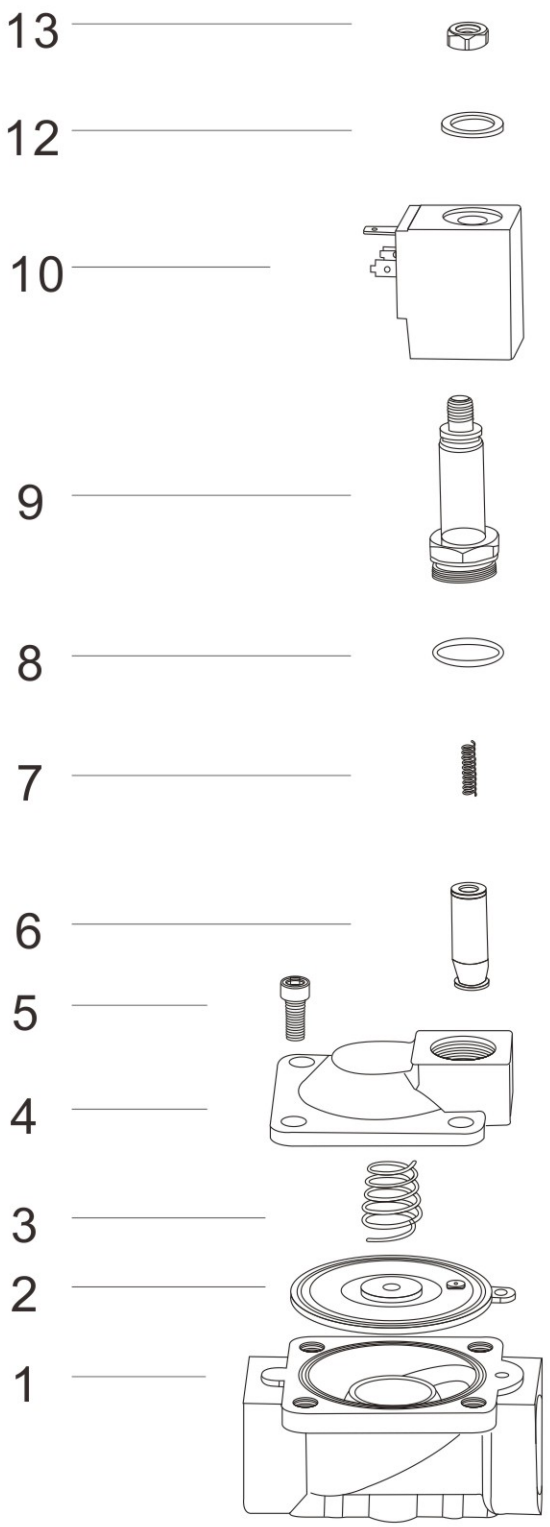

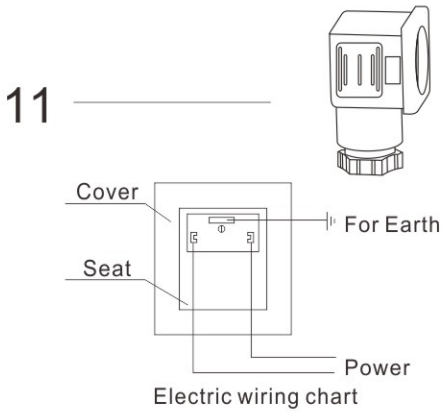

Electric wiring chart

Code	Components
01	Valve Body
02	Diaphragm
03	Diaphragm Spring
04	Valve Cover
05	Bolts
06	Plunger Assembly
07	Plunger Spring
08	O Ring $\phi 18 \times 1.5$
09	Plunger Tube Assembly
10	Coil
11	Plug
12	Gasket
13	Locknut

SLP plastic series 2/2-way pilot operated solenoid valve · normally closed

1: 2-Way normally closed solenoid valve, Closed when de-energized, open when energized.

2: Body material: Nylon

3: Max. Allowable pressure 13kgf/cm^2; Ambient Temp. 0℃~65℃

4: Serialized products, small in size, large flow rate, widely use

5: Flow as the arrow, mounts in any position; Best position is Solenoid vertical and upright direction.

6: Voltage: 220VAC/230VAC/240VAC/110VAC/24VAC 50/60HZ 24VDC/12VDC;
Voltage Tolerance: +10% to -10% applicable voltage

7: This series valves are offered NBR、VITON、EPDM etc
for Seals and diaphragm to provide on-off control of various fluids.

8: Coil can fix SM Coil. AC 220V/AC110V/AC24V/DC24V





Valve Selection List

Pipe Conn -ection	Orifice mm	CV Factor	Min.	Operating pressure differential (kgf/cm^2) Max.			Max. Fluids Temp.	Coil Type	Power consumption		Coil Class	External Dimensions Length x Width x Height A x B x H	Model Code Follows Voltage Are 220VAC 50/60HZ	Weight (KG)
				Air Gas	Water Hot water Liquids	Light oil ≤ 20CST			VA 220 V	W 24 V				
3/8″	13	4.5	0.5	10	10	6	80	D	22	13	F	76×52×112	SLP1DF02N7C13	0.38
	13	4.5	0.5	10	10		80	D	22	13	F	76×52×112	SLP1DF02E7C13	0.38
	13	4.5	0.5	10	10	6	80	D	22	13	F	76×52×112	SLP1DF02V7C13	0.38
1/2″	13	4.5	0.5	10	10	6	80	D	22	13	F	76×52×112	SLP1DF02N7D13	0.37
	13	4.5	0.5	10	10		80	D	22	13	F	76×52×112	SLP1DF02E7D13	0.37
	13	4.5	0.5	10	10	6	80	D	22	13	F	76×52×112	SLP1DF02V7D13	0.37
3/4″	20	7.6	0.5	10	10	6	80	D	22	13	F	90×71×116	SLP1DF02N7E20	0.43
	20	7.6	0.5	10	10		80	D	22	13	F	90×71×116	SLP1DF02E7E20	0.43
	20	7.6	0.5	10	10	6	80	D	22	13	F	90×71×116	SLP1DF02V7E20	0.43
1″	25	12	0.5	10	10	6	80	D	22	13	F	111×91×123	SLP1DF02N7G25	0.49
	25	12	0.5	10	10		80	D	22	13	F	111×91×123	SLP1DF02E7G25	0.49
	25	12	0.5	10	10	6	80	D	22	13	F	111×91×123	SLP1DF02V7G25	0.49
1 1/4″	35	22	0.5	10	10	6	80	D	22	13	F	158×115×141	SLP1DF02N7H35	0.85
	35	22	0.5	10	10		80	D	22	13	F	158×115×141	SLP1DF02E7H35	0.85
	35	22	0.5	10	10	6	80	D	22	13	F	158×115×141	SLP1DF02V7H35	0.85
1 1/2″	40	30	0.5	10	10	6	80	D	22	13	F	158×115×141	SLP1DF02N7J40	0.78
	40	30	0.5	10	10		80	D	22	13	F	158×115×141	SLP1DF02E7J40	0.78
	40	30	0.5	10	10	6	80	D	22	13	F	158×115×141	SLP1DF02V7J40	0.78

SLP 2/2-way large diameter pilot operated solenoid valve · normally open

1: 2-Way normally open solenoid valve;
Open when de-energized, closed when energized.

2: Body material: brass

3: Max. Allowable pressure 16kgf/cm^2; Ambient Temp. 0℃~65℃

4: Serialized products, small in size, large flow rate, widely use.

5: Flow as the arrow, mounts in any position; Best position is
Solenoid vertical and upright direction.

6: Voltage: 220VAC/230VAC/240VAC/110VAC/24VAC 50/60HZ 24VDC/12VDC;
Voltage Tolerance: +10% to -10% applicable voltage.

7: This series valves are offered NBR, VITON, EPDM etc for
Seals and diaphragm to provide on-off control of various fluids.



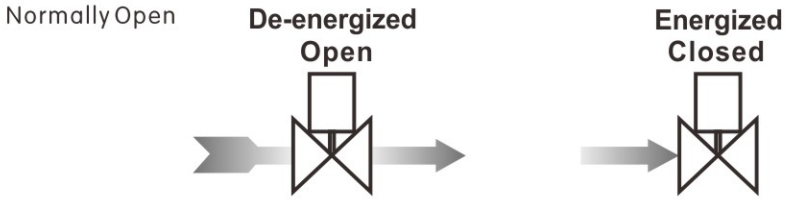

Construction, External Dimensions Chart

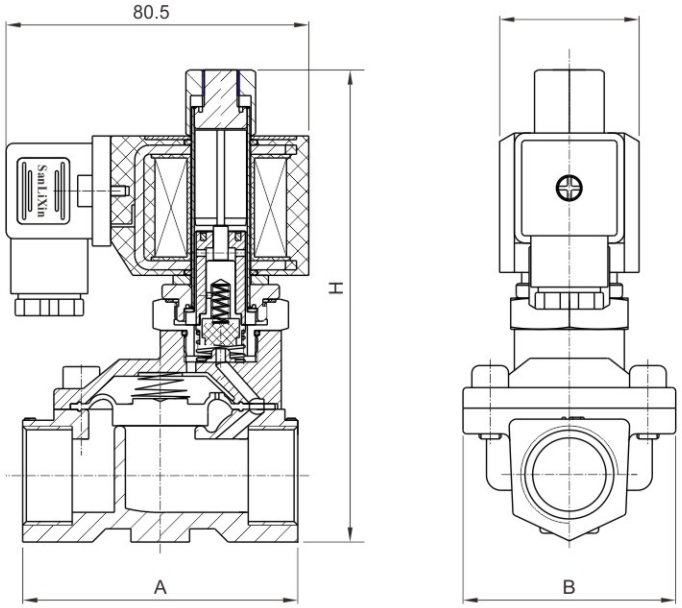

SLP 2/2-way large diameter pilot operated solenoid valve · normally open

Valve Selection List

Pipe Conn -ection	Orifice mm	CV Factor	Operating pressure differential (kgf/cm²)				Max. Fluids Temp.	Coil Type	Power consumption		Coil Class	External Dimensions Length x Width x Height A x B x H	Model Code Follows Voltage are 220VAC 50/60HZ	Weight (KG)
			Min.	Max.					VA	W				
				Air Gas	Water Hot water Liquids	Light oil ≤ 20CST			AC 220 V	DC 24 V				
3/8″	13	4.5	0.5	13	13	8	80	D	20	20	F	66×48×124	SLP2DF02N1C13	0.9
	13	4.5	0.5	13	13		120	D	20	20	F	66×48×124	SLP2DF02E1C13	0.9
	13	4.5	0.5	13	13	8	120	D	20	20	F	66×48×124	SLP2DF02V1C13	0.9
1/2″	13	4.5	0.5	13	13	8	80	D	20	20	F	66×48×124	SLP2DF02N1D13	0.9
	13	4.5	0.5	13	13		120	D	20	20	F	66×48×124	SLP2DF02E1D13	0.9
	13	4.5	0.5	13	13	8	120	D	20	20	F	66×48×124	SLP2DF02V1D13	0.9
3/4″	20	7.6	0.5	13	13	8	80	D	20	20	F	75×58×130	SLP2DF02N1E20	1.1
	20	7.6	0.5	13	13		120	D	20	20	F	75×58×130	SLP2DF02E1E20	1.1
	20	7.6	0.5	13	13	8	120	D	20	20	F	75×58×130	SLP2DF02V1E20	1.1
1″	20	7.6	0.5	13	13	8	80	D	20	20	F	81×58×136	SLP2DF02N1G20	1.3
	20	7.6	0.5	13	13	8	120	D	20	20	F	81×58×136	SLP2DF02E1G20	1.3
	20	7.6	0.5	13	13	8	120	D	20	20	F	81×58×136	SLP2DF02V1G20	1.3
	25	12	0.5	13	13	8	80	D	20	20	F	96×70×143	SLP2DF02N1G25	1.6
	25	12	0.5	13	13		120	D	20	20	F	96×70×143	SLP2DF02E1G25	1.6
	25	12	0.5	13	13	8	120	D	20	20	F	96×70×143	SLP2DF02V1G25	1.6
1-1/4″	32	22	0.5	8	8	8	80	D	20	20	F	125×96 ×152	SLP2DF02N1H32	2.7
	32	22	0.5	8	8		120	D	20	20	F	125×96 ×152	SLP2DF02E1H32	2.7
	32	22	0.5	8	8	8	120	D	20	20	F	125×96 ×152	SLP2DF02V1H32	2.7
	35	22	0.5	8	8	8	80	D	20	20	F	131 ×96×162	SLP2DF02N1H35	3
	35	22	0.5	8	8		120	D	20	20	F	131 ×96×162	SLP2DF02E1H35	3
	35	22	0.5	8	8	8	120	D	20	20	F	131 ×96×162	SLP2DF02V1H35	3
1-1/2″	40	30	0.5	8	8	8	80	D	20	20	F	131 ×96×162	SLP2DF02N1J40	2.8
	40	30	0.5	8	8		120	D	20	20	F	131 ×96×162	SLP2DF02E1J40	2.8
	40	30	0.5	8	8	8	120	D	20	20	F	131 ×96×162	SLP2DF02V1J40	2.8
2″	40	30	0.5	8	8	8	80	D	20	20	F	136 ×96×169	SLP2DF02N1K40	3.2
	40	30	0.5	8	8	8	120	D	20	20	F	136 ×96×169	SLP2DF02E1K40	3.2
	40	30	0.5	8	8	8	120	D	20	20	F	136 ×96×169	SLP2DF02V1K40	3.2
	50	48	0.5	8	8	8	80	D	20	20	F	165 ×120×174	SLP2DF02N1K50	4.2
	50	48	0.5	8	8		120	D	20	20	F	165 ×120×174	SLP2DF02E1K50	4.2
	50	48	0.5	8	8	8	120	D	20	20	F	165 ×120×174	SLP2DF02V1K50	4.2

SLP 2/2-way large diameter pilot operated solenoid valve · normally open

1: 2-Way normally open solenoid valve; Open when de-energized, closed when energized.
2: Body material: 316 stainless steel
3: Max. Allowable pressure 16kgf/cm^2; Ambient Temp. 0℃~65℃
4: Serialized products, small in size, large flow rate, widely use.
5: Flow as the arrow, mounts in any position; Best position is Solenoid vertical and upright direction.
6: Voltage: 220VAC/230VAC/240VAC/110VAC/24VAC 50/60HZ 24VDC/12VDC; Voltage Tolerance: +10% to -10% applicable voltage.
7: This series valves are offered NBR、VITON、EPDM etc for Seals and diaphragm to provide on-off control of various fluids.



Normally Open



Construction, External Dimensions Chart

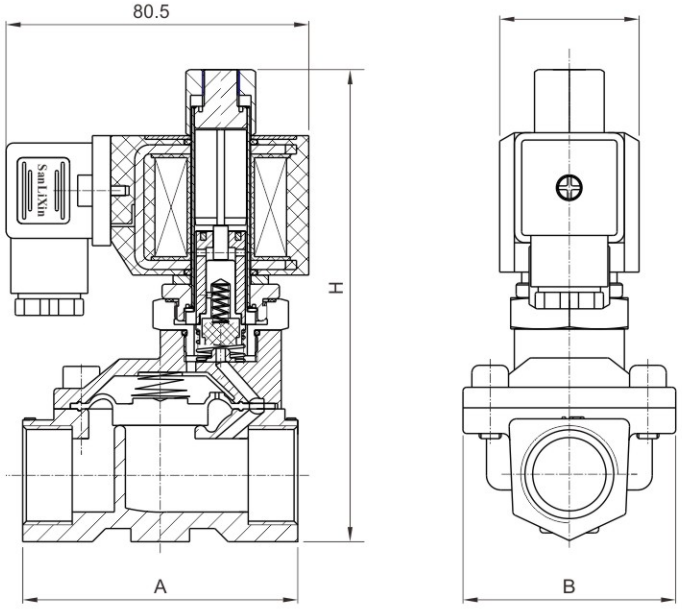

SLP 2/2-way large diameter pilot operated solenoid valve · normally open

Valve Selection List (Female connection)

Pipe Conn -ection	Orifice mm	CV Factor	Operating pressure differential (kgf/cm²)				Max. Fluids Temp.	Coil Type	Power consumption		Coil Class	External Dimensions Length x Width x Height A x B x H	Model Code Follows Voltage are 220VAC 50/60HZ	Weight (KG)
			Min.	Max.					VA	W				
				Air Gas	Water Hot water Liquids	Light oil ⩽ 20CST			AC 220 V	DC 24 V				
3/8″	13	4.5	0.5	13	13	8	80	D	20	20	F	66×48×124	SLP2DF02N3C13	0.95
	13	4.5	0.5	13	13		120	D	20	20	F	66×48×124	SLP2DF02E3C13	0.95
	13	4.5	0.5	13	13	8	120	D	20	20	F	66×48×124	SLP2DF02V3C13	0.95
1/2″	13	4.5	0.5	13	13	8	80	D	20	20	F	66×48×124	SLP2DF02N3D13	0.9
	13	4.5	0.5	13	13		120	D	20	20	F	66×48×124	SLP2DF02E3D13	0.9
	13	4.5	0.5	13	13	8	120	D	20	20	F	66×48×124	SLP2DF02V3D13	0.9
3/4″	20	7.6	0.5	13	13	8	80	D	20	20	F	75×58×130	SLP2DF02N3E20	1.1
	20	7.6	0.5	13	13		120	D	20	20	F	75×58×130	SLP2DF02E3E20	1.1
	20	7.6	0.5	13	13	8	120	D	20	20	F	75×58×130	SLP2DF02V3E20	1.1
1″	20	7.6	0.5	13	13	8	80	D	20	20	F	81×58×136	SLP2DF02N3G20	1.2
	20	7.6	0.5	13	13	8	120	D	20	20	F	81×58×136	SLP2DF02E3G20	1.2
	20	7.6	0.5	13	13	8	120	D	20	20	F	81×58×136	SLP2DF02V3G20	1.2
	25	12	0.5	13	13	8	80	D	20	20	F	96×70×143	SLP2DF02N3G25	1.5
	25	12	0.5	13	13		120	D	20	20	F	96×70×143	SLP2DF02E3G25	1.5
	25	12	0.5	13	13	8	120	D	20	20	F	96×70×143	SLP2DF02V3G25	1.5
1 1/4″	32	22	0.5	8	8	8	80	D	20	20	F	125×96×152	SLP2DF02N3H32	2.1
	32	22	0.5	8	8		120	D	20	20	F	125×96×152	SLP2DF02E3H32	2.1
	32	22	0.5	8	8	8	120	D	20	20	F	125×96×152	SLP2DF02V3H32	2.1
	35	22	0.5	8	8	8	80	D	20	20	F	131×96×162	SLP2DF02N3H35	2.8
	35	22	0.5	8	8		120	D	20	20	F	131×96×162	SLP2DF02E3H35	2.8
	35	22	0.5	8	8	8	120	D	20	20	F	131×96×162	SLP2DF02V3H35	2.8
1 1/2″	40	30	0.5	8	8	8	80	D	20	20	F	131×96×162	SLP2DF02N3J40	2.7
	40	30	0.5	8	8		120	D	20	20	F	131×96×162	SLP2DF02E3J40	2.7
	40	30	0.5	8	8	8	120	D	20	20	F	131×96×162	SLP2DF02V3J40	2.7
2″	40	30	0.5	8	8	8	80	D	20	20	F	136×96×169	SLP2DF02N3K40	2.9
	40	30	0.5	8	8	8	120	D	20	20	F	136×96×169	SLP2DF02E3K40	2.9
	40	30	0.5	8	8	8	120	D	20	20	F	136×96×169	SLP2DF02V3K40	2.9
	50	48	0.5	8	8	8	80	D	20	20	F	165×120×174	SLP2DF02N3K50	4.6
	50	48	0.5	8	8		120	D	20	20	F	165×120×174	SLP2DF02E3K50	4.6
	50	48	0.5	8	8	8	120	D	20	20	F	165×120×174	SLP2DF02V3K50	4.6

SLP 2/2-way large diameter pilot operated solenoid valve · normally open

Valve Selection List (Flange connection)

Orifice mm	CV Factor	Operating pressure differential (kgf/cm²) Min.	Max. Air Gas AC	Max. Air Gas DC	Max. Water Hot water Liquids AC	Max. Water Hot water Liquids DC	Max. Light oil AC	Max. Light oil DC	Max. Fluids Temp.	Coil F Lass Type	Power consumption VA AC 220 V	Power consumption W DC 24 V	Model Code Follows Voltage are 220VAC 50/60HZ	Weight (KG)
25	12	0.5	13	13	13	13	8	8	80	D	20	20	SLP2DF02N3F25	2.9
25	12	0.5	13	13	13	13			120	D	20	20	SLP2DF02E3F25	2.9
25	12	0.5	13	13	13	13	8	8	120	D	20	20	SLP2DF02V3F25	2.9
35	22	0.5	8	8	8	8	8	8	80	D	20	20	SLP2DF02N3F35	5.2
35	22	0.5	8	8	8	8			120	D	20	20	SLP2DF02E3F35	5.2
35	22	0.5	8	8	8	8	8	8	120	D	20	20	SLP2DF02V3F35	5.2
40	30	0.5	8	8	8	8	8	8	80	D	20	20	SLP2DF02N3F40	5.5
40	30	0.5	8	8	8	8			120	D	20	20	SLP2DF02E3F40	5.5
40	30	0.5	8	8	8	8	8	8	120	D	20	20	SLP2DF02V3F40	5.5
50	48	0.5	8	8	8	8	8	8	80	D	20	20	SLP2DF02N3F50	8.1
50	48	0.5	8	8	8	8			120	D	20	20	SLP2DF02E3F50	8.1
50	48	0.5	8	8	8	8	8	8	120	D	20	20	SLP2DF02V3F50	8.1
65	52	1	8	8	8	8	6	6	80	D	33	20	SLP2DF02N4F65	13.7
65	52	1	8	8	8	8			120	D	33	20	SLP2DF02E4F65	13.7
65	52	1	8	8	8	8	6	6	120	D	33	20	SLP2DF02V4F65	13.7
80	80	1	8	8	8	8	6	6	80	D	33	20	SLP2DF02N4F80	15.8
80	80	1	8	8	8	8			120	D	33	20	SLP2DF02E4F80	15.8
80	80	1	8	8	8	8	6	6	120	D	33	20	SLP2DF02V4F80	15.8
100	145	1	8	8	8	8	6	6	80	D	33	20	SLP2DF02N4F100	22.2
100	145	1	8	8	8	8			120	D	33	20	SLP2DF02E4F100	22.2
100	145	1	8	8	8	8	6	6	120	D	33	20	SLP2DF02V4F100	22.2

SLP 2/2-way large diameter pilot operated solenoid valve · normally open

Construction, External Dimensions Chart

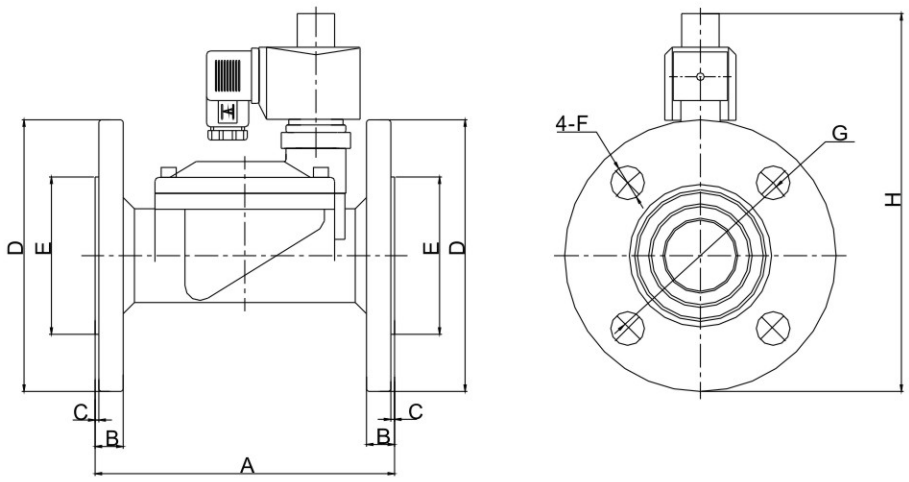

	A	B	C	ΦD	ΦE	ΦF	ΦG	H
SLP-25BHF	134	13	2	110	58	4-14	85	174
SLP-32BHF	160	15	2	135	74	4-18	100	192
SLP-40BHF	160	15	2	145	84	4-18	110	197
SLP-50BHF	200	16	2	160	88	4-18	125	224
SLP-65BHF	250	19	3	185	118	4-18	145	262
SLP-80BHF	270	19	3	200	134	4-18	160	274
SLP-100BHF	340	21	3	220	162	8-18	182	299

SLP plastic series 2/2-way pilot operated solenoid valve · normally open

1: 2-Way normally open solenoid valve; Open when de-energized, closed when energized.
2: Body material: Nylon
3: Max. Allowable pressure 13kgf/cm^2; Ambient Temp. 0℃~65℃
4: Serialized products, small in size, large flow rate, widely use.
5: Flow as the arrow, mounts in any position; Best position is Solenoid vertical and upright direction.
6: Voltage: 220VAC/230VAC/240VAC/110VAC/24VAC 50/60HZ 24VDC/12VDC; Voltage Tolerance: +10% to -10% applicable voltage.
7: This series valves are offered NBR、VITON、EPDM etc for Seals and diaphragm to provide on-off control of various fluids.



Valve Selection List (Female connection)

Pipe Conn -ection	Orifice mm	CV Factor	Min.	Operating pressure differential (kgf/cm^2) Max.			Max. Fluids Temp.	Coil Type	Power consumption		Coil Class	External Dimensions Length x Width x Height A x B x H	Model Code Follows Voltage are 220VAC 50/60HZ	Weight (KG)
				Air Gas	Water Hot water Liquids	Light oil ≤ 20CST			VA AC 220 V	W DC 24 V				
3/8″	13	4.5	0.5	8	8	5	80	D	20	20	F	76×52×129	SLP2DF02N7C13	0.53
	13	4.5	0.5	8	8		80	D	20	20	F	76×52×129	SLP2DF02E7C13	0.53
	13	4.5	0.5	8	8	5	80	D	20	20	F	76×52×129	SLP2DF02V7C13	0.53
1/2″	13	4.5	0.5	8	8	5	80	D	20	20	F	76×52×129	SLP2DF02N7D13	0.52
	13	4.5	0.5	8	8		80	D	20	20	F	76×52×129	SLP2DF02E7D13	0.52
	13	4.5	0.5	8	8	5	80	D	20	20	F	76×52×129	SLP2DF02V7D13	0.52
3/4″	20	7.6	0.5	8	8	5	80	D	20	20	F	90×71×133	SLP2DF02N7E20	0.58
	20	7.6	0.5	8	8		80	D	20	20	F	90×71×133	SLP2DF02E7E20	0.58
	20	7.6	0.5	8	8	5	80	D	20	20	F	90×71×133	SLP2DF02V7E20	0.58
1″	25	12	0.5	8	8	5	80	D	20	20	F	111×91×141	SLP2DF02N7G25	0.65
	25	12	0.5	8	8		80	D	20	20	F	111×91×141	SLP2DF02E7G25	0.65
	25	12	0.5	8	8	5	80	D	20	20	F	111×91×141	SLP2DF02V7G25	0.65
1 1/4″	35	22	0.5	8	8	5	80	D	20	20	F	158×115×158	SLP2DF02N7H35	1.0
	35	22	0.5	8	8		80	D	20	20	F	158×115×158	SLP2DF02E7H35	1.0
	35	22	0.5	8	8	5	80	D	20	20	F	158×115×158	SLP2DF02V7H35	1.0
1 1/2″	40	30	0.5	8	8	5	80	D	20	20	F	158×115×158	SLP2DF02N7J40	0.9
	40	30	0.5	8	8		80	D	20	20	F	158×115×158	SLP2DF02E7J40	0.9
	40	30	0.5	8	8	5	80	D	20	20	F	158×115×158	SLP2DF02V7J40	0.9

SLP series coil parameters tables

SLP Series Coils Characteristics List

Coils Model Code	Voltage	Power consumption				Suitable Valve Model
		50HZ VA		60HZ VA		DC	
		Inrush	Holding	Inrush	Holding	W	
D04-3101 N04-3101	AC220V	55	22	55	18		SLP Normally Closed Series SLP micro Normally Open Series ϕ1.5~3mm
D04-3102 N04-3102	AC110V	55	22	55	18		
D04-3104 N04-3104	AC24V	45	18	45	15		
D04-3106 N04-3106	DC24V					13	
D04-3107 N04-3107	DC12V					13	
D01-4101 N01-4101	AC220V	82	20	60	20		SLP Normally Open Series
D01-4102 N01-4102	AC110V	82	28	82	28		
D01-4106 N01-4106	DC24V					20	
D03-5107 N03-5107	DC12V					28.5	
D01-4101	AC220V	82	33	82	28		ϕ65~100mm SLP Normally Closed
D01-4106	DC24V					20	

SM Coil parameters tables

Coils Model Code	Voltage	Power consumption		Electricity		The orifice for suitable Valve Model. (mm)	
		Inrush	holding	Inrush	holding	Normally closed	Normally open
SM-3101	AC220V	78VA	4.5VA	350mA	20mA	ϕ3.0-ϕ50	
SM-3102	AC110V	72VA	5.0VA	660mA	45mA		
SM-3106	DC24V	80W	7.2W	3300mA	310mA		
SM-3104	AC24V	52VA	6.3VA	2600mA	320mA		
SM-3107	DC12V	35W	8.5W	2900mA	700mA		
SM-4101	AC220V	130VA	6.0VA	590mA	28mA	ϕ65-ϕ100	
SM-4102	AC110V	95VA	8.0VA	900mA	75mA		
SM-4106	DC24V	98W	8.8W	4050mA	365mA		
SM-4104	AC24V	66VA	6.8VA	3400mA	360mA		
SM-4107	DC12V	45W	4.5W	3750mA	380mA		

SLA 2/2-way pilot operated piston solenoid valve · normally closed

Solenoid Valves Numbering System for Order

Position description	1	2	3	4	5	6	7	8	9	10
	Valve Series	Mode of Operation	Coil Type	Coil Class	Voltage	Seal Material	Body Material	Pipe Size	Orifice (Φ mm)	Options
E.G.	SLA	1	W	H	01	T	1	D	15	□
	SLA Series	1: Normally Closed 2: Normally Open	W: Metallic Housing, Lead wires A: Metallic Housing, DIN Standard D: DIN Standard Connections, Fully Encapsulated N: Lead Wires, Water-tight, Fully Encapsulated U= Under water S: NASS Coil X: Explosion-proof M: SM Coil	H: H Class F:F Class H:H Class F:F Class	02=220VAC 230VAC 50/60HZ 01=110VAC 120VAC 50/60HZ 05=24VAC 13=DC24V 12=DC12V Contact the company for other voltage	T: Teflon +Fiberglass (for orifice under ϕ5.5mm only) V: VITON E: EPDM N: NBR	Forged Brass 4= SS304 (Normal regualtions) 3= SS316 4= SS304	A: 1/8" B:1/4" C: 3/8" D: 1/2" E: 3/4" G: 1" H: 1 1/4" J: 1 1/2" K: 2" F: Flange Connection	C3=2.5 C6=4.5 C6=4.5 15=15.0 C6=4.5 15=15.0 20=20.0 25=25.0 35=35. 50=50. 25=25.0 35=35.0 40=35.0 50=50.0 65=65.0 80=80.0 100=100.0	L: Neon Lamp N: NPT Connection T: Timers M: Manual Override

SLA 2/2-way pilot operated piston solenoid valve · normally closed

1: 2-Way normally closed solenoid valve; Closed when de-energized, open when energized.

2: Body material: brass

3: Max. Allowable pressure 40kgf/cm^2;
Ambient Temp. 0℃~65℃ （F CLASS），0℃~80℃ （H CLASS）

4: Serialized products, small in size, large flow rate, widely use.

5: Flow as the arrow, mounts in any position; Best position is Solenoid vertical and upright direction.

6: Voltage: 220VAC/230VAC/240VAC/110VAC/24VAC
50/60HZ 24VDC/12VDC;
Voltage Tolerance: ＋10% to -10%applicable voltage.

7: Coil can fix Germany NASS Coil,Standard storage:
220VAC/230VAC/240VAC 50/60HZ 24V

8: This series valves are offered Teflon for Seals to provide on-off control of various fluids.



Normally Closed



Construction, External Dimensions Chart

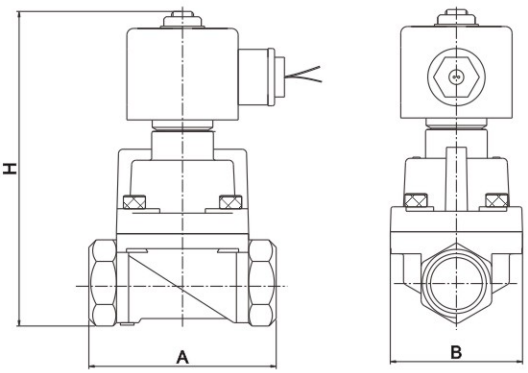

Flow Chart

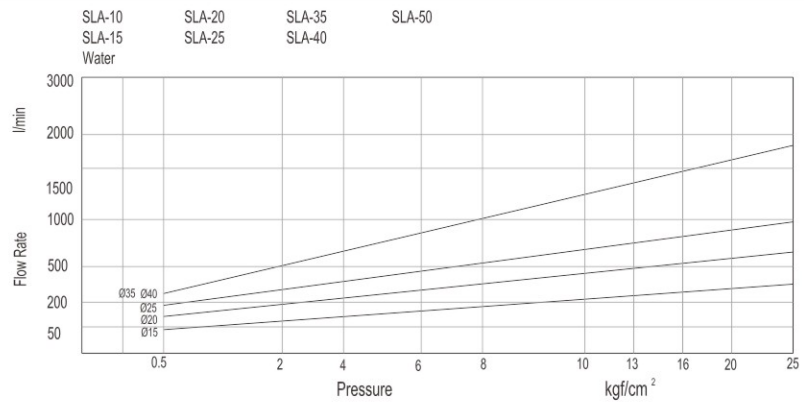

SLA 2/2-way pilot operated piston solenoid valve · normally closed

Valve Selection List

Pipe Conn -ection	Orifice mm	CV Factor	Operating pressure differential (kgf/cm^2) Min.	Air Gas AC	Air Gas DC	Max. Water Hot water Liquids AC	Max. Water Hot water Liquids DC	Light oil AC	Light oil DC	Steam AC/DC	Max. Fluids Temp.	Coil Type	Power consumption VA AC 220 V	Power consumption W DC 24 V	Coil Class	External Dimensions Length x Width x Height A x B x H	Model Code Follows Voltage are 220VAC 50/60HZ	Weight (KG)
1/8″	2.5	0.23	0	13	13	13	13	7	7	10	180	D	22	13	H	48×25×85.5	SLA1SH02T1AC3	0.45
	2.5	0.23	0	13	13	13	13	7	7		110	D	22	13	F	48×25×85.5	SLA1DF02V1AC3	0.45
	2.5	0.23	0	13	13	13	13	7	7		135	D	22	13	H	48×25×85.5	SLA1DF02E1AC3	0.45
	2.5	0.23	0	13	13	13	13	7	7		80	D	22	13	F	48×25×85.5	SLA1DF02N1AC3	0.45
	4.5	0.6	0	7	4	7	4	4	4	7	165	D	22	13	H	58×25×85.5	SLA1SH02T1AC6	0.55
	4.5	0.6	0	7	4	7	4	4	4		110	D	22	13	F	58×25×85.5	SLA1DF02V1AC6	0.55
	4.5	0.6	0	7	4	7	4	4	4		135	D	22	13	H	58×25×85.5	SLA1DF02E1AC6	0.55
	4.5	0.6	0	7	4	7	4	4	4		80	D	22	13	F	58×25×85.5	SLA1DF02N1AC6	0.55
1/4″	2.5	0.23	0	13	13	13	13	7	7	10	180	D	22	13	H	48×25×85.5	SLA1SH02T1BC3	0.4
	2.5	0.23	0	13	13	13	13	7	7		110	D	22	13	F	48×25×85.5	SLA1DF02V1BC3	0.4
	2.5	0.23	0	13	13	13	13	7	7		135	D	22	13	H	48×25×85.5	SLA1DF02E1BC3	0.4
	2.5	0.23	0	13	13	13	13	7	7		80	D	22	13	F	48×25×85.5	SLA1DF02N1BC3	0.4
	4.5	0.6	0	7	4	7	4	4	4	7	165	D	22	13	H	58×25×85.5	SLA1SH02T1BC6	0.5
	4.5	0.6	0	7	4	7	4	4	4		110	D	22	13	F	58×25×85.5	SLA1DF02V1BC6	0.5
	4.5	0.6	0	7	4	7	4	4	4		135	D	22	13	H	58×25×85.5	SLA1DF02E1BC6	0.5
	4.5	0.6	0	7	4	7	4	4	4		80	D	22	13	F	58×25×85.5	SLA1DF02N1BC6	0.5
3/8″	15	4.5	0.5	25	20	25	20	20	20		110	D	20	20	F	75×52×130	SLA1DF02V1C15	1.25
	15	4.5	0.5	10	10	10	10	10	10	10	185	W	30	25	H	75×52×130	SLA1WH02T1C15	1.25
1/2″	15	4.5	0.5	25	20	25	20	20	20		110	D	20	20	F	75×52×130	SLA1DF02V1D15	1.2
	15	4.5	0.5	10	10	10	10	10	10	10	185	W	30	25	H	75×52×130	SLA1WH02T1D15	1.2
3/4″	20	9.0	0.5	25	20	25	20	20	20		110	D	20	20	F	85×60×141	SLA1DF02V1E20	1.5
	20	9.0	0.5	10	10	10	10	10	10	10	185	W	30	25	H	85×60×141	SLA1WH02T1E20	1.5
1″	25	13	0.5	25	20	25	20	20	20		110	D	20	20	F	100×70×148	SLA1DF02V1G25	1.9
	25	13	0.5	10	10	10	10	10	10	10	185	W	30	25	H	100×70×148	SLA1WH02T1G25	1.9
1 1/4″	35	26	0.5	25	20	25	20	20	20		110	D	20	20	F	120×90×168	SLA1DF02V1H35	3.6
	35	26	0.5	10	10	10	10	10	10	10	185	W	30	25	H	120×90×168	SLA1WH02T1H35	3.6
1 1/2″	35	26	0.5	25	20	25	20	20	20		110	D	20	20	F	120×90×168	SLA1DF02V1J35	3.5
	35	26	0.5	10	10	10	10	10	10	10	185	W	30	25	H	120×90×168	SLA1WH02T1J35	3.5
2″	45	45	0.5	25	20	25	20	20	20		110	D	20	20	F	150×110×190	SLA1DF02V1K50	4.5
	45	45	0.5	10	10	10	10	10	10	10	185	W	30	25	H	150×110×190	SLA1WH02T1K50	4.5

SLA 2/2-way pilot operated piston solenoid valve · normally closed

1: 2-Way normally closed solenoid valve;
Closed when de-energized, open when energized.

2: Body material:304 stainless steel（standard）, 316 stainless steel（special made）

3: Max. Allowable pressure 40kgf/cm^2;
Ambient Temp. 0℃~65℃（F CLASS）, 0℃~80℃（H CLASS）

4: Serialized products, small in size, large flow rate, widely use.

5: Flow as the arrow, mounts in any position; Best position is
Solenoid vertical and upright direction.

6: Voltage: 220VAC/230VAC/240VAC/110VAC/24VAC 50/60HZ 24VDC/12VDC;
Voltage Tolerance: + 10% to -10%applicable voltage.

7: Coil can fix Germany NASS Coil,Standard storage: 220VAC/230VAC/240VAC 50/60HZ 24VDC

8: This series valves are offered Teflon for Seals to provide on-off control of various fluids.



Valve Selection List (Female Thread)

Pipe Conn -ection	Orifice mm	CV Factor	Operating pressure differential (kgf/cm^2) Min.	Max. Air Gas AC	Max. Air Gas DC	Max. Water Hot water Liquids AC	Max. Water Hot water Liquids DC	Max. Light oil AC	Max. Light oil DC	Max. Steam AC/DC	Max. Fluids Temp.	Coil Type	Power consumption VA AC 220 V	Power consumption W DC 24 V	Coil Class	External Dimensions Length x Width x Height A x B x H	Model Code Follows Voltage are 220VAC 50/60HZ	Weight KG
3/8″	15	4.5	0.5	25	20	25	20	20	20		110	D	20	20	F	75×52×130	SLA1DF02V4C15	1.25
	15	4.5	0.5	10	10	10	10	10	10	10	185	W	30	25	H	75×52×130	SLA1WH02T4C15	1.25
1/2″	15	4.5	0.5	25	20	25	20	20	20		110	D	20	20	F	75×52×130	SLA1DF02V4D15	1.2
	15	4.5	0.5	10	10	10	10	10	10	10	185	W	30	25	H	75×52×130	SLA1WH02T4D15	1.2
3/4″	20	9.0	0.5	25	20	25	20	20	20		110	D	20	20	F	85×60×141	SLA1DF02V4E20	1.5
	20	9.0	0.5	10	10	10	10	10	10	10	185	W	30	25	H	85×60×141	SLA1WH02T4E20	1.5
1″	25	13	0.5	25	20	25	20	20	20		110	D	20	20	F	100×70×148	SLA1DF02V4G25	1.9
	25	13	0.5	10	10	10	10	10	10	10	185	W	30	25	H	100×70×148	SLA1WH02T4G25	1.9
1 1/4″	35	26	0.5	25	20	25	20	20	20		110	D	20	20	F	120×90×168	SLA1DF02V4H35	3.6
	35	26	0.5	10	10	10	10	10	10	10	185	W	30	25	H	120×90×168	SLA1WH02T4H35	3.6
1 1/2″	35	26	0.5	25	20	25	20	20	20		110	D	20	20	F	120×90×168	SLA1DF02V4J35	3.5
	35	26	0.5	10	10	10	10	10	10	10	185	W	30	25	H	120×90×168	SLA1WH02T4J35	3.5
2"	45	45	0.5	25	20	25	20	20	20		110	D	20	20	F	150×110×190	SLA1DF02V4K50	4.2
	45	45	0.5	10	10	10	10	10	10	10	185	W	30	25	H	150×110×190	SLA1WH02T4K50	4.2

SLA 2/2-way pilot operated piston solenoid valve · normally closed

Valve Selection List (Flange Connection)

Orifice mm	CV Factor	Operating pressure differential (kgf/cm²) Min.	Max. Air Gas AC	Max. Air Gas DC	Max. Water Hot water Liquids AC	Max. Water Hot water Liquids DC	Max. Light oil AC	Max. Light oil DC	Max. Steam AC/DC	Max. Fluids Temp.	Coil Type	Coil Class	Power consumption VA AC 220 V	Power consumption W DC 24 V	Model Code Follows Voltage are 220VAC 50/60HZ	Weight (KG)
25	13	0.5	25	20	25	20	20	20		110	D	F	20	20	SLA1DF02T4F25	3.4
25	13	0.5	10	10	10	10	10	10	10	185	W	H	30	25	SLA1WH02T4F25	3.4
35	26	0.5	25	20	25	20	20	20		110	D	F	20	20	SLA1DF02T4F35	6
35	26	0.5	10	10	10	10	10	10	10	185	W	H	30	25	SLA1WH02T4F35	6
40	26	0.5	25	20	25	20	20	20		110	D	F	20	20	SLA1DF02T4F40	6.5
40	26	0.5	10	10	10	10	10	10	10	185	W	H	30	25	SLA1WH02T4F40	6.5
50	45	0.5	25	20	25	20	20	20		110	D	F	20	20	SLA1DF02T4F50	7.3
50	45	0.5	10	10	10	10	10	10	10	185	W	H	30	25	SLA1WH02T4F50	7.3

Construction, External Dimensions Chart

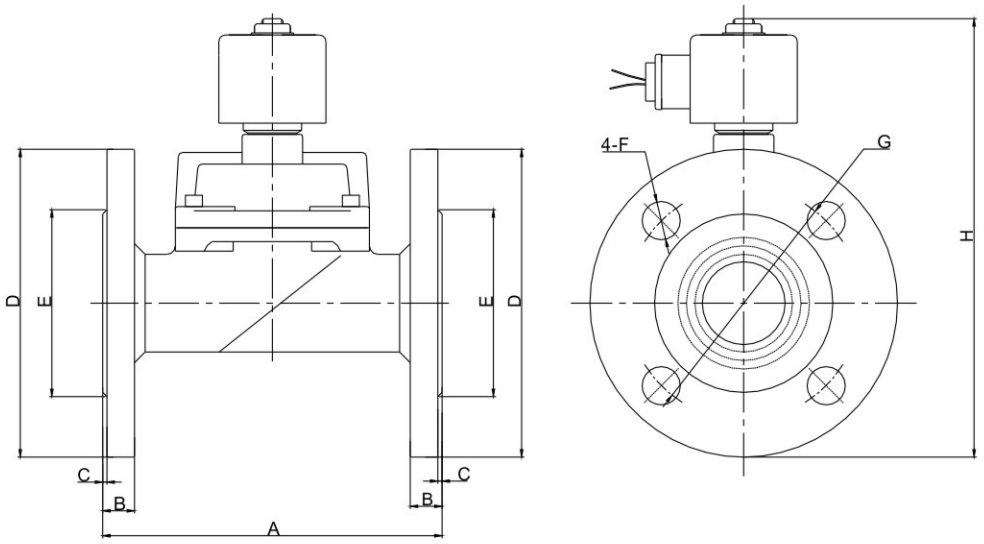

Model	A	B	C	ϕD	ϕE	ϕF	ϕG	H
DN25	134	13	2	110	58	4-14	85	185
DN32	160	15	2	135	76	4-18	100	200
DN40	160	15	2	145	84	4-18	110	205
DN50	200	20	2	165	102	4-18	125	255

SLA 2/2-way pilot operated piston solenoid valve · normally closed

Valve Selection List (Flange Connection)

Orifice mm	CV Factor	Operating pressure differential (kgf/cm²) Min.	Max. Air Gas AC	Max. Air Gas DC	Max. Water Hot water Liquids AC	Max. Water Hot water Liquids DC	Max. Light oil AC	Max. Light oil DC	Max. Steam AC/DC	Max. Fluids Temp.	Coil Type	Coil Class	Model Code Follows Voltage are 220VAC 50/60HZ	Weight (KG)
65	80	1	16	16	16	16	16	16		110	M	F	SLA1MF02T4F65	24
65	80	1	16	16	16	16	16	16	10	200	A	H	SLA1AH02T4F65	
80	100	1	16	16	16	16	16	16		110	M	F	SLA1MF02T4F80	33
80	100	1	16	16	16	16	16	16	10	200	A	H	SLA1AH02T4F80	
100	145	1	16	16	16	16	16	16		110	M	F	SLA1MF02T4F100	47
100	145	1	16	16	16	16	16	16	10	200	A	H	SLA1AH02T4F100	
150	290	1	25	20	25	20	20	20		110	D	F	SLA1DF02T4F150W	76
150	290	1	10	10	10	10	10	10	10	185	W	H	SLA1WH02T4F150W	

External Dimensions Chart

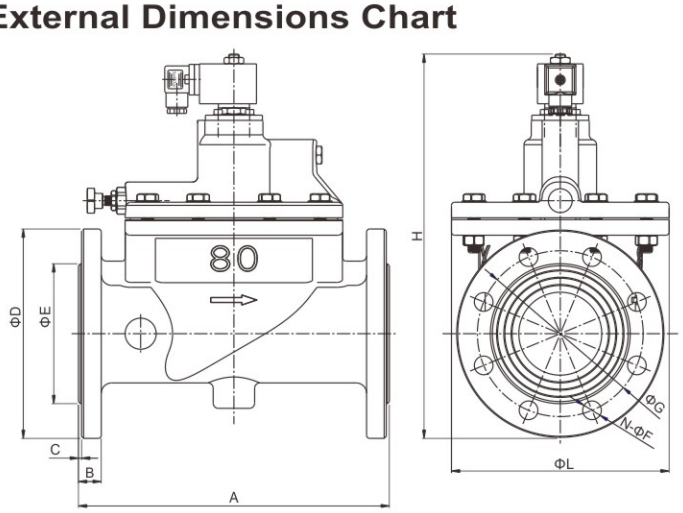



CODE	A	B	C	D	E	N–F	G	H	Material
SLA–65BF	270	22	3	185	125	8–18	145	335	SS304
SLA–80BF	300	22	3	200	135	8–18	165	370	SS304
SLA–100BF	350	24	3	235	165	8–18	190	410	SS304

SLA 2/2-way pilot operated piston solenoid valve · normally closed



External Dimensions Chart（DN150）

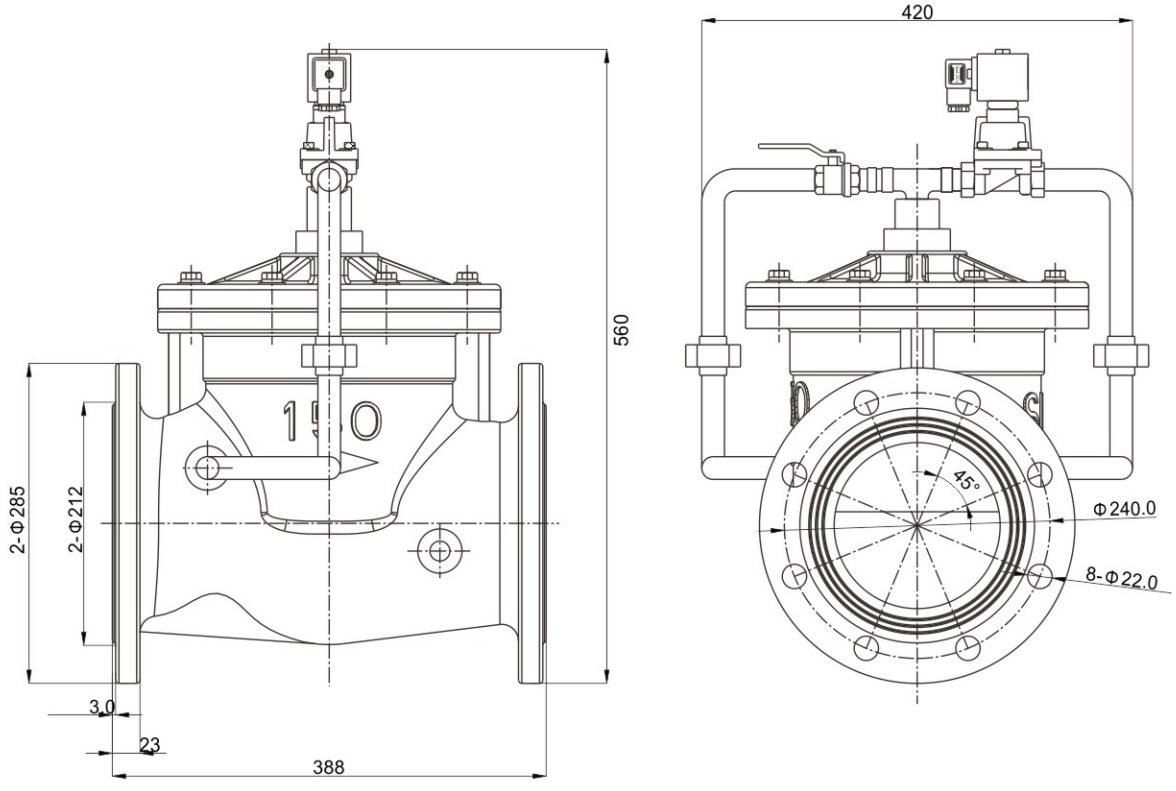

SLA 2/2-way pilot operated piston solenoid valve · normally closed

Components Chart

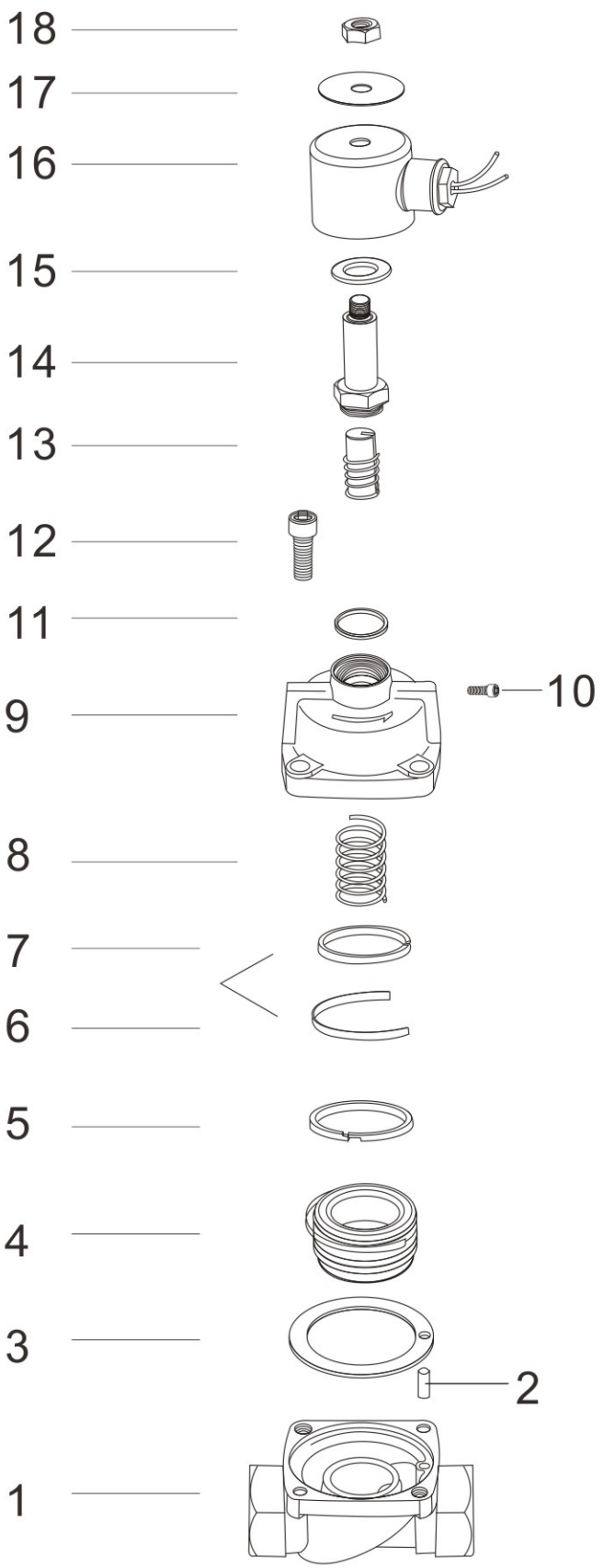

Code	Components
01	Valve Body
02	Fixed Bolt
03	Body Seals Ring
04	Piston Assembly
05	Piston Ring 1
06	Elastic Ring
07	Piston Ring 2
08	Piston Spring
09	Valve Cover
10	Steel Ball
11	Plunger Tube Seal Ring
12	Bolts
13	Plunger Assembly
14	Plunger Tube Assembly
15	Plate
16	Coil
17	Label
18	Lock nut

SLA 2/2-way pilot operated piston solenoid valve · normally open

1: 2-Way normally open solenoid valve;
Open when de-energized, closed when energized.

2: Body material: forged brass

3: Max. Allowable pressure 12kgf/cm^2;
Ambient Temp. 0℃~65℃（F CLASS），0℃~80℃（H CLASS）

4: Serialized products, small in size, large flow rate, widely use.

5: Flow as the arrow, mounts in any position;
Best position is Solenoid vertical and upright direction.

6: Voltage: 220VAC/230VAC/240VAC/110VAC/24VAC 50/60HZ 24VDC/12VDC;
Voltage Tolerance: +10% to -10% applicable voltage.

7: This series valves are offered Teflon Fiberglass for Seals to provide on-off control of various fluids.



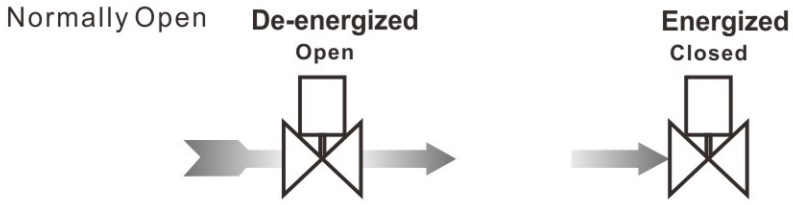

Construction, External Dimensions Chart

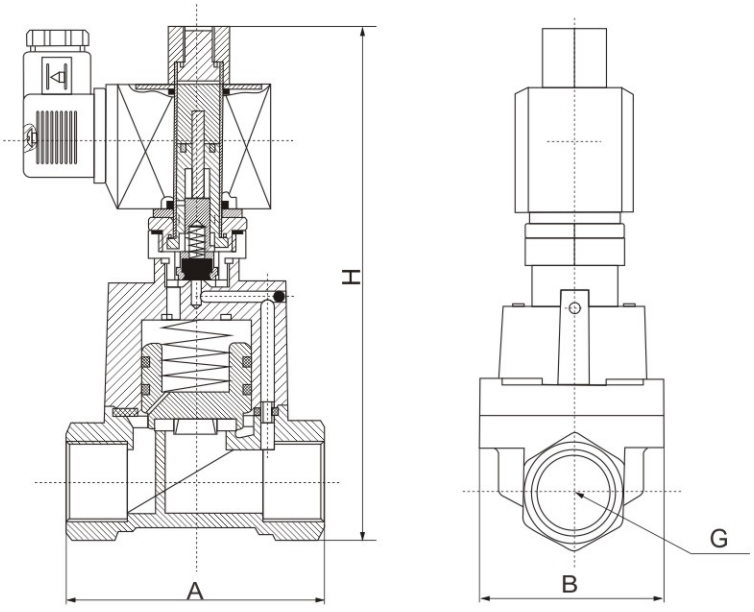

SLA 2/2-way pilot operated piston solenoid valve · normally open

Valve Selection List

Pipe Connection	Orifice mm	CV Factor	Operating pressure differential (kgf/cm²) Min.	Max. Air Gas	Max. Water Hot water Liquids	Max. Light oil	Max. Steam	Max. Fluids Temp.	Coil Type	Power consumption VA AC 220 V	Power consumption W DC 24 V	Coil Class	External Dimensions Length x Width x Height A x B x H	Model Code Follows Voltage are 220VAC 50/60HZ	Weight KG
3/8"	15	4.5	0.5	10	10	10	10	110	D	33	20	F	75×52×147	SLA2DF02V1C15	1.45
	15	4.5	0.5	10	10	10	10	130	W	33	32	H	75×52×147	SLA2WH02E1C15	1.45
1/2"	15	4.5	0.5	10	10	10	10	110	D	33	20	F	75×52×147	SLA2DF02V1D15	1.4
	15	4.5	0.5	10	10	10	10	130	W	33	32	H	75×52×147	SLA2WH02E1D15	1.4
3/4"	20	9.0	0.5	10	10	10	10	110	D	33	20	F	85×60×159	SLA2DF02V1E20	1.7
	20	9.0	0.5	10	10	10	10	130	W	33	32	H	85×60×159	SLA2WH02E1E20	1.7
1"	25	13	0.5	10	10	10	10	110	D	33	20	F	100×70×166	SLA2DF02V1G25	2.1
	25	13	0.5	10	10	10	10	130	W	33	32	H	100×70×166	SLA2WH02E1G25	2.1
1 1/4"	35	26	0.5	6	6	6	6	110	D	33	20	F	120×90×186	SLA2DF02V1H35	3.8
	35	26	0.5	6	6	6	6	130	W	33	32	H	120×90×186	SLA2WH02E1H35	3.8
1 1/2"	35	26	0.5	6	6	6	6	110	D	33	20	F	120×90×186	SLA2DF02V1J35	3.7
	35	26	0.5	6	6	6	6	130	W	33	32	H	120×90×186	SLA2WH02E1J35	3.7
2"	50	48	0.5	6	6	6	6	110	D	33	20	F	150×110×205	SLA2DF02V1K50	4.7
	50	48	0.5	6	6	6	6	130	W	33	32	H	150×110×205	SLA2WH02E1K50	4.7

SLA 2/2-way pilot operated piston solenoid valve · normally open

1: 2-Way normally open solenoid valve; Open when de-energized, closed when energized.

2: Body material forged 304 stainless steel（ standard ）, 316 stainless steel（ special made ）

3: Max. Allowable pressure 12kgf/cm^2;Ambient Temp. 0℃~65℃（ F CLASS ）, 0℃~80℃（ H CLASS ）

4: Serialized products, small in size, large flow rate, widely use.

5: Flow as the arrow, mounts in any position;

Best position is Solenoid vertical and upright direction.

6: Voltage: 220VAC/230VAC/240VAC/110VAC/24VAC 50/60HZ 24VDC/12VDC;

Voltage Tolerance: +10% to -10% applicable voltage.

7: This series valves are offered Teflon Fiberglass for Seals to provide on-off control of various fluids.



Valve Selection List (Female Thread)

Pipe Conn -ection	Orifice mm	CV Factor	Operating pressure differential (kgf/cm^2) Min.	Max. Air Gas	Max. Water Hot water Liquids	Max. Light oil	Max. Steam	Max. Fluids Temp.	Coil Type	Power consumption VA AC 220 V	Power consumption W DC 24 V	Coil Class	External Dimensions Length x Width x Height A x B x H	Model Code Follows Voltage are 220VAC 50/60HZ	Weight (KG)
3/8"	15	4.5	0.5	10	10	10	10	110	D	33	20	F	75×52×147	SLA2DF02V4C15	1.45
	15	4.5	0.5	10	10	10	10	130	W	33	32	H	75×52×147	SLA2WH02E4C15	1.45
1/2"	15	4.5	0.5	10	10	10	10	110	D	33	20	F	75×52×147	SLA2DF02V4D15	1.4
	15	4.5	0.5	10	10	10	10	130	W	33	32	H	75×52×147	SLA2WH02E4D15	1.4
3/4"	20	9.0	0.5	10	10	10	10	110	D	33	20	F	85×60×159	SLA2DF02V4E20	1.7
	20	9.0	0.5	10	10	10	10	130	W	33	32	H	85×60×159	SLA2WH02E4E20	1.7
1"	25	13	0.5	10	10	10	10	110	D	33	20	F	100×70×166	SLA2DF02V4G25	2.1
	25	13	0.5	10	10	10	10	130	W	33	32	H	100×70×166	SLA2WH02E4G25	2.1
1 1/4"	35	26	0.5	6	6	6	6	110	D	33	20	F	120×90×186	SLA2DF02V4H35	3.8
	35	26	0.5	6	6	6	6	130	W	33	32	H	120×90×186	SLA2WH02E4H35	3.8
1 1/2"	35	26	0.5	6	6	6	6	110	D	33	20	F	120×90×186	SLA2DF02V4J35	3.7
	35	26	0.5	6	6	6	6	130	W	33	32	H	120×90×186	SLA2WH02E4J35	3.7
2"	50	48	0.5	6	6	6	6	110	D	33	20	F	150×110×205	SLA2DF02V4K50	4.7
	50	48	0.5	6	6	6	6	130	W	33	32	H	150×110×205	SLA2WH02E4K50	4.7

SLA 2/2-way pilot operated piston solenoid valve · normally open

Valve Selection List (Flange Connection)

Orifice mm	CV Factor	Operating pressure differential (kgf/cm²) Min.	Max. Air Gas AC	Max. Air Gas DC	Max. Water Hot water Liquids AC	Max. Water Hot water Liquids DC	Max. Light oil AC	Max. Light oil DC	Max. Steam AC/DC	Max. Fluids Temp.	Coil Type	Coil Class	Power consumption VA AC 220 V	Power consumption W DC 24 V	Model Code Follows Voltage are 220VAC 50/60HZ	Weight (KG)
25	13	0.5	10	10	10	10	10	10	0	110	D	F	33	20	SLA2DF02V4F25	3.6
25	13	0.5	10	10	10	10	10	10	10	130	W	H	33	32	SLA2WH02E4F25	3.6
35	26	0.5	6	6	6	6	6	6	6	110	D	F	33	20	SLA2DF02V4F35	6.2
35	26	0.5	6	6	6	6	6	6	6	130	W	H	33	32	SLA2WH02E4F35	6.2
40	26	0.5	6	6	6	6	6	6	6	110	D	F	33	20	SLA2DF02V4F40	6.7
40	26	0.5	6	6	6	6	6	6	6	130	W	H	33	32	SLA2WH02E4F40	6.7
45	45	0.5	6	6	6	6	6	6	6	110	D	F	33	20	SLA2DF02V4F50	7.5
45	45	0.5	6	6	6	6	6	6	6	130	W	H	33	32	SLA2WH02E4F50	7.5

External Dimensions Chart

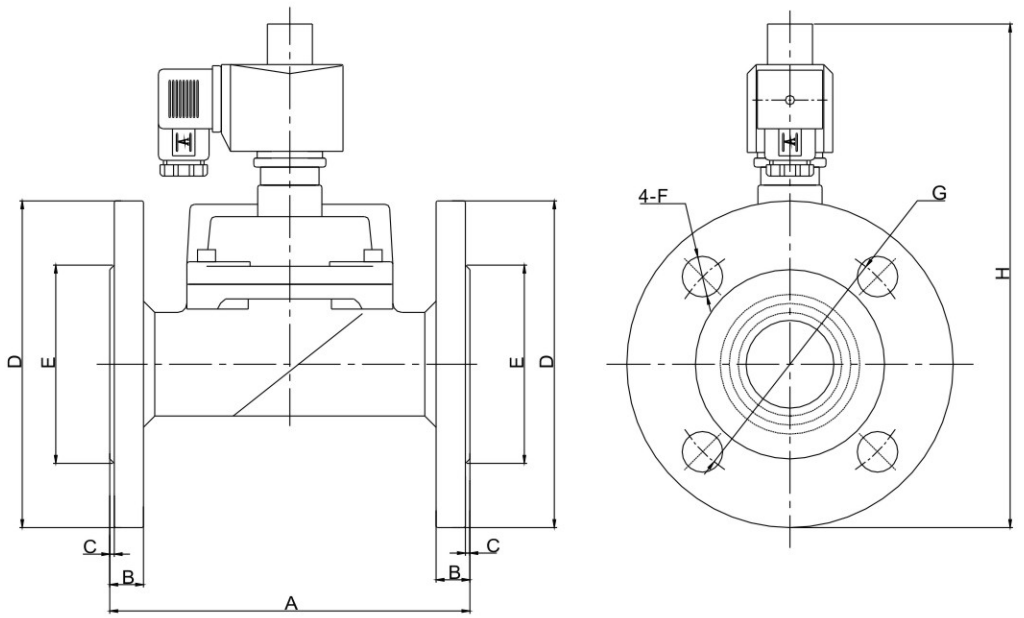

Model	A	B	C	ϕD	ϕE	ϕF	ϕG	H
DN25	134	13	2	110	58	4-14	85	201
DN32	160	15	2	135	76	4-18	100	216
DN40	160	15	2	145	84	4-18	110	221
DN50	200	20	2	165	102	4-18	125	270

SLA series coil parameters tables

SLA Series Coils Characteristics List

Coils Model Code	Voltage	Power consumption					Suitable Valve Model
		50HZ VA		60HZ VA		DC	
		Inrush	Holding	Inrush	Holding	W	
D04-3101	AC220V	55	22	55	18		SLA Normally Closed Series ϕ 2.5~4.5mm
D04-3102	AC110V	55	22	55	18		
D04-3106	DC24V					13	
D04-3107	DC12V					13	
D01-4101	AC220V	82	20	82	20		SLA Normally Closed Series
W09-81101	AC220V	67	33	67	33		
D01-4102	AC110V	82	28	82	28		
W09-81102	AC110V	67	33	67	33		
D01-4106	DC24V					20	
W09-81106	DC24V					24	
D01-4101	AC220V	82	20	82	20		SLA Normally Open Series
D01-4102	AC110V	82	28	82	28		
D01-4106	DC24V					20	
D01-4107	DC12V					20	

SLH 2/2-way high temperature solenoid valve · normally closed



SLH 2/2 way normally closed ,high temperature solenoid valve series ,
it's a common operator in the automatic control system ; adpot the pilot valve ,
radiator , the pistons(main valve) to be a combination structure design ,
energized open , de-energized closed .
Mainly used in the automatic open/closed in the pipeline of steam ,
heat-conducting oil etc high-temperature media
So as to achieve the procedure control or
long-distance control of systems and equipment

Main technical parameters

1, Voltage: AC220V AC110V maintain power AC: 33VA (19.5W)
DC24V power DC: 24W
Voltage tolerance: ±10% （Other voltage can be customized ）

2, Coil type: Standard H Class Metallic Housing ,lead wires （W type ）

3, Media temp: 5℃~225 ℃ (Seals Teflon+Fiberglass)

4, Media:Steam、heat-conducting oil etc(pls choose according to the related seals)

5, Action: Pilot structure solenoid valve, started by operation pressure

6, Body material: Stainless Steel

7, Install:Flow as the arrow, solenoid vertical and coil upright direction

Energized/De-energized Working Chart¨

Normally Closed



External Dimensions¨

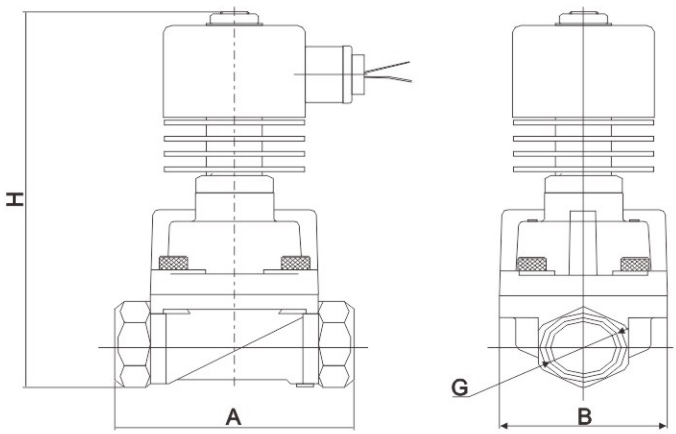

SLH 2/2-way high temperature solenoid valve · normally closed

Valve Selection List

Conn -ection thread	Orifice (mm)	CV factor	Operating pressure differential kgf/cm			Max temp. ℃	External Dimensions Length A x Width B x Height H	Model Code Follows Voltage are AC220V	Weight Kg
			min press ure	Max pressure					
				Heat-condu cting oil	Steam				
3/8"	15	4.5	0.5	25	25	225	75x52x159	SLH1WH02T4C15	1.4
1/2"	15	4.5	0.5	25	25	225	75x52x159	SLH1WH02T4D15	1.36
3/4"	20	8.0	0.5	25	25	225	85x60x171	SLH1WH02T4E20	1.66
1"	25	12	0.5	25	25	225	100x70x178	SLH1WH02T4G25	2.06
1 1/4"	35	22	0.5	25	25	225	120x90x198	SLH1WH02T4H35	3.76
1 1/2"	35	22	0.5	25	25	225	120x90x198	SLH1WH02T4J35	3.66
2"	50	45	0.5	25	25	225	150x110x220	SLH1WH02T4K50	4.36

Solenoid Valves Numbering System for Order

Position description	1	2	3	4	5	6	7	8	9	10
	Valve Series	Mode of Operation	Coil Type	Coil Class	Voltage	Seals Material	Body Material	Pipe Size	Orifice (mm)	Options
E.G.	SLH	1	W	H	02	T	1	E	20	□
		1: Normally Colsed	W: Metallic housing , lead wires	H: H class High temp -erature coil	02= AC220V 01= AC110V 08= AC380V 12= DC12V 13= DC24V	T= Teflon +Fiberglass	4= SS304 3= SS316	C =3/8" D =1/2" E =3/4" G =1" H =1 1/4" J =1 1/2" K =2" F =Flange connection	15=15 20=20 25=25 35=35 40=40 50=50 25=25 32=32 40=35 50=45	Code name: N =NPT Connection

SLH 2/2-way high temperature solenoid valve · normally closed

Valve Selection List (Flange Connection)

Orifice mm	CV factor	Operating pressure differential kgf/cm²			Max temp. ℃	Coil		Model Code Follows Voltage are 220VAC 50/60HZ	Weight Kg
		min pressure	Max pressure			Type	Class		
			Heat-conducting oil	Steam					
25	12	0.5	25	25	225	W	H	SLH1WH02T4F25	3.56
32	22	0.5	25	25	225	W	H	SLH1WH02T4F32	6.16
40	22	0.5	25	25	225	W	H	SLH1WH02T4F40	6.66
50	45	0.5	25	25	225	W	H	SLH1WH02T4F50	7.46

Construction, External Dimensions Chart

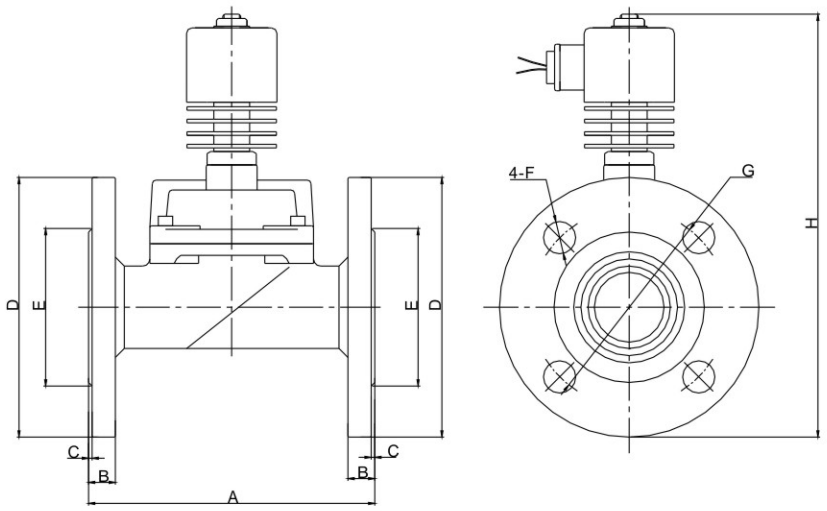

Model	A	B	C	ΦD	ΦE	ΦF	ΦG	H
DN25	134	13	2	110	58	4-14	80	215
DN32	160	15	2	135	76	4-18	100	230
DN40	160	15	2	145	84	4-18	110	235
DN50	200	20	2	165	102	4-18	125	280

ZCT 2/2-way series solenoid valve · normally closed

Solenoid Valves Numbering System for Order

Position description	1	2	3	4	5	6	7	8	9	10
	Valve Series	Mode of Operation	Coil Type	Coil Class	Voltage	Seals Material	Body Material	Pipe Size	Orifice (ϕ mm)	Options
E.G.	ZCT	1	A	H	02	V	5	D	10	□
	ZCT Series	1: Normally Closed	A: Metallic Housing, DIN Standard D: DIN Standard Connections, Fully Encapsulated (for orifice ϕ 3mm only) S: NASS Coil	F:F class H:H class	02=220VAC 230VAC 50/60HZ 01=110VAC 120VAC 50/60HZ 13=DC24V 12=DC12V Contact the Company for other voltage	V: VITON T: Teflon	5=Stainless Steel	A=1/8" B=1/4"	03=3.0	L: Neon Lamp N: NPT Connection
								B=1/4" C=3/8"	04=4.0	
								C=3/8" D=1/2"	06=6.0	
								D=1/2"	10=10.	
								E=3/4" G=1"	15=15.	
							10=PMMA	A=1/8" B=1/4"	03=3.0	
								C=3/8" D=1/2"	06=6.0	
								D=1/2"	10=10.	
								E=3/4" G=1"	15=15.	

ZCT 2/2-way series solenoid valve · normally closed

1: 2-Way normally closed solenoid valve; Closed when de-energized, open when energized.

2: Body material: stainless steel and Plexiglas (standard), brass (special made)

3: Max. Allowable pressure 12kgf/cm^2;

Ambient Temp. 0℃~65℃（F CLASS），0℃~80℃（H CLASS）

4: Flow as the arrow, mounts in any position;

Best position is Solenoid vertical and upright direction.

5: Voltage: 220VAC/230VAC/240VAC/110VAC/24VAC 50/60HZ

24VDC/12V; Voltage Tolerance: +10% to -10% applicable voltage

6: Coil can fix Germany NASS Coil, for the orifice is 3mm only,

Standard voltage: 220VAC 50/60HZ 24VDC

7: This series valves are offered VITON for Seals





Construction, External Dimensions Chart

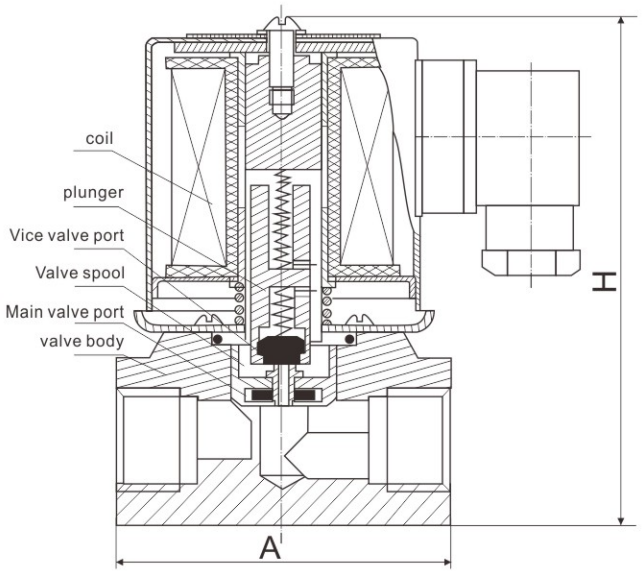

ZCT 2/2-way series solenoid valve · normally closed

Valve Selection List

Pipe Conn -ection	Orifice mm	CV Factor	Operating pressure differential (kgf/cm²) Min.	Max. Air Gas AC	Max. Air Gas DC	Max. Water Hot water Liquids AC	Max. Water Hot water Liquids DC	Max. Light oil AC	Max. Light oil DC	Max. Steam AC/DC	Max. Fluids Temp.	Coil Type	Power consumption VA AC 220 V	Power consumption W DC 24 V	Coil Class	External Dimensions Length x Width x Height A x B x H	Model Code Follows Voltage are 220VAC 50/60HZ	Weight (KG)
1/8"	3	0.23	0	13	10	13	10	10	7	3	130	D	22	13	F	36×36×82	ZCT1DF02V5A03	0.36
1/4"	3	0.23	0	13	10	13	10	10	7	3	130	D	22	13	F	36×36×82	ZCT1DF02V5B03	0.36
	4	0.6	0	7	7	7	7	5	5	3	130	D	22	13	F	50×30×82	ZCT1DF02V5B04	0.8
3/8"	4	0.6	0	7	7	7	7	5	5	3	130	D	22	13	F	50×30×82	ZCT1DF02V5C04	0.8
	6	0.9	0	6	6	6	6	6	6	5	155	A	19.8	12.5	H	50×30×82	ZCT1AH02V5C06	0.7
1/2"	6	0.9	0	6	6	6	6	6	6	5	155	A	19.8	12.5	H	50×30×82	ZCT1AH02V5D06	0.7
	10	1.5	0.1	10	10	10	10	7	7	5	155	A	19.8	22	H	70×38×110	ZCT1AH02V5D10	1.2
3/4"	15	4.5	0.1	10	10	10	10	7	7	5	155	A	19.8	22	H	80×40×115	ZCT1AH02V5E15	1.3
1"	15	4.5	0.1	10	10	10	10	7	7	5	155	A	19.8	22	H	80×40×115	ZCT1AH02V5G15	1.2

ZCT Series · 2/2-Way Plexiglas Solenoid Valve · Normally Closed

Valve Selection List

Pipe Conn -ection	Orifice mm	CV Factor	Operating pressure differential (kgf/cm²) Min.	Max. Air Gas AC	Max. Air Gas DC	Max. Water Hot water Liquids AC	Max. Water Hot water Liquids DC	Max. Fluids Temp.	Coil Type	Power consumption VA AC 220 V	Power consumption W DC 24 V	Coil Class	External Dimensions Length x Width x Height L x W x H	Model Code Follows Voltage are 220VAC 50/60HZ	Weight (KG)
1/4"	6	0.6	0	6	6	6	6	80	D	33	32	F	50×30×82	ZCT1DF02V10B06	0.4
3/8"	6	0.6	0	6	6	6	6	80	D	33	32	F	50×30×82	ZCT1DF02V10C06	0.4
1/2"	6	0.6	0	6	6	6	6	80	D	33	32	F	50×30×82	ZCT1DF02V10D06	0.4
1/2"	10	1.5	0.1	10	10	10	10	80	D	19.8	22	F	70×40×98	ZCT1DF02V10D10	0.55
3/4"	15	4.5	0.1	10	10	10	10	80	D	19.8	22	F	80×40×98	ZCT1DF02V10E15	0.55

SLG series 2/2-way high pressure solenoid valve · normally closed

Solenoid Valves Numbering System for Order

Position description	1	2	3	4	5	6	7	8	9	10
	Valve Series	Mode of Operation	Coil Type	Coil Class	Voltage	Seal Material	Body Material	Pipe Size	Orifice (mm)	Options
E.G.	SLG	1	D	F	02	V	1	A	01	□
	SLG Series	1: Normally Closed	D=DIN Standard Connections, Fully Encapsulated S=NASS Coil M=SM Coil	F:F Class	02=AC220V AC230V 50/60HZ 13=DC=24V Contact the Company for other voltage	N=NRB V=VITON T=Teflon	1=Forged Brass 3=SS316 4=SS304	A=1/8" B=1/4" C=3/8" D=1/2" E=3/4" G=1"	01=1.0 C1=1.2 C2=1.5 02=2.0 C3=2.5 01=1.0 C1=1.2 C2=1.5 02=2.0 C3=2.5 08=8.0 08=8.0 15=15.0 20=20.0 25=25.0	L=Neon lamp N=NPT Connection

SLG Series Coils Characteristics List

Coils Model Code	Voltage	Power consumption					Orifice
		50HZ (VA)		60HZ (VA)		DC	
		Inrush	Holding	Inrush	Holding	W	
S0545 NASS	AC220V	46	24	46	19		
D03-5101	AC220V	55	24	55	19		
S0545 NASS	DC24V					18.5	ϕ1~2.5mm
D03-5106	DC24V					28	
D03-5109*	AC220V	Coil with Rectifier				35	ϕ8mm
D01-4101	AC220V	82	20	82	20		ϕ15~25mm
D03-5106	DC24V					28	ϕ8~25mm

SLG series 2/2-way high pressure solenoid valve · normally closed

1: 2-Way normally closed solenoid valve;
Closed when de-energized, open when energized.

2: Special design， Serialized products .small in size .large flow rate.widely use.

3: Body material: SS304.

4: Ambient Temp. 0℃~65℃； Fluids Temp：0℃~110℃.

5: Flow as the arrow .mounts in any position ;Best position is Solenoid vertical and upright diriction.

6: Voltage: 220VAC /230VAC/380VAC/50/60HZ 24VDC;
Voltage Tolerance: +10% to -10% applicable voltage;
Coil can fix Germany Nass Coil.

Normally closed **De-energized**
Closed

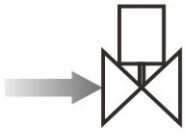

Energized
Open





Construction, External Dimensions Chart

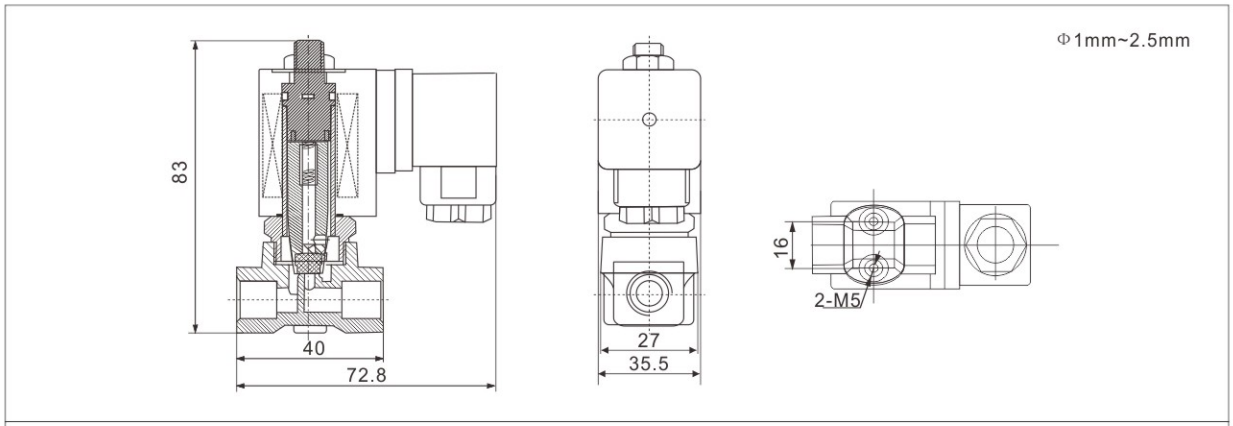

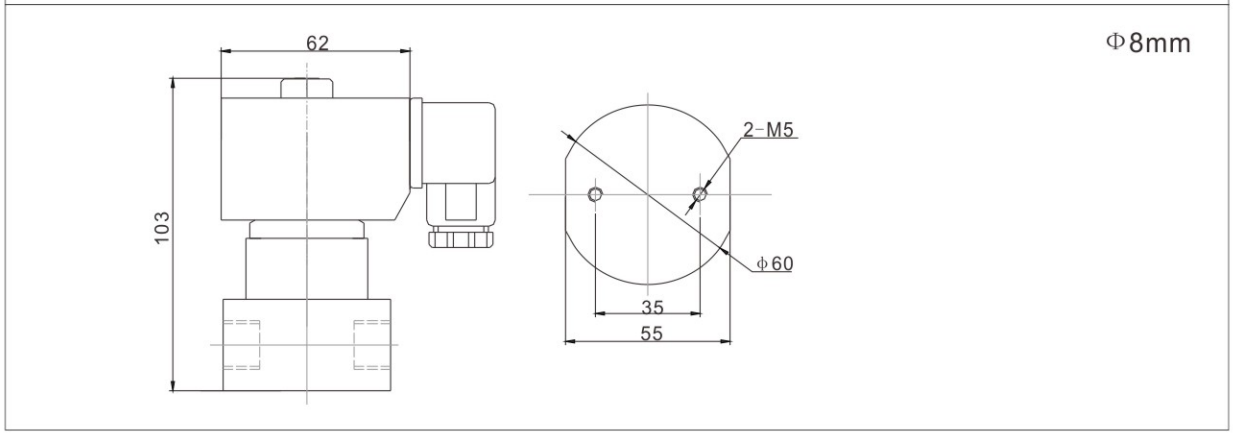

SLG series 2/2-way high pressure solenoid valve · normally closed

Valve Selection List

Pipe Conn -ection	Orifice mm	CV Factor	Operating pressure differential (kgf/cm²) Min.	Max. Air AC	Max. Air DC	Max. Water Liquids AC	Max. Water Liquids DC	Max. Light oil ≤20CST AC	Max. Light oil ≤20CST DC	Max. Temp. ℃	Power consumption VA AC 220V	Power consumption W DC 24V	Model Code Follows Voltage are 220VAC 50/60HZ Body material: Forgeda brass	Model Code Follows Voltage are 220VAC 50/60HZ Body material: Stainless Steel	Weight KG
1/8"	1.0	0.04	0	100	75	100	75	100	75	110	24	18.5	SLG1DF02V1A01	SLG1DF02V3A01	0.43
	1.2	0.05	0	90	70	90	70	90	70	110	24	18.5	SLG1DF02V1AC1	SLG1DF02V3AC1	0.43
	1.5	0.08	0	75	50	75	50	75	50	110	24	18.5	SLG1DF02V1AC2	SLG1DF02V3AC2	0.43
	2.0	0.14	0	35	30	35	30	35	30	110	24	18.5	SLG1DF02V1A02	SLG1DF02V3A02	0.43
	2.5	0.23	0	20	15	20	15	20	15	110	24	18.5	SLG1DF02V1AC3	SLG1DF02V3AC3	0.43
1/4"	1.0	0.04	0	100	75	100	75	100	75	110	24	18.5	SLG1DF02V1B01	SLG1DF02V3B01	0.42
	1.2	0.05	0	90	70	90	70	90	70	110	24	18.5	SLG1DF02V1BC1	SLG1DF02V3BC1	0.42
	1.5	0.08	0	75	50	75	50	75	50	110	24	18.5	SLG1DF02V1BC2	SLG1DF02V3BC2	0.42
	2.0	0.14	0	35	30	35	30	35	30	110	24	18.5	SLG1DF02V1B02	SLG1DF02V3B02	0.42
	2.5	0.23	0	20	15	20	15	20	15	110	24	18.5	SLG1DF02V1BC3	SLG1DF02V3BC3	0.42
	8.0	1.0	0.5	90	70	90	70	70	50	80	35*		SLG1DF02V1B08	SLG1DF02V4B08	1.26
3/8"	8.0	1.2	0.5	90	70	90	70	70	50	80	35*		SLG1DF02V1C08	SLG1DF02V4C08	1.24
	15	4.2	1.0	75	55	75	55	55	35	110	33	25	SLG1DF02N1C15	SLG1DF02N4C15	1.45
1/2"	8.0	1.2	0.5	90	70	90	70	70	50	80	35*		SLG1DF02V1D08	SLG1DF02V4D08	1.21
	15	4.2	1.0	75	55	75	55	55	35	110	33	25	SLG1DF02N1D15	SLG1DF02N4D15	1.4
3/4"	20	7	1.0	65	50	65	50	50	30	110	33	25	SLG1DF02N1E20	SLG1DF02N4E20	1.7
1"	25	11	1.0	55	45	55	45	45	30	110	33	25	SLG1DF02N1G25	SLG1DF02N4G25	2.1

External Dimensions Chart

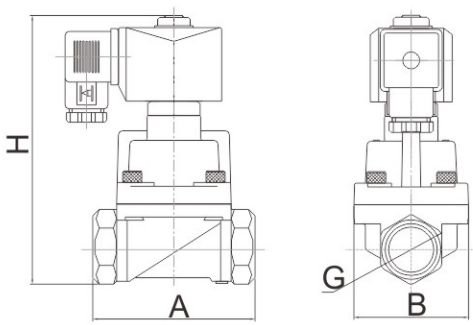

Size / Orifice(mm)	Pipe size G	Length mm A	Width mm B	Height mm H
	3/8"	75	52	130
ϕ15	1/2"	75	52	130
ϕ20	3/4"	85	60	141
ϕ25	1"	100	70	148

SLG series 2/2-way small size high pressure solenoid valve · normally open

1: 2-Way normally open solenoid valve;
open when de-energized, closed when energized.

2: Special design， Serialized products .small in size .large flow rate.widely use.

3: Body material: SS316

4: Ambient Temp.: 0℃~65℃

5: Flow as the arrow .mounts in any position ;Best position is Solenoid vertical and upright diriction.

6: Voltage: 220VAC /230VAC 50/60HZ
DC24V/DC12V
Voltage Tolerance: +10% to -10% applicable voltage;



Normally Open **De-energized Open**



Energized Closed

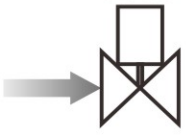

Solenoid Valves Numbering System for Order

Position description	1	2	3	4	5	6	7	8	9
	Valve Series	Mode of Operation	Coil Type	Coil Class	Voltage	Seal Material	Body Material	Pipe Size	Orifice ϕ mm
E.G.	SLG	2	D	F	02	V	3	A	01
		2= Normally Open	D=DIN Standard Connections, Fully Encapsulated	F= F class	02= AC220V AC230V 13= DC=24V Contact the Company for other voltage	N=NRB E=EPDM V=VITON	3= SS316	A=1/8"	C0=0.8 01=1.0 C1=1.2 C2=1.5 02=2.0
								B=1/4"	C0=0.8 01=1.0 C1=1.2 C2=1.5 02=2.0

SLG series 2/2-way small size high pressure solenoid valve · normally open

Valve Selection List

Pipe Conn -ection	Orifice mm	CV Factor	Operating pressure differential (kgf/cm²)		Max. Temp. ℃	Coil Type	Coil Class	Power consumption		Model Code Follows Voltage are 220VAC 50/60HZ	Weight KG
			Min.	Max.				VA AC 220V	W DC 24V		
1/8"	0.8	0.03	0	170	120	D	F	33	20	SLG2DF02V3AC0	0.6
	1.0	0.04	0	150	120	D	F	33	20	SLG2DF02V3A01	
	1.2	0.05	0	90	120	D	F	33	20	SLG2DF02V3AC1	
	1.5	0.08	0	50	120	D	F	33	20	SLG2DF02V3AC2	
	2.0	0.14	0	30	120	D	F	33	20	SLG2DF02V3A02	
1/4"	0.8	0.03	0	170	120	D	F	33	20	SLG2DF02V3BC0	0.59
	1.0	0.04	0	150	120	D	F	33	20	SLG2DF02V3B01	
	1.2	0.05	0	90	120	D	F	33	20	SLG2DF02V3BC1	
	1.5	0.08	0	50	120	D	F	33	20	SLG2DF02V3BC2	
	2.0	0.14	0	30	120	D	F	33	20	SLG2DF02V3B02	

External Dimensions

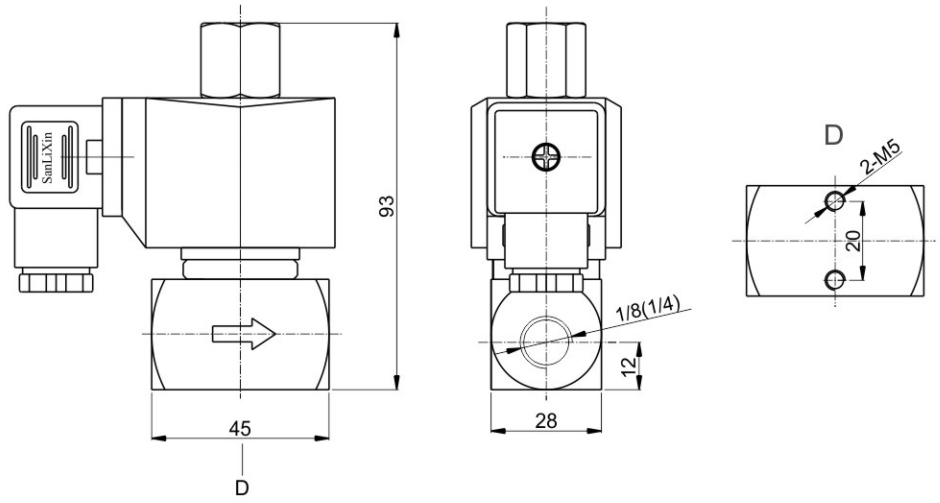

SLGA series 2/2-way high pressure solenoid valve

2-Way normally closed solenoid valve;
Closed when de-energized, open when energized.
Special solenoid valve for bottle blowing machine.
Normally Open is opposite.

Main technical parameters

1: Working pressure: 0.5 ~ 50 kg/cm^2

2: Ambient Temperature: 0~65˚C Media Temperature: 0-90˚C

3: Fixed as the arrow, best position is solenoid vertical and upright direction.

4: Voltage: AC 220V/230V/110V/120V
DC 24V/12V ±10% applicable voltage;

5: Seals: VITON

6: diaphragm material: VITON

7: Body material: brass

8: Can fix SM coil.



Normally Closed



Normally Open

Solenoid Valves Numbering System for Order

Position description	1	2	3	4	5	6	7	8	9	10
	Valve Series	Mode of Operation	Coil Type	Coil Class	Voltage	Seal Material	Body Material	Pipe Size	Orifice ϕ mm	Options
E.G.	SLGA	1	D	F	02	V	1	D	15	☐
		1: Normally Closed 2: Normally Open	D: DIN Standard Connections, Fully Encapsulated M= SM Coil	F= Class	02= AC220V AC230V 13=DC24V	V=VITON	1=Forged Brass	C=3/8" D=1/2" E=3/4"	15=15	L= Neon lamp N: NPT Connection

SLGA series 2/2-way high pressure solenoid valve

SLGA Construction, External Dimensions Chart

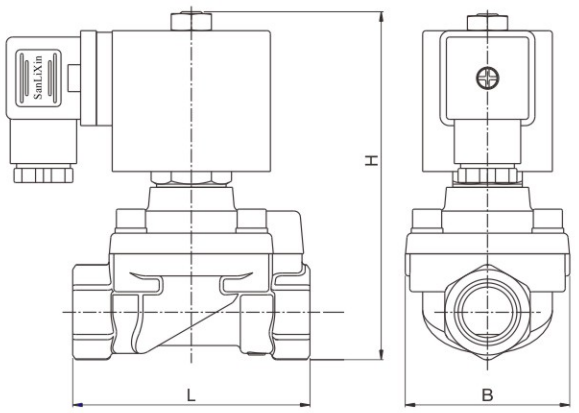

Normally closed

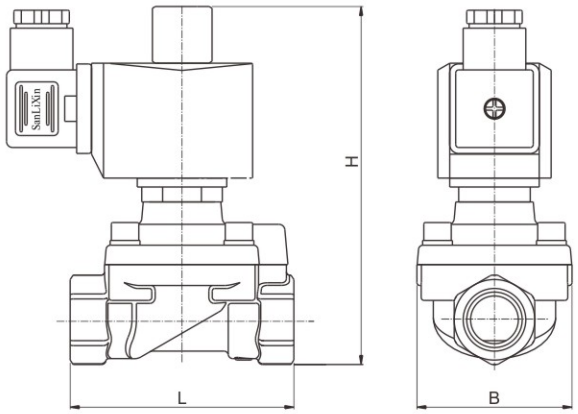

Normally open

External Dimensions Chart （Normally Closed）

SIZE	Orifice mm	CV factor	Operating pressure differential kgf/cm²					Power		Max temp. ℃	External Dimensions Length x Width x Height A x B x H	Model Code Follows Voltage are 220VAC Seal material is VITON	Weight Kg
			min pressure	Max pressure				VA	W				
				Air Gas		Water Liquids		AC 220V	DC 24V				
				AC	DC	AC	DC					Forged Brass	
3/8"	14.5	4.5	0.5	50	50	50	50	19	17	110	75×52×110	SLGA1DF02V1C15	1.0
1/2"	14.5	4.5	0.5	50	50	50	50	19	17	110	75×52×110	SLGA1DF02V1D15	0.9
3/4"	14.5	4.5	0.5	50	50	50	50	19	17	110	80×52×113	SLGA1DF02V1E15	1.1

External Dimensions Chart （Normally Open）

SIZE	Orifice mm	CV factor	Operating pressure differential kgf/cm²					Power		Max temp. ℃	External Dimensions Length x Width x Height A x B x H	Model Code Follows Voltage are 220VAC Seal material is VITON	Weight Kg
			min pressure	Max pressure				VA	W				
				Air Gas		Water Liquids		AC 220V	DC 24V				
				AC	DC	AC	DC					Forged Brass	
3/8"	14.5	4.5	0.5	50	50	50	50	33	20	110	75×52×120	SLGA2DF02V1C15	1.1
1/2"	14.5	4.5	0.5	50	50	50	50	33	20	110	75×52×120	SLGA2DF02V1D15	1.0
3/4"	14.5	4.5	0.5	50	50	50	50	33	20	110	80×52×123	SLGA2DF02V1E15	1.2

SLZ series-2/2-way high pressure solenoid valve · normally closed

1: SLZ Series 2-way normally closed solenoid valve, closed when de-energized, open when energized.
2: Serializzed products, small in size, low power, high pressure.
3: Seals:NBR VITON EPDM
4: Body material: brass SS304
5: Media: air, water,etc.
6: Working pressure: 0~170kg/cm^2
7: Ambient Temperature: 0~65℃ Media Temperature: 0-110℃
8: Fixed as the arrow, best position is solenoid vertical and upright direction.



Solenoid Valves Numbering System for Order

Position description	1	2	3	4	5	6	7	8	9	10
	Valve Series	Mode of Operation	Coil Type	Coil Class	Voltage	Seal Material	Body Material	Pipe Size	Orifice ϕ mm	Options
E.G.	SLZ	1	D	F	02	N	1	A	01	
		1: Normally Closed	D: DIN Standard Connections, Fully Encapsulated	F: Class	02=220VAC 01=110VAC 13=DC24V 12=DC12V	N=NBR V=VITON E=EPDM K=PEEK T=PTFE	1= Forged Brass 3= SS316 4= SS304 5= Stainless steel	A=1/8″ B=1/4″ C=3/8″ D=1/2″	01=1.0 C1=1.2 C2=1.5 02=2.0 C3=2.5 03=3.0 04=4.0 06=6.0 08=8.0 10=10.1	L= Neon lamp N: NPT Connection

Valve Selection List

Pipe Connection	Orifice mm	CV Factor	Operating pressure differential (kgf/cm^2) Min.	Max. Air AC	Max. Air DC	Max. Water Liquids AC	Max. Water Liquids DC	Max. Light oil 20CST AC	Max. Light oil 20CST DC	Max. Temp. ℃	Power VA AC 220	Power W DC 24V	Model Code AC220V 50/60HZ Seals:VITON Body material: Brass	Model Code AC220V 50/60HZ Seals:VITON Body material: Stainless Steel	Weight (KG)
1/8″	1.0	0.04	0	170	110	170	110	160	105	110	19	17	SLZ1DF02V1A01	SLZ1DF02V3A01	0.46
	1.2	0.05	0	150	100	150	100	140	90	110	19	17	SLZ1DF02V1AC1	SLZ1DF02V3AC1	
	1.5	0.08	0	130	86	130	86	120	80	110	19	17	SLZ1DF02V1AC2	SLZ1DF02V3AC2	
	2.0	0.14	0	90	60	90	60	80	50	110	26	17	SLZ1DF02V1A02	SLZ1DF02V3A02	
	2.5	0.23	0	60	40	60	40	50	30	110	26	17	SLZ1DF02V1AC3	SLZ1DF02V3AC3	
	3.0	0.25	0	30	20	30	20	20	13	110	26	17	SLZ1DF02V1A03	SLZ1DF02V3A03	
1/4″	1.0	0.04	0	170	110	170	110	160	105	110	19	17	SLZ1DF02V1B01	SLZ1DF02V3B01	0.45
	1.2	0.05	0	150	100	150	100	140	90	110	19	17	SLZ1DF02V1BC1	SLZ1DF02V3BC1	
	1.5	0.08	0	130	86	130	86	120	80	110	19	17	SLZ1DF02V1BC2	SLZ1DF02V3BC2	
	2.0	0.14	0	90	60	90	60	80	50	110	26	17	SLZ1DF02V1B02	SLZ1DF02V3B02	
	2.5	0.23	0	60	40	60	40	50	30	110	26	17	SLZ1DF02V1BC3	SLZ1DF02V3BC3	
	3.0	0.25	0	30	20	30	20	20	13	110	26	17	SLZ1DF02V1B03	SLZ1DF02V3B03	
3/8″	2.5	0.23	0	60	40	60	40	50	30	110	26	17	SLZ1DF02V1CC3	SLZ1DF02V3CC3	0.45
	3.0	0.25	0	30	20	30	20	20	13	110	26	17	SLZ1DF02V1C03	SLZ1DF02V3C03	
	4.0	0.5	0	12	8	12	8	10	6	110	26	17	SLZ1DF02V1C04	SLZ1DF02V3C04	0.4

Construction, External Dimensions Chart

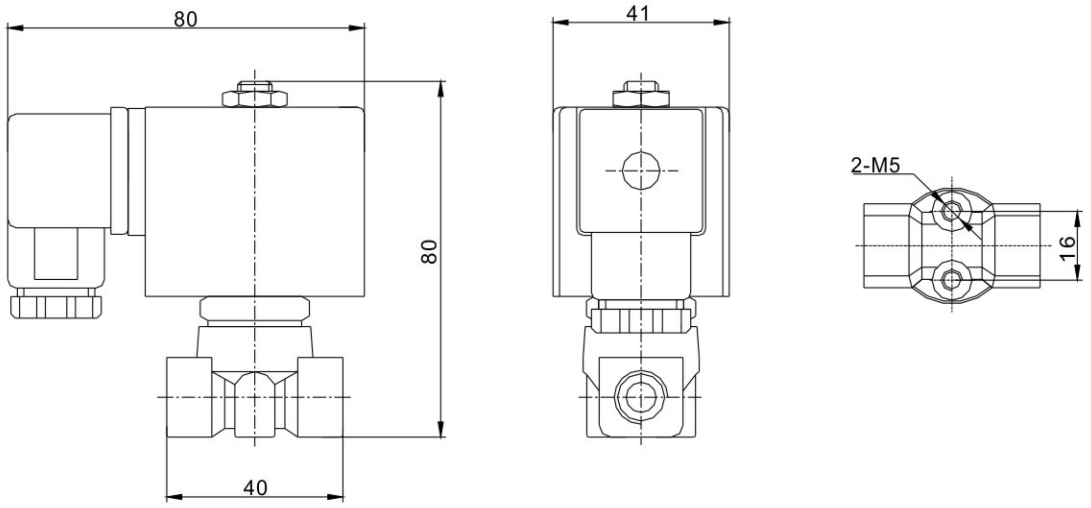

Coils Dimension

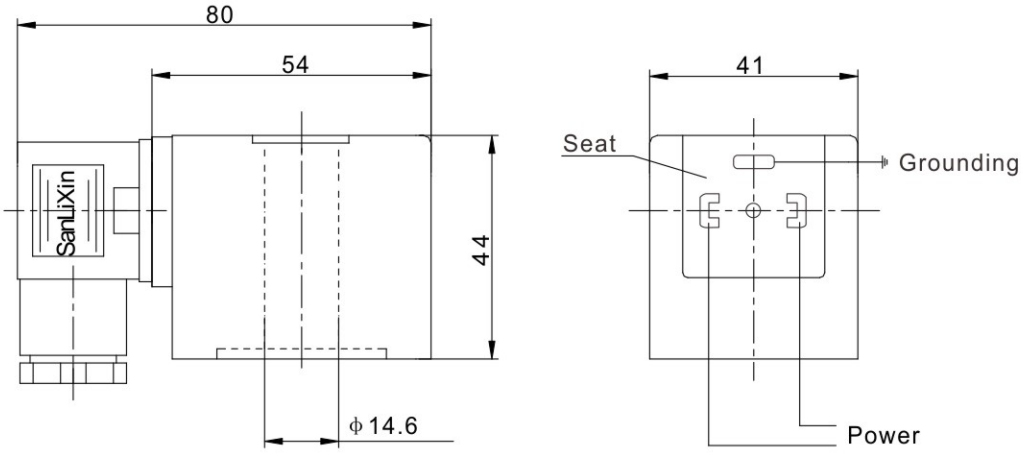

SLZ series high pressure pilot operate solenoid valve · normally closed

1. SLZ Series 2-way normally closed solenoid valve,closed when deenergized, open when energized. Serializzed products, small in size, low power, high pressure.
3. Seals: NBR, VITON, EPDM
4. Body material: Brass, SS316
5. Media: air, water, etc.
6. Working pressure: 0.5~110kgf/cm^2
7. Ambient Temperature: 0~65℃
8. Fixed as the arrow, best position is solenoid vertical andupright direction.
9. Can choose SM coil,
   Voltage: AC220V、AC110V、 AC24V、DC24V



Valve Selection List

Pipe size	Orifice mm	CV	Operating pressure differential(kgf/cm^2)					Power		Max fluid temp ℃	Model Code AC220V 50/60HZ Seals:VITON	Weight (KG)
			Min.	Max.				VA	W			
				Air		Water		AC 220V	DC 24V			
				AC	DC	AC	DC				Stainless Steel	
1/8"	6.0	0.8	0.5	110	90	110	90	19	17	110	SLZ1DF02V5A06	0.57
1/4"	6.0	0.8	0.5	110	90	110	90	19	17	110	SLZ1DF02V5B06	0.57
	8.0	1.0	0.5	110	90	110	90	19	17	110	SLZ1DF02V5B08	0.92
	10.0	1.2	0.5	110	90	110	90	19	17	110	SLZ1DF02V5B10	0.92
3/8"	6.0	0.8	0.5	110	90	110	90	19	17	110	SLZ1DF02V5C06	0.65
	8.0	1.2	0.5	110	90	110	90	19	17	110	SLZ1DF02V5C08	0.9
	10.0	1.5	0.5	110	90	110	90	19	17	110	SLZ1DF02V5C10	0.9
1/2"	6.0	0.8	0.5	110	90	110	90	19	17	110	SLZ1DF02V5D06	0.7
	8.0	1.2	0.5	110	90	110	90	19	17	110	SLZ1DF02V5D08	0.9
	10.0	1.5	0.5	110	90	110	90	19	17	110	SLZ1DF02V5D10	0.9

Note: if add A at the end of code, it means direct acting valve. For example: SLZ1DF02V3B06A

SLZ series high pressure pilot operate solenoid valve · normally closed

External Dimensions Chart

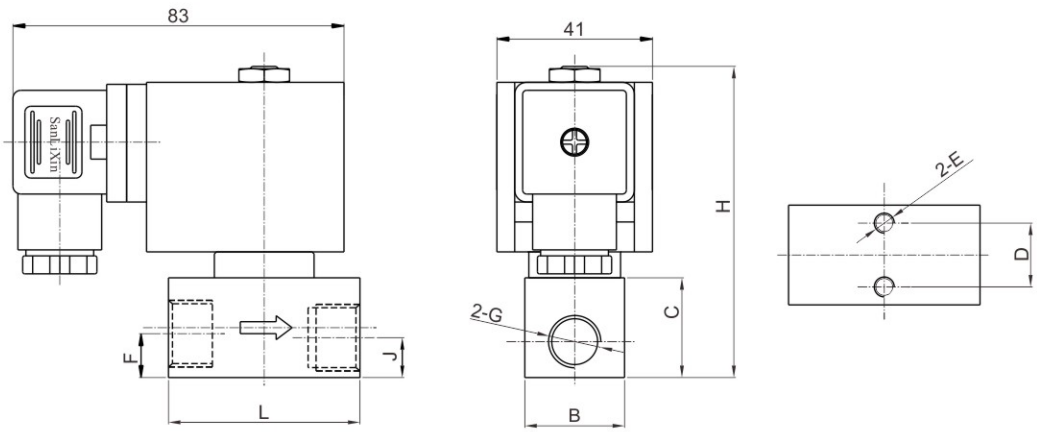

orifice	Pipe G	L	B	C	D	E	F	J	H
Φ6.0	1/8"	48	25	25	16	M5	9	9	78
	1/4"	48	25	25	16		9	9	78
	3/8"	50	30	30	20		13	13	83
	1/2"	58	32	32	20		13	13	85
Φ8.0 Φ10.0	1/4"	67	35	35	22	M6	17.5	13	88
	3/8"	67	35	35	22		16	13	88
	1/2"	67	35	35	22		14.5	13	88

SLZ series-2/2-way high pressure pilot operated solenoid valve · normally closed

1.SLZ Series 2/2-way normally closed pilot operated solenoid valve.
closed when de-energized, open when energized.
2.Serialized products, small in size, Large flow rate, widely use
3.Seal material: PEEK
4.Body material: Brass
5.Fluid medium: air water co_2 etc
6.Orifice size: DN8 Pipe size:G1/4" G3/8"
7. Working pressure:1-150kgf/cm^2
8. Ambient Temp:0-65℃ Medium Temp:-20~100℃
9.Flow as the arrow, mounts in any position
Best position is solenoid vertical and upright direction



Valve Selection List

Pipe size	Orifice mm	CV	Operating pressure differential (bar)				Max fluid temp	consumption		Model code Voltage AC220V 50/60HZ	Weight (KG)
			Min.	Max working pressure				VA	W		
				Air	Water Liquids	Low temp CO_2		A C 220	D C 24V		
1/4″	8	3.1	1	150	150	120	110	22	20	SLZ1DF02K1B08	0.65
3/8″	8	3.1	1	150	150	120	110	22	20	SLZ1DF02K1C08	0.63

Construction,External Dimensions Chart

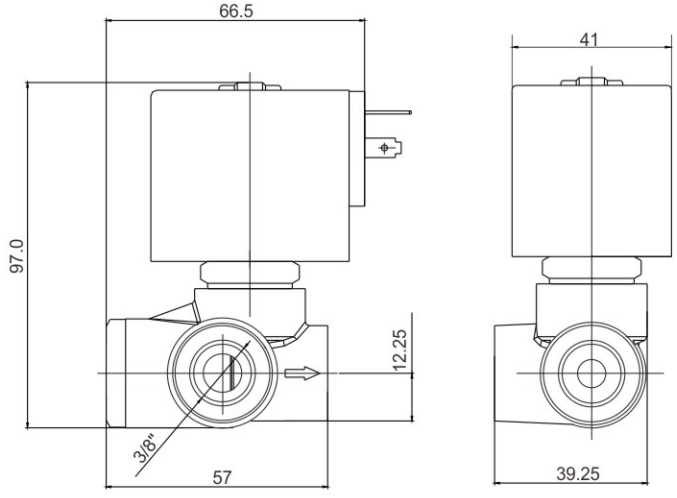

SLV series 3/2-way direct acting solenoid valve

SLV Series 3/2-way direct acting solenoid valve

SLV1 · Normally Colsed;

SLV2 · Normally Open

SLV3 · Diverting;

SLV4 · Universal

SLV5 · Free Exhaust



Body Type: 1 & 3

Solenoid ValvesNumbering System for Order

Position description	1	2	3	4	5	6	7	8	9	10
	Valve Series	Mode of Operation	Coil Type	Coil Class	Voltage	Seal Material	Body Material	Pipe Size	Orifice (ϕ mm)	Options
E.G.	**SLV**	**1**	**D**	**F**	**02**	**N**	**1**	**A**	**V3**	
	SLV Series	1: Normally Closed 2: Normally Open 3: Diverting 4: Universal 5: Normally Closed (Free exhaust)	D: DIN Standard Connections, Fully Encapsulated (For Body type:Brass 1S.S. 3) S: NASS Coil (For Body type:Brass 1 S.S. 3)	F: F Class	02=220VAC 230VAC 50/60HZ 01=110VAC 120VAC 50/60HZ 05=24VAC 13=DC24V 12=DC12V Contact the Company for other voltage	V: VITON E: EPDM N: NBR	1= Brass 3=S.S Body See Valve Selection List	A=1/8″ B=1/4″	V1=1.5×1.2 V2=2.0×1.2 V3=2.5×1.2 V4=3.0×1.2	N =NPT Connection

SLV series 3/2-way direct acting solenoid valve

SLV1 Normally closed type

Pipe Conn -ection	Orifice mm		CV Factor		Operating pressure differential (kgf/cm²) Min.	Max. Air Gas AC	Max. Air Gas DC	Max. Water Liquids AC	Max. Water Liquids DC	Max. Light oil ≤20CST AC	Max. Light oil ≤20CST DC	Max. Fluids Temp.	Coil Type	Power consumption VA AC 220 V	Power consumption W DC 24 V	Coil Class	Model Code Follows Voltage are 220VAC 50/60HZ Brass	Model Code Follows Voltage are 220VAC 50/60HZ S.S.
	Body	Top	Body	Top														
1/8″	1.5	1.2	0.07	0.05	0	10	10	10	10	10	10	80	D	24	18.5	F	SLV1DF02N1AV1	SLV1DF02N3AV1
	2.0	1.2	0.14	0.05	0	8	8	8	8	8	8	80	D	24	18.5	F	SLV1DF02N1AV2	SLV1DF02N3AV2
	2.5	1.2	0.21	0.05	0	5	5	5	5	5	5	80	D	24	18.5	F	SLV1DF02N1AV3	SLV1DF02N3AV3
	3.0	1.2	0.23	0.05	0	4	4	4	4	4	4	80	D	24	18.5	F	SLV1DF02N1AV4	SLV1DF02N3AV4
1/4″	1.5	1.2	0.07	0.05	0	10	10	10	10	10	10	80	D	24	18.5	F	SLV1DF02N1BV1	SLV1DF02N3BV1
	2.0	1.2	0.14	0.05	0	8	8	8	8	8	8	80	D	24	18.5	F	SLV1DF02N1BV2	SLV1DF02N3BV2
	2.5	1.2	0.21	0.05	0	5	5	5	5	5	5	80	D	24	18.5	F	SLV1DF02N1BV3	SLV1DF02N3BV3
	3.0	1.2	0.23	0.05	0	4	4	4	4	4	4	80	D	24	18.5	F	SLV1DF02N1BV4	SLV1DF02N3BV4

Normally closed

De-energized

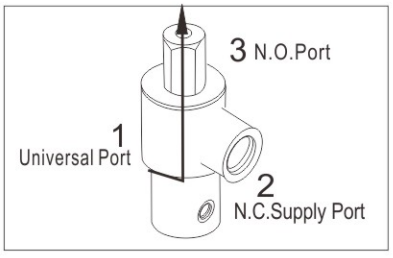

Energized

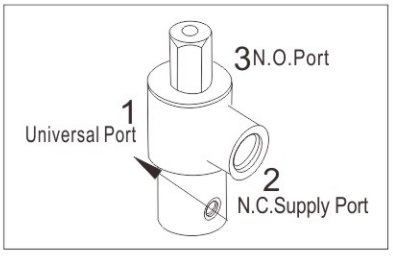

Construction, External Dimensions Chart

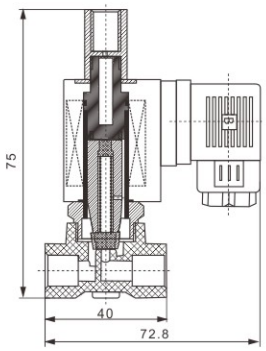

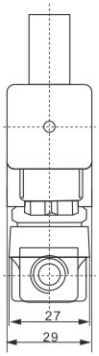

1 & 3 Body Type

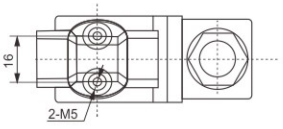

Body 1 N.W=0.42KG
Body 3 N.W=0.35KG

SLV series 3/2-way direct acting solenoid valve

SLV2 Normally Open Type

Pipe Conn -ection	Orifice mm		CV Factor		Operating pressure differential (kgf/cm²) Min.	Max. Air Gas		Max. Water Liquids		Max. Light oil ≤20CST		Max. Fluids Temp.	Coil Type	Power consumption VA AC 220 V	Power consumption W DC 24 V	Coil Class	Model Code Follows Voltage are 220VAC 50/60HZ	
	Body	Top	Body	Top		AC	DC	AC	DC	AC	DC						Brass	S.S.
1/8″	1.5	1.2	0.07	0.05	0	6	5	6	5	6	5	80	D	22	13	F	SLV2DF02N1AV1	SLV2DF02N3AV1
	2.0	1.2	0.14	0.05	0	6	5	6	5	6	5	80	D	22	13	F	SLV2DF02N1AV2	SLV2DF02N3AV2
	2.5	1.2	0.21	0.05	0	6	5	6	5	6	5	80	D	22	13	F	SLV2DF02N1AV3	SLV2DF02N3AV3
	3.0	1.2	0.23	0.05	0	6	5	6	5	6	5	80	D	22	13	F	SLV2DF02N1AV4	SLV2DF02N3AV4
1/4″	1.5	1.2	0.07	0.05	0	6	5	6	5	6	5	80	D	22	13	F	SLV2DF02N1BV1	SLV2DF02N3BV1
	2.0	1.2	0.14	0.05	0	6	5	6	5	6	5	80	D	22	13	F	SLV2DF02N1BV2	SLV2DF02N3BV2
	2.5	1.2	0.21	0.05	0	6	5	6	5	6	5	80	D	22	13	F	SLV2DF02N1BV3	SLV2DF02N3BV3
	3.0	1.2	0.23	0.05	0	6	5	6	5	6	5	80	D	22	13	F	SLV2DF02N1BV4	SLV2DF02N3BV4

Normally Open

De-energized

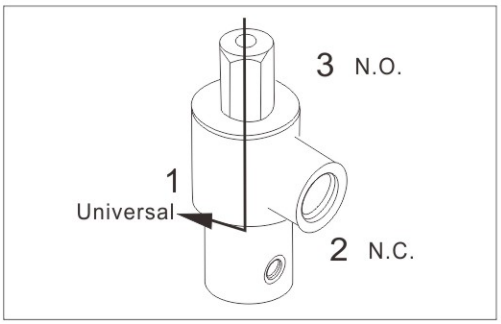

Energized

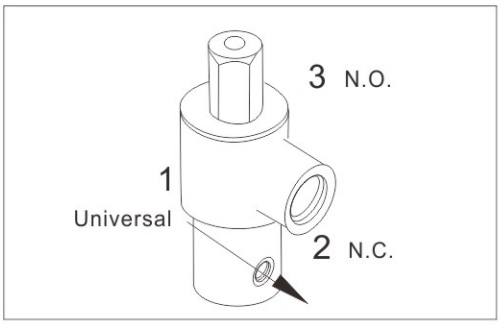

SLV series 3/2-way direct acting solenoid valve

SLV3 Diverting Type

Pipe Conn -ection	Orifice mm		CV Factor		Operating pressure differential (kgf/cm²) Min.	Max. Air Gas		Max. Water Liquids		Max. Light oil ≤20CST		Max. Fluids Temp.	Coil Type	Power consumption VA AC 220 V	Power consumption W DC 24 V	Coil Class	Model Code Follows Voltage 220VAC 50/60HZ	
	Body	Top	Body	Top		AC	DC	AC	DC	AC	DC						Brass	S.S.
1/8″	1.5	1.2	0.07	0.05	0	10	10	10	10	10	10	80	D	22	13	F	SLV3DF02N1AV1	SLV3DF02N3AV1
	2.0	1.2	0.14	0.05	0	10	10	10	10	10	10	80	D	22	13	F	SLV3DF02N1AV2	SLV3DF02N3AV2
	2.5	1.2	0.21	0.05	0	10	10	10	10	10	10	80	D	22	13	F	SLV3DF02N1AV3	SLV3DF02N3AV3
	3.0	1.2	0.23	0.05	0	10	10	10	10	10	10	80	D	22	13	F	SLV3DF02N1AV4	SLV3DF02N3AV4
1/4″	1.5	1.2	0.07	0.05	0	10	10	10	10	10	10	80	D	22	13	F	SLV3DF02N1BV1	SLV5DF02N3BV1
	2.0	1.2	0.14	0.05	0	10	10	10	10	10	10	80	D	22	13	F	SLV3DF02N1BV2	SLV3DF02N3BV2
	2.5	1.2	0.21	0.05	0	10	10	10	10	10	10	80	D	22	13	F	SLV3DF02N1BV3	SLV3DF02N3BV3
	3.0	1.2	0.23	0.05	0	10	10	10	10	10	10	80	D	22	13	F	SLV3DF02N1BV4	SLV3DF02N3BV4

Diverting

De-energized

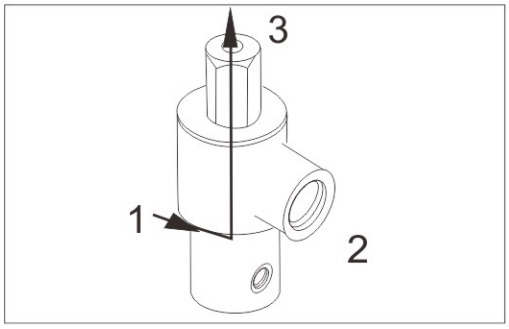

Energized

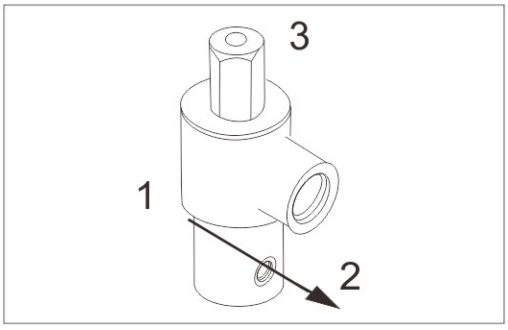

SLV series 3/2-way direct acting solenoid valve

SLV4 Universal Type

Pipe Conn -ection	Orifice mm		CV Factor		Operating pressure differential (kgf/cm²) Min.	Max. Air Gas AC	Max. Air Gas DC	Max. Water Liquids AC	Max. Water Liquids DC	Max. Light oil ≤20CST AC	Max. Light oil ≤20CST DC	Max. Fluids Temp.	Coil Type	Power consumption VA AC 220 V	Power consumption W DC 24 V	Coil Class	Model Code Follows Voltage are 220VAC 50/60HZ Brass	Model Code Follows Voltage are 220VAC 50/60HZ S.S.
	Body	Top	Body	Top														
1/8″	1.5	1.2	0.07	0.05	0	6	4	6	4	6	4	80	D	24	18.5	F	SLV4DF02N1AV1	SLV4DF02N3AV1
	2.0	1.2	0.14	0.05	0	5	3.5	5	3.5	5	3.5	80	D	24	18.5	F	SLV4DF02N1AV2	SLV4DF02N3AV2
	2.5	1.2	0.21	0.05	0	4	3	4	3	4	3	80	D	24	18.5	F	SLV4DF02N1AV3	SLV4DF02N3AV3
	3.0	1.2	0.23	0.05	0	3.5	2.5	3.5	2.5	3.5	2.5	80	D	24	18.5	F	SLV4DF02N1AV4	SLV4DF02N3AV4
1/4″	1.5	1.2	0.07	0.05	0	6	4	6	4	6	4	80	D	24	18.5	F	SLV4DF02N1BV1	SLV4DF02N3BV1
	2.0	1.2	0.14	0.05	0	5	3.5	5	3.5	5	3.5	80	D	24	18.5	F	SLV4DF02N1BV2	SLV4DF02N3BV2
	2.5	1.2	0.21	0.05	0	4	3	4	3	4	3	80	D	24	18.5	F	SLV4DF02N1BV3	SLV4DF02N3BV3
	3.0	1.2	0.23	0.05	0	3.5	2.5	3.5	2.5	3.5	2.5	80	D	24	18.5	F	SLV4DF02N1BV4	SLV4DF02N3BV4

Universal

De-energized

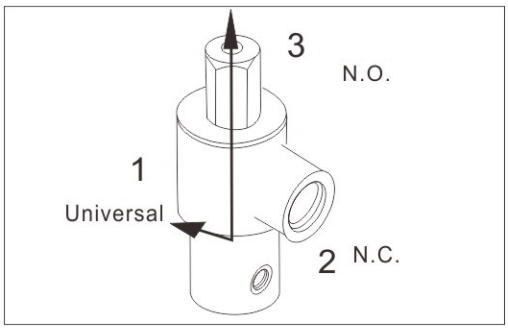

Energized

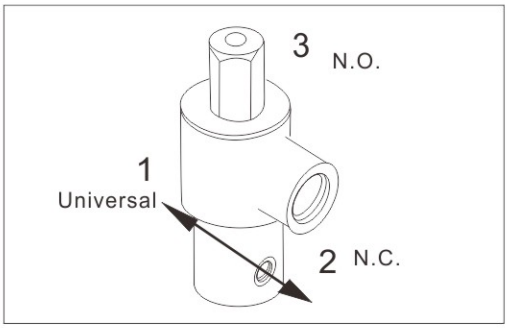

SLV series 3/2-way direct acting solenoid valve

SLV5 Free Exhaust Type

Pipe Conn -ection	Orifice mm		CV Factor		Operating pressure differential (kgf/cm²) Min.	Max. Air Gas		Max. Water Liquids		Max. Light oil ≤20CST		Max. Fluids Temp.	Coil Type	Power consumption VA AC 220 V	Power consumption W DC 24 V	Coil Class	Model Code Follows Voltage are 220VAC 50/60HZ	
	Body	Top	Body	Top		AC	DC	AC	DC	AC	DC						Brass	S.S.
1/8″	1.5	1.2	0.07	0.05	0	10	10	10	10	10	10	80	D	24	18.5	F	SLV5DF02N1AV1	SLV5DF02N3AV1
	2.0	1.2	0.14	0.05	0	8	8	8	8	8	8	80	D	24	18.5	F	SLV5DF02N1AV2	SLV5DF02N3AV2
	2.5	1.2	0.21	0.05	0	5	5	5	5	5	5	80	D	24	18.5	F	SLV5DF02N1AV3	SLV5DF02N3AV3
	3.0	1.2	0.23	0.05	0	4	4	4	4	4	4	80	D	24	18.5	F	SLV5DF02N1AV4	SLV5DF02N3AV4
1/4″	1.5	1.2	0.07	0.05	0	10	10	10	10	10	10	80	D	24	18.5	F	SLV5DF02N1BV1	SLV5DF02N3BV1
	2.0	1.2	0.14	0.05	0	8	8	8	8	8	8	80	D	24	18.5	F	SLV5DF02N1BV2	SLV5DF02N3BV2
	2.5	1.2	0.21	0.05	0	5	5	5	5	5	5	80	D	24	18.5	F	SLV5DF02N1BV3	SLV5DF02N3BV3
	3.0	1.2	0.23	0.05	0	4	4	4	4	4	4	80	D	24	18.5	F	SLV5DF02N1BV4	SLV5DF02N3BV4

Free Exhaust

De-energized

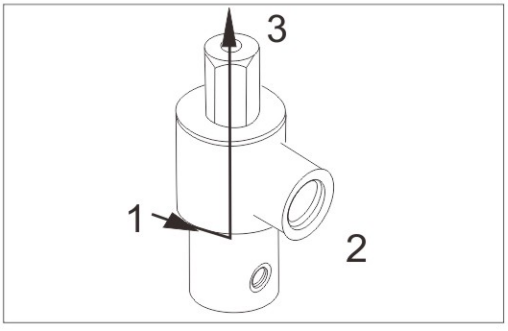

Energized

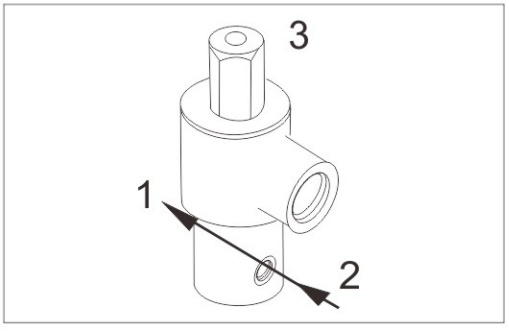

SLV series 3/2-way direct acting solenoid valve

SLV Series Coils Characteristics List

Coils ModelCode	Voltage	Power consumption					Suitable for Valve Model
		50HZ VA		60HZ VA		DC	
		Inrush	Holding	Inrush	Holding	W	
D04-3101	AC220V	55	22	55	18		SLV Series
N04-3101	AC220V	50	20	50	16		
D04-3106 N07-3106	DC24V					13	
D04-3107 N07-3107	DC12V					13	
D06-5451	AC220V	60	24	60	22		
D06-5456	DC24V					18.5	
D06-5457	DC12V					18.5	

SLT series 3/2-way direct acting solenoid valve

SLT1 Normally Closed
SLT2 Normally Open
SLT3 Universal
SLT4 Diverting



body:9.4.3



body:1.5

Solenoid Valve Numbering System for Order:

Position description	1	2	3	4	5	6	7	8	9	10
	Valve Series	Mode of Operation	Coil Type	Coil Class	Voltage	Seals Material	Body Type & Material	Connec -tion	Orifice (mm)	Options
E.G	SLT	1	D	F	02	N	9	A	V3	
		1: Normally Colsed 2: Normally Open 3: Unviersa 4: Diverting	**D**:DIN Standard Connec-tions,Fully Encapsu-lated **W**:Metallic Housing, Lead Wirs **N:** Lead wires water-tight Fully Euca-psulated **X:** Explosio n-proof **M**=SM Coil	**F:** FClass	02=220VAC 230VAC 50/60HZ 01=110VAC 05=24VAC 13=DC24V 12=DC12V Pls contact with company for other voltage	**N:** NBR **V:** VITON **E:** EPDM	1=Forged Brass 4=Round type SS304 (normal） 9=Forged Brass Round Type 3=Round Type SS316 5=SS316	A=1/8" B=1/4"	V1=1.5 V2=2.0 V3=2.5 V4=3.0 V5=4.0	N=NPT Conne-ction

Item and External Dimensions Chart

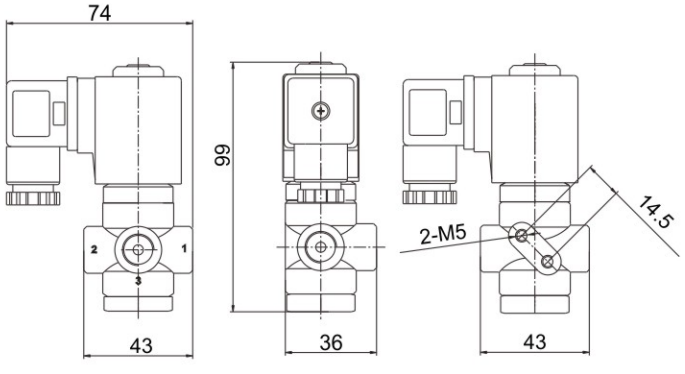

Body:1, 5 Net:0.42kg

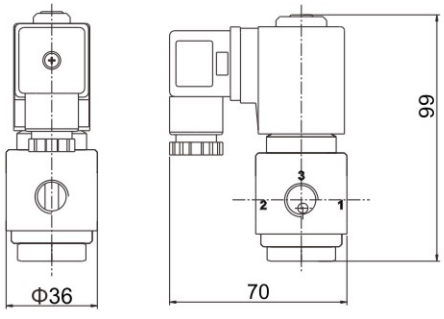

Body:9,4,3 Net:0.49kg

SLT series 3/2-way direct acting solenoid valve

SLT1 Normally Closed Specification List

Pipe Conn -ection	Orifice mm	CV Factor	Operating pressure differential (kgf/cm²) Min.	Max.Pressure Air、Gas Water、Liquid AC	Max.Pressure Air、Gas Water、Liquid DC	Max.Pressure Light oil ≤ 20CST AC	Max.Pressure Light oil ≤ 20CST DC	Max. Temp. ℃	Coil Type	Power consumption VA AC 220V	Power consumption W DC 24V	Coil Class	Model Code Follows Voltage are 220VAC 50/60Hz Brass	Model Code Follows Voltage are 220VAC 50/60Hz SS304
1/8 "	1.5	0.07	0	13	11	13	11	80	D	22	13	F	SLT1DF02N1AV1	SLT1DF02N4AV1
	1.5	0.07	0	13	11	13	11	120	D	22	13	F	SLT1DF02V1AV1	SLT1DF02V4AV1
	2.0	0.14	0	11	9	11	9	80	D	22	13	F	SLT1DF02N1AV2	SLT1DF02N4AV2
	2.0	0.14	0	11	9	11	9	120	D	22	13	F	SLT1DF02V1AV2	SLT1DF02V4AV2
	2.5	0.21	0	9	7	9	7	80	D	22	13	F	SLT1DF02N1AV3	SLT1DF02N4AV3
	2.5	0.21	0	9	7	9	7	120	D	22	13	F	SLT1DF02V1AV3	SLT1DF02V4AV3
	3.0	0.25	0	6	4	6	4	80	D	22	13	F	SLT1DF02N1AV4	SLT1DF02N4AV4
	3.0	0.25	0	6	4	6	4	120	D	22	13	F	SLT1DF02V1AV4	SLT1DF02V4AV4
	4.0	0.35	0	3.5	2	3.5	2	80	D	22	13	F	SLT1DF02N1AV5	SLT1DF02N4AV5
	4.0	0.35	0	3.5	2	3.5	2	120	D	22	13	F	SLT1DF02V1AV5	SLT1DF02V4AV5
1/4 "	1.5	0.07	0	13	11	13	11	80	D	22	13	F	SLT1DF02N1BV1	SLT1DF02N4BV1
	1.5	0.07	0	13	11	13	11	120	D	22	13	F	SLT1DF02V1BV1	SLT1DF02V4BV1
	2.0	0.14	0	11	9	11	9	80	D	22	13	F	SLT1DF02N1BV2	SLT1DF02N4BV2
	2.0	0.14	0	11	9	11	9	120	D	22	13	F	SLT1DF02V1BV2	SLT1DF02V4BV2
	2.5	0.21	0	9	7	9	7	80	D	22	13	F	SLT1DF02N1BV3	SLT1DF02N4BV3
	2.5	0.21	0	9	7	9	7	120	D	22	13	F	SLT1DF02V1BV3	SLT1DF02V4BV3
	3.0	0.25	0	6	4	6	4	80	D	22	13	F	SLT1DF02N1BV4	SLT1DF02N4BV4
	3.0	0.25	0	6	4	6	4	120	D	22	13	F	SLT1DF02V1BV4	SLT1DF02V4BV4
	4.0	0.35	0	3.5	2	3.5	2	80	D	22	13	F	SLT1DF02N1BV5	SLT1DF02N4BV5
	4.0	0.35	0	3.5	2	3.5	2	120	D	22	13	F	SLT1DF02V1BV5	SLT1DF02V4BV5

SLT 1 Normally Closed Energized、De-energized-----Flow Chart

Normally Closed

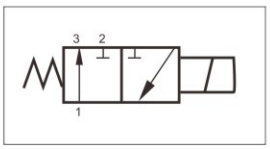

De-energized

Pressure:No.2

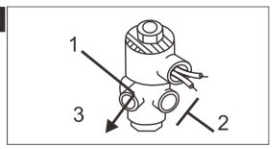

Energized

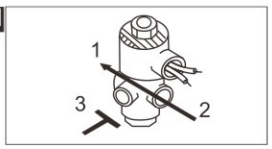

SLT series 3/2-way direct acting solenoid valve

SLT2 Normally Open Specification List

Pipe Conn -ection	Orifice mm	CV Factor	Operating pressure differential (kgf/cm^2) Min.	Max.Pressure Air、Gas Water、liquid AC	Max.Pressure Air、Gas Water、liquid DC	Max.Pressure Light oil ≤ 20CST AC	Max.Pressure Light oil ≤ 20CST DC	Max. Temp. ℃	Coil Type	Power consumption VA AC 220V	Power consumption W DC 24V	Coil Class	Model Code Follows Voltage are 220VAC 50/60Hz Brass	Model Code Follows Voltage are 220VAC 50/60Hz SS304
1/8"	1.5	0.07	0	13	11	13	11	80	D	22	13	F	SLT2DF02N1AV1	SLT2DF02N4AV1
	1.5	0.07	0	13	11	13	11	120	D	22	13	F	SLT2DF02V1AV1	SLT2DF02V4AV1
	2.0	0.14	0	11	9	11	9	80	D	22	13	F	SLT2DF02N1AV2	SLT2DF02N4AV2
	2.0	0.14	0	11	9	11	9	120	D	22	13	F	SLT2DF02V1AV2	SLT2DF02V4AV2
	2.5	0.21	0	9	7	9	7	80	D	22	13	F	SLT2DF02N1AV3	SLT2DF02N4AV3
	2.5	0.21	0	9	7	9	7	120	D	22	13	F	SLT2DF02V1AV3	SLT2DF02V4AV3
	3.0	0.25	0	6	4	6	4	80	D	22	13	F	SLT2DF02N1AV4	SLT2DF02N4AV4
	3.0	0.25	0	6	4	6	4	120	D	22	13	F	SLT2DF02V1AV4	SLT2DF02V4AV4
	4.0	0.35	0	3.5	2	3.5	2	80	D	22	13	F	SLT2DF02N1AV5	SLT2DF02N4AV5
	4.0	0.35	0	3.5	2	3.5	2	120	D	22	13	F	SLT2DF02V1AV5	SLT2DF02V4AV5
1/4"	1.5	0.07	0	13	11	13	11	80	D	22	13	F	SLT2DF02N1BV1	SLT2DF02N4BV1
	1.5	0.07	0	13	11	13	11	120	D	22	13	F	SLT2DF02V1BV1	SLT2DF02V4BV1
	2.0	0.14	0	11	9	11	9	80	D	22	13	F	SLT2DF02N1BV2	SLT2DF02N4BV2
	2.0	0.14	0	11	9	11	9	120	D	22	13	F	SLT2DF02V1BV2	SLT2DF02V4BV2
	2.5	0.21	0	9	7	9	7	80	D	22	13	F	SLT2DF02N1BV3	SLT2DF02N4BV3
	2.5	0.21	0	9	7	9	7	120	D	22	13	F	SLT2DF02V1BV3	SLT2DF02V4BV3
	3.0	0.25	0	6	4	6	4	80	D	22	13	F	SLT2DF02N1BV4	SLT2DF02N4BV4
	3.0	0.25	0	6	4	6	4	120	D	22	13	F	SLT2DF02V1BV4	SLT2DF02V4BV4
	4.0	0.35	0	3.5	2	3.5	2	80	D	22	13	F	SLT2DF02N1BV5	SLT2DF02N4BV5
	4.0	0.35	0	3.5	2	3.5	2	120	D	22	13	F	SLT2DF02V1BV5	SLT2DF02V4BV5

SLT 2 Normally Open Energized、De-energized-----Flow Chart

Normally Open

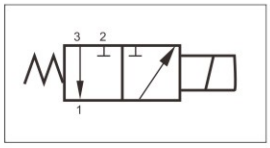

De-energized

Pressure:No.3

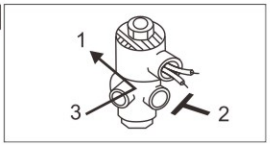

Energized

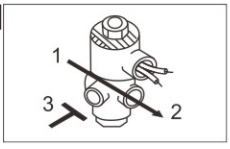

SLT series 3/2-way direct acting solenoid valve

SLT3 Universal Specification List

Pipe Conn -ection	Orifice mm	CV Factor	Operating pressure differential (kgf/cm²) Min.	Max.Pressure Air、Gas Water、liquid AC	Max.Pressure Air、Gas Water、liquid DC	Max.Pressure Light oil ≤ 20CST AC	Max.Pressure Light oil ≤ 20CST DC	Max. Temp. ℃	Coil Type	Power consumption VA AC 220V	Power consumption W DC 24V	Coil Class	Model Code Follows Voltage are 220VAC 50/60Hz Brass	Model Code Follows Voltage are 220VAC 50/60Hz SS304
1/8"	1.5	0.07	0	7	5	7	5	80	D	22	13	F	SLT3DF02N1AV1	SLT3DF02N4AV1
	1.5	0.07	0	7	5	7	5	120	D	22	13	F	SLT3DF02V1AV1	SLT3DF02V4AV1
	2.0	0.14	0	5	4	5	4	80	D	22	13	F	SLT3DF02N1AV2	SLT3DF02N4AV2
	2.0	0.14	0	5	4	5	4	120	D	22	13	F	SLT3DF02V1AV2	SLT3DF02V4AV2
	2.5	0.21	0	4	3	4	3	80	D	22	13	F	SLT3DF02N1AV3	SLT3DF02N4AV3
	2.5	0.21	0	4	3	4	3	120	D	22	13	F	SLT3DF02V1AV3	SLT3DF02V4AV3
	3.0	0.25	0	2.5	2	2.5	2	80	D	22	13	F	SLT3DF02N1AV4	SLT3DF02N4AV4
	3.0	0.25	0	2.5	2	2.5	2	120	D	22	13	F	SLT3DF02V1AV4	SLT3DF02V4AV4
	4.0	0.35	0	1.7	0.8	1.7	0.8	80	D	22	13	F	SLT3DF02N1AV5	SLT3DF02N4AV5
	4.0	0.35	0	1.7	0.8	1.7	0.8	120	D	22	13	F	SLT3DF02V1AV5	SLT3DF02V4AV5
1/4"	1.5	0.07	0	7	5	7	5	80	D	22	13	F	SLT3DF02N1BV1	SLT3DF02N4BV1
	1.5	0.07	0	7	5	7	5	120	D	22	13	F	SLT3DF02V1BV1	SLT3DF02V4BV1
	2.0	0.14	0	5	4	5	4	80	D	22	13	F	SLT3DF02N1BV2	SLT3DF02N4BV2
	2.0	0.14	0	5	4	5	4	120	D	22	13	F	SLT3DF02V1BV2	SLT3DF02V4BV2
	2.5	0.21	0	4	3	4	3	80	D	22	13	F	SLT3DF02N1BV3	SLT3DF02N4BV3
	2.5	0.21	0	4	3	4	3	120	D	22	13	F	SLT3DF02V1BV3	SLT3DF02V4BV3
	3.0	0.25	0	2.5	2	2.5	2	80	D	22	13	F	SLT3DF02N1BV4	SLT3DF02N4BV4
	3.0	0.25	0	2.5	2	2.5	2	120	D	22	13	F	SLT3DF02V1BV4	SLT3DF02V4BV4
	4.0	0.35	0	1.7	0.8	1.7	0.8	80	D	22	13	F	SLT3DF02N1BV5	SLT3DF02N4BV5
	4.0	0.35	0	1.7	0.8	1.7	0.8	120	D	22	13	F	SLT3DF02V1BV5	SLT3DF02V4BV5

SLT 3 Universal Energized/De-energized ---Flow Chart

Universal

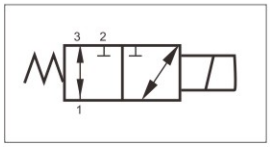

De-energized

Pressure:any port

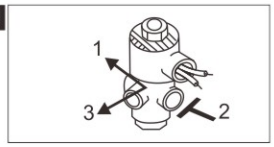

Energized

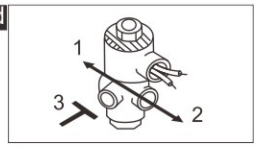

SLT series 3/2-way direct acting solenoid valve

SLT4 Diverting

Pipe Conn -ection	Orifice mm	CV Factor	Operating pressure differential (kgf/cm²) Min.	Max.Pressure Air、Gas Water、liquid AC	Max.Pressure Air、Gas Water、liquid DC	Max.Pressure Light oil ≤ 20CST AC	Max.Pressure Light oil ≤ 20CST DC	Max. Temp. ℃	Coil Type	Power consumption VA AC 220V	Power consumption W DC 24V	Coil Class	Model Code Follows Voltage are 220VAC 50/60Hz Brass	Model Code Follows Voltage are 220VAC 50/60Hz SS304
1/8 "	1.5	0.07	0	13	11	13	11	80	D	22	13	F	SLT4DF02N1AV1	SLT4DF02N4AV1
	1.5	0.07	0	13	11	13	11	120	D	22	13	F	SLT4DF02V1AV1	SLT4DF02V4AV1
	2.0	0.14	0	11	9	11	9	80	D	22	13	F	SLT4DF02N1AV2	SLT4DF02N4AV2
	2.0	0.14	0	11	9	11	9	120	D	22	13	F	SLT4DF02V1AV2	SLT4DF02V4AV2
	2.5	0.21	0	9	7	9	7	80	D	22	13	F	SLT4DF02N1AV3	SLT4DF02N4AV3
	2.5	0.21	0	9	7	9	7	120	D	22	13	F	SLT4DF02V1AV3	SLT4DF02V4AV3
	3.0	0.25	0	6	4	6	4	80	D	22	13	F	SLT4DF02N1AV4	SLT4DF02N4AV4
	3.0	0.25	0	6	4	6	4	120	D	22	13	F	SLT4DF02V1AV4	SLT4DF02V4AV4
	4.0	0.35	0	3.5	2	3.5	2	80	D	22	13	F	SLT4DF02N1AV5	SLT4DF02N4AV5
	4.0	0.35	0	3.5	2	3.5	2	120	D	22	13	F	SLT4DF02V1AV5	SLT4DF02V4AV5
1/4 "	1.5	0.07	0	13	11	13	11	80	D	22	13	F	SLT4DF02N1BV1	SLT4DF02N4BV1
	1.5	0.07	0	13	11	13	11	120	D	22	13	F	SLT4DF02V1BV1	SLT4DF02V4BV1
	2.0	0.14	0	11	9	11	9	80	D	22	13	F	SLT4DF02N1BV2	SLT4DF02N4BV2
	2.0	0.14	0	11	9	11	9	120	D	22	13	F	SLT4DF02V1BV2	SLT4DF02V4BV2
	2.5	0.21	0	9	7	9	7	80	D	22	13	F	SLT4DF02N1BV3	SLT4DF02N4BV3
	2.5	0.21	0	9	7	9	7	120	D	22	13	F	SLT4DF02V1BV3	SLT4DF02V4BV3
	3.0	0.25	0	6	4	6	4	80	D	22	13	F	SLT4DF02N1BV4	SLT4DF02N4BV4
	3.0	0.25	0	6	4	6	4	120	D	22	13	F	SLT4DF02V1BV4	SLT4DF02V4BV4
	4.0	0.35	0	3.5	2	3.5	2	80	D	22	13	F	SLT4DF02N1BV5	SLT4DF02N4BV5
	4.0	0.35	0	3.5	2	3.5	2	120	D	22	13	F	SLT4DF02V1BV5	SLT4DF02V4BV5

SLT 4 Diverting Energized/De-energized ---Flow Chart

Diverting

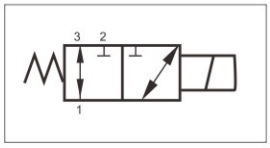

De-energized

Pressure:any port NO.1

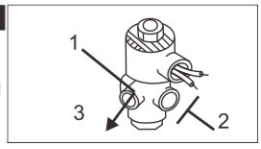

Energized

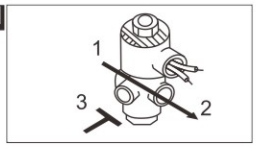

SLT series 3/2-way pilot operated solenoid valve · normally closed

1.SLT series, 3–way solenoid valve feature pilot diaphragm construction together with a high flow rate. This The valve are highly resistant to dust, water deposits and other foreign matter.Capable of working at minimal differential pressures.
2.This valve have normally closed & normally open type
3.Seals：NBR、VITON、EPDM
4.Body Material: Brass
5.Fluid media: Air, Water, ect.
6.Working Pressure: 0.5~10kgf/cm^2
7.Ambient Temp.: 0~65℃； Fluid Temp.:0~120℃
8.Coil can fix SM Coil



Solenoid Valve Numbering System for Order:

1	2	3	4	5	6	7	8	9	10
Series	Operating mode	Coil type	Coil Class	Voltage	Seal material	Body material	Pipe connection	Orifice	Option
SLT	**1**	**D**	**F**	**02**	**N**	**1**	**D**	**16**	
	1 = N.C. 2 = N.O.	D= DIN standard connections , fully encapsulated M= SM series coil	F= F class	02= AC220V 13= DC24V	N=NBR V=VITON E=EPDM	1= Forged brass	C=3/8” D=1/2”	16=16.0	L= With LED Plug N= NPT thread

Construction, external dimensions chart

Weight:1.65kg

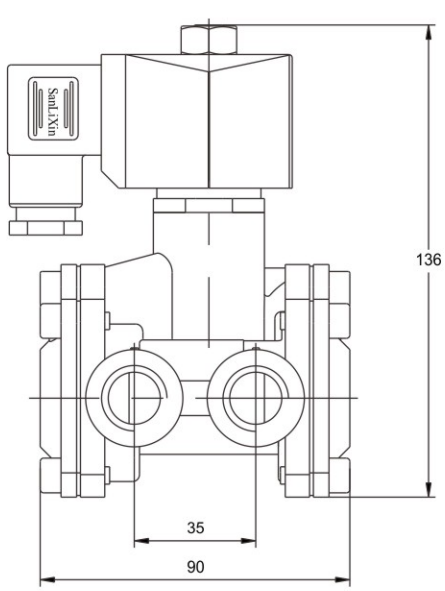

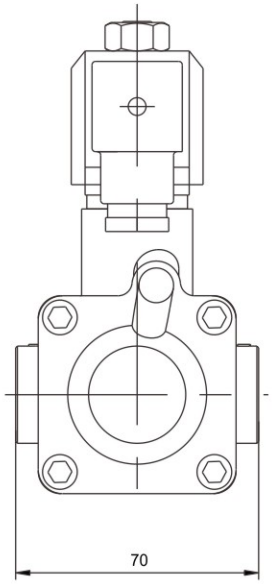

SLT series 3/2-way pilot operated solenoid valve · normally closed

Normally closed type

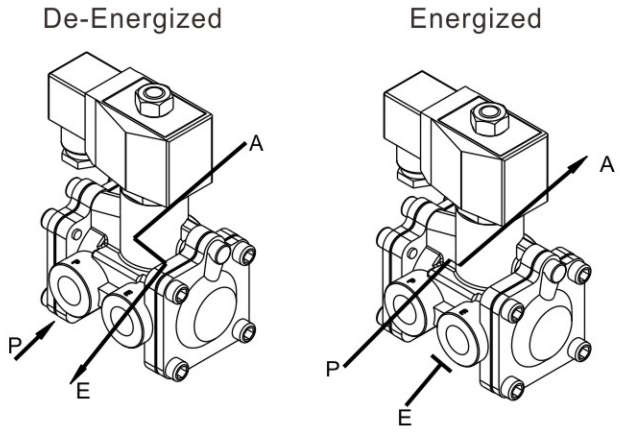

Pipe connection	Orifice mm	CV factor	Operating pressure (kgf/cm²)			Max. Fluids Temp. ℃	Coil class	Power consumption		Model Code AC220V 50/60HZ NBR
			Min.	Max.				VA	W	
				Air	Water, liquids			AC220V	DC24V	
3/8”	16	3.3	0.5	10	10	80	F	20	20	SLT1DF02N1C16
	16	3.3	0.5	10	10	120	F	20	20	SLT1DF02E1C16
	16	3.3	0.5	10	10	120	F	20	20	SLT1DF02V1C16
1/2”	16	3.3	0.5	10	10	80	F	20	20	SLT1DF02N1D16
	16	3.3	0.5	10	10	120	F	20	20	SLT1DF02E1D16
	16	3.3	0.5	10	10	120	F	20	20	SLT1DF02V1D16

Normally open type

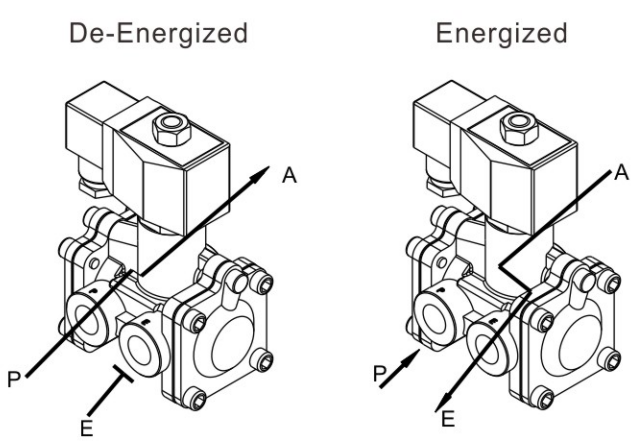

Pipe connection	Orifice mm	CV factor	Operating pressure (kgf/cm²)			Max. Fluids Temp. ℃	Coil class	Power consumption		Model Code AC220V 50/60HZ NBR
			Min.	Max.				VA	W	
				Air	Water, liquids			AC220V	DC24V	
3/8”	16	3.3	0.5	10	10	80	F	20	20	SLT2DF02N1C16
	16	3.3	0.5	10	10	120	F	20	20	SLT2DF02E1C16
	16	3.3	0.5	10	10	120	F	20	20	SLT2DF02V1C16
1/2”	16	3.3	0.5	10	10	80	F	20	20	SLT2DF02N1D16
	16	3.3	0.5	10	10	120	F	20	20	SLT2DF02E1D16
	16	3.3	0.5	10	10	120	F	20	20	SLT2DF02V1D16

SLT series 3/2-way direct acting solenoid valve · universal

1.Seal Material：NBR,EPDM,VITON
2.Valve Body：Brass
3.Fluid media：Gas or Liquid
4.Fluid Temperature：0–80℃
5.Ambient Temperature：–10～+60℃
6.Pressure：0～15Bar
7.Voltage ： AC220V ,DC24V ± 10% Voltage tolerance
8.Installation: the actuator can only be installed vertically upwards



Solenoid Valve Numbering System for Order:

1	2	3	4	5	6	7	8	9	10
Series	Operating mode	Coil type	Coil Class	Voltage	Seal material	Body material	Pipe connection	Orifice	Option
SLT	**3**	**A**	**H**	**02**	**N**	**1**	**H**	**32**	
	3= Universal	A= Metallic Housing, DIN Standard D= DIN Standard Connections, Fully Encapsulated	H= H class F= F class	02= AC220V AC230V 13= DC24V	N=NBR V=VITON E=EPDM	1= Forged brass 3=SS316	B=1/4” C=3/8” D=1/2 " H=1 1/4 " J=1 1/2 "	06=6.0 11=11.0 32=32.0	L= With LED Plug N= NPT thread
						1= Forged brass			

External Dimensions Chart

SIZE	Orifice mm	CV factor	Operating pressure differential kgf/cm²				Max temp. ℃	Power (W)	Model Code Follows Voltage are 220VAC Seal material is NBR	Weight Kg
			min pressure	Max pressure				AC/DC	Forged Brass	
				Air Gas	Water Liquids	Light oil ⩾20CST				
1/4”	6	0.8	0	10	10	8	80	25	SLT3DF02N1B06L	1.1
1/4”	6	0.8	0	10	10	8	80	25	SLT3DF02N3B06L	1.1
3/8"	11	1.1	0	15	15	10	80	46	SLT3AH02N1C11L	5.4
1/2"	11	1.3	0	15	15	10	80	46	SLT3AH02N1D11L	5.4
1 1/4"	32	24	0	10	10	7	80	100	SLT3AH02N1H32L	17.5
1 1/2"	32	24	0	10	10	7	80	100	SLT3AH02N1J32L	17.5

SLT series 3/2-way direct acting solenoid valve · universal

Construction, External Dimensions Chart

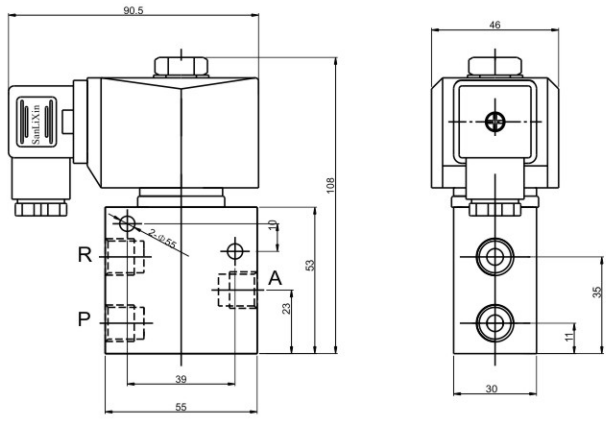

DN6

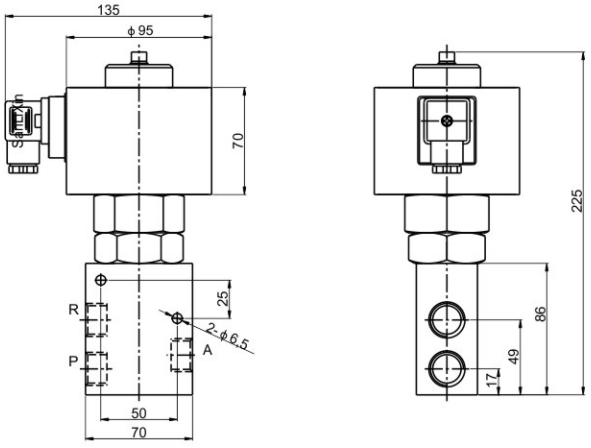

DN11

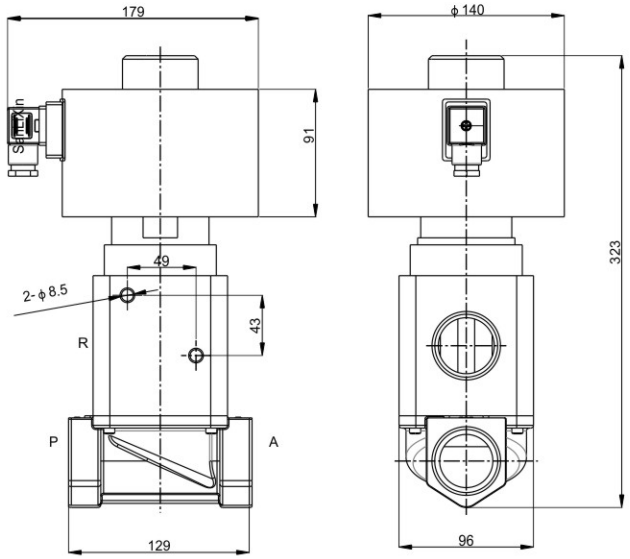

DN32

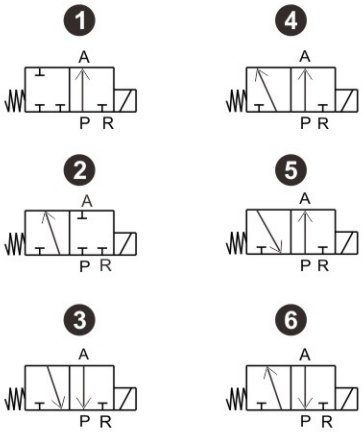

1.2/2 normally closed type: P is the entrance, A is for exit, and R is blocked.

2.2/2 normally open type: R is the entrance, A is for exit, and P is blocked.

3.3/2, 1 in and 2 out of flow type: A is the entrance, P and R are exported.

4.3/ 2,2, 1 out of the confluence type: P,R for entrance, and A for exit.

5.3/2 normally closed type: P is pressure port, A is outlet, R is exhaust port.

6.3/2 normally open type: R is pressure port, A is outlet, P is outlet.

SLC series water dispenser plastic solenoid valve · normally closed

SLC Water Valve

2-way normallyclosed, 1/8 & 1/4 pipe size,plastic valvebody



Specification

Direct acting、 Normally closed
Response time: 6～20MSEL
Mounting: Solenoid vertical and upright direction. Fixing screw M5

Using

Fluid media: water
Fluids temp.:0℃ ~ 100℃
Ambient temp.:-10℃ ~ +40℃

Characteristics

Power consumption: AC 6.8VA (Holding) DC 5W
Voltage: AC: 24V 110V 220V 50/60Hz, DC: 24V
Voltage Tolerance:-10%~+10%
Coil class: Class B 130
Duty cycle: 100%
lead length:30 CM(12")

Construction,External Dimensions Chart

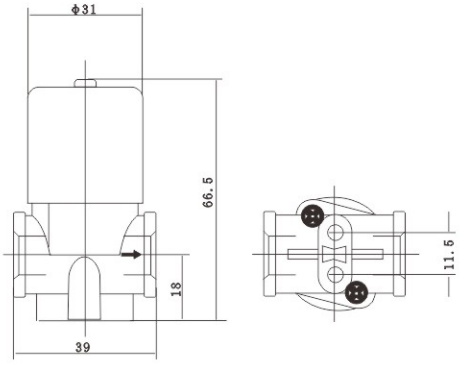

Component Material

Plunger: IJ117
Seals: EPDM
Body: PP, 1/8(black),1/4(white), nylon6
Shading Ring: red copper



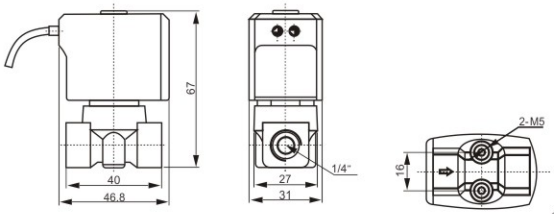

Technical Parameter

Pipe size	Orifice	CV	Operating Pressure PSI			Model Code	Weight (KG)
			MIN	MAX-AC	MAX-DC		
NPT 1/8″	2.5(3/32)	0.21	0	120	120	SLC1	0.12
NPT 1/4″	2.5(3/32)	0.21	0	120	120	SLC2	
NPT 1/8″	3.0	0.23	0	100	100	SLC5	0.2
NPT 1/4″	3.0	0.23	0	100	100	SLC6	

SLC series water dispenser plastic solenoid valve · normally closed

2-way normally closed.plastic Solenoid valve

Characteristics

special diaphragm for foods and separate type

Specification

Direct acting 、
Response time:10～50MSEL
Mounting: Solenoid vertical and upright direction. Fixing screw M4 for SLC-3 Fixing screw M3 for SLC-4



SLC3

Using

Fluid media: water
Fluids temp.:0℃～100℃
Ambient temp.:-10℃～ +40℃



SLC4

Characteristics

Voltage: DC12V DC24V 9.3W
Coil Class: CLASS B 130℃
lead length:30CM

Voltage tolerance

-10%～+10%

Component Material

Plunger: IJ117
Seals: Silica Gel
Body: PP

Technical Parameter

Model Code	Major diameter (insert port)	Orifice Water	Column mm	Weight (KG)
SLC3	12	8	600	0.14
SLC4	12	9	600	

Construction Dimensions Chart

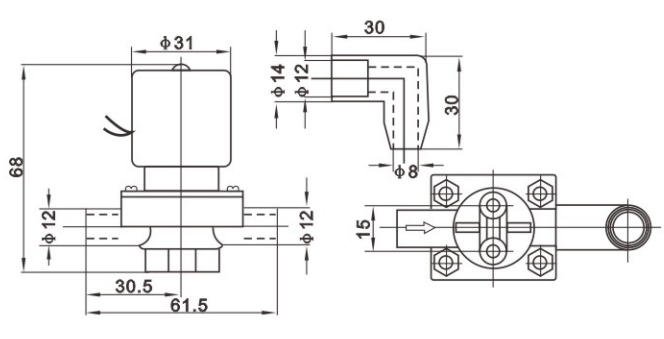

SLC3

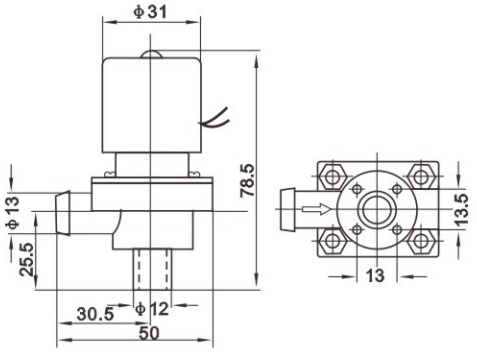

SLC4

SLC series water dispenser plastic solenoid valve · normally closed

Specification

Direct acting, Normally closed
Response time: 6-20 Msel
Upright direction, fixing screw M5



SLC10

Using

Fluid media water
Fluid Temp:0℃to -100℃
Ambient Temperature: -10℃ to 40℃

Characteristic

Power consumption: AC6.8VA(HOLD) DC5W
Voltage: AC24V 110V 220V, DC24V
Voltage Tolerance -10% to +10%
Coil Class: Class B 130℃
Duty cycle: 100%
Lead length: 30CM(12")

Component material

Plunger: Ij117
Seals: EPDM
Body Material: PP white
Shading Ring: Red copper

Construction, external dimensions chart

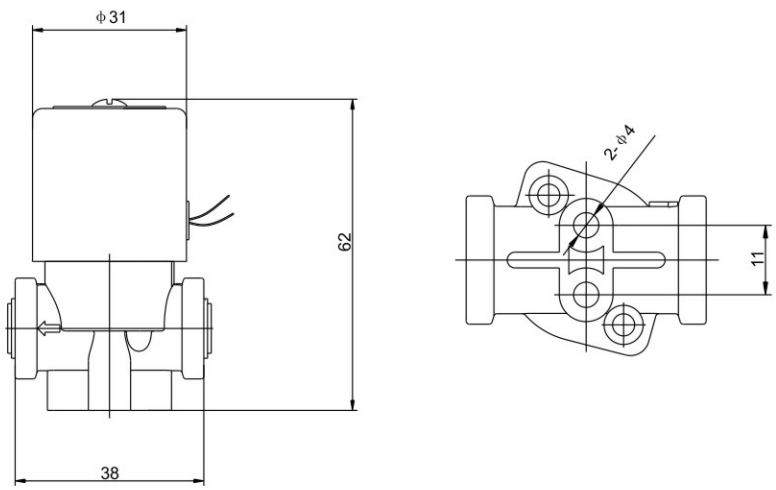

Technical Parameters

Quick connected pipe	Orifice	CV	Operating pressure			Model Code	Weight (KG)
			MIN	MAX-AC	MAX-DC		
R1/4"(ϕ6.35)	2.5（3/32）	0.21	0	120	120	SLC10	0.12

SLC series inlet plastic solenoid valve · normally closed

This series solenoid valve used for
RO machine. coffee machine.

1.Fluid media:water
2. Voltage: DC12V、DC24V ±10% Voltage tolerance，5.6W
3. Fluid temperature: 0~80℃
4. Ambient temperature：−10~+60℃
5. Working pressure: 0.2~8.0bar
6. Life cycle: More than 100000
7. Connection： NPT1/4″（PP quick connect 6.35mm)
8. Material： POM (PP Opetion)
9.Seal material:EPDM
10. Mounting distance 25×25mm



Construction, External Dimensions Chart

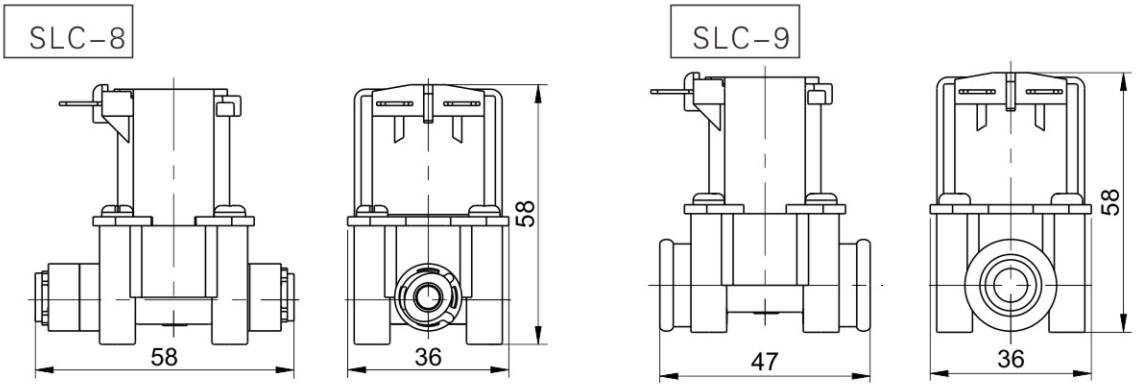

Technical parameters

Model Code	Orifice	Operating pressure (bar)		Connect	Weight (KG)
		MIN	MAX		
SLC-8	10mm	0.2	8.0	quick connect 1/4″ (Φ6.35mm)	0.11
SLC-9	10mm	0.2	8.0	NPT1/4″	0.11

SLC series inlet plastic solenoid valve · normally closed

This series solenoid valve used for
RO machine. coffee machine.

1.Fluid media:water
2. Voltage: DC12V、DC24V ±10% Voltage tolerance， 5.6W
3. Fluid temperature: 0~80℃
4. Ambient temperature：−10~+60℃
5. Working pressure: 0.2~8.0bar
6. Life cycle: More than 100000
7. Connection： 3/8″（quick connect 9.5mm)
8. Material： POM (PP Opetion)
9.Seal material:EPDM
10. Mounting distance 25×25mm



SLC15

Construction, External Dimensions Chart

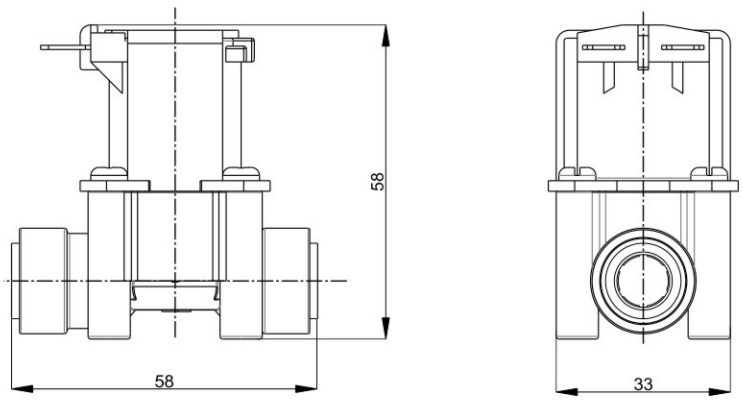

Technical parameters

Model Code	Orifice	Operating pressure (bar)		Connect	Weight (KG)
		MIN	MAX		
SLC−15	10mm	0.2	8.0	quick connect 3/8″ (Φ9.5mm)	0.13

SLC series inlet plastic solenoid valve · normally closed

This series solenoid valve used for
RO machine. coffee machine.

1. Fluid media:water
2. Voltage: DC12V、DC24V ±10% Voltage tolerance，5.6W
3. Fluid temperature: 0~80℃
4. Ambient temperature：−10~+60℃
5. Working pressure: 0.2~8.0bar
6. Life cycle: More than 100000
7. Connection：NPT3/8″，NPT1/2″
8. Material：POM (PP Opetion)
9. Seal material:EPDM
10. Mounting distance 25×25mm



SLC16-17

Construction, External Dimensions Chart

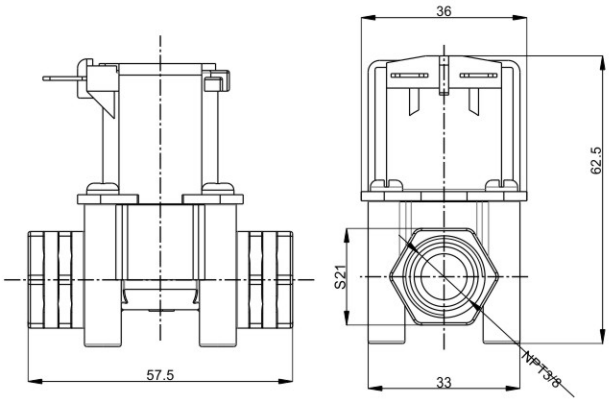

SLC-16

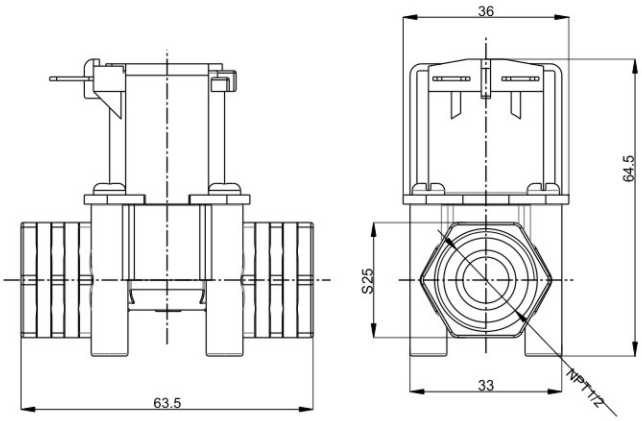

SLC-17

Technical parameters

Model Code	Orifice	Operating pressure (bar)		Connect	Weight (KG)
		MIN	MAX		
SLC−16	10mm	0.2	8.0	NPT 3/8	0.11
SLC−17	10mm	0.2	8.0	NPT 1/2	0.12

SLC series inlet plastic solenoid valve · normally closed

This series solenoid valve used for
RO machine. coffee machine.

1. Fluid media:water
2. Voltage: DC12V、DC24V ±10% Voltage tolerance， 5.6W
3. Fluid temperature: 0~80℃
4. Ambient temperature：−10~+60℃
5. Working pressure: 0.2~8.0bar
6. Life cycle: More than 100000
7. Connection： G3/8″ , G1/2″
8. Material： POM (PP Opetion)
9. Seal material:EPDM
10. Mounting distance 25×25mm



SLC18-19

Construction, External Dimensions Chart

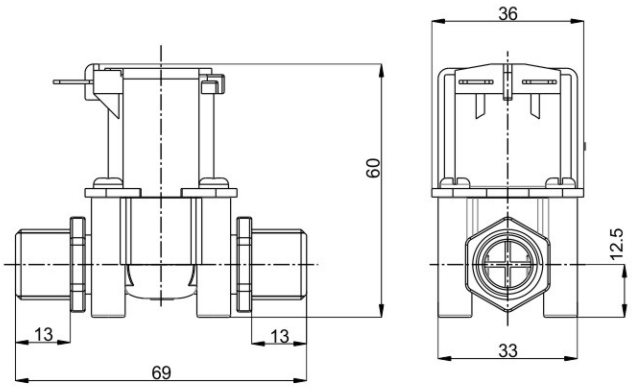

SLC-18

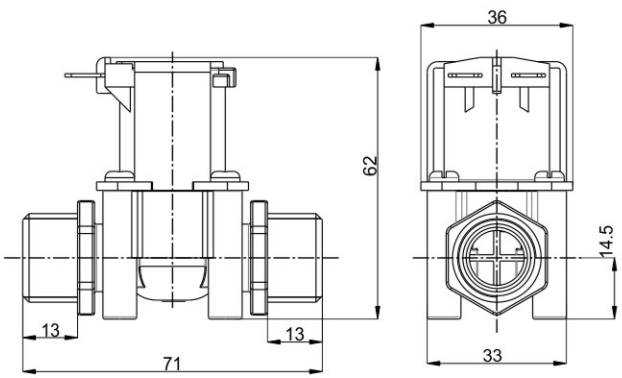

SLC-19

Technical parameters

Model Code	Orifice	Operating pressure (bar)		Connect	Weight (KG)
		MIN	MAX		
SLC−18	10mm	0.2	8.0	G 3/8	0.11
SLC−19	10mm	0.2	8.0	G 1/2	0.12

SLC series outlet plastic solenoid valve · normally closed

This series solenoid valve used for
RO machine. coffee machine.

1. Fluid media:water

2. Voltage: DC12V、DC24V ±10% Voltage tolerance，8.5W

3. Fluid temperature: 0~100℃

4. Ambient temperature：−10~+60℃

5. Working pressure: 0~0.5PSI

6. Life cycle: More than 100000

7. Material：PES

8. Seal material:silicon

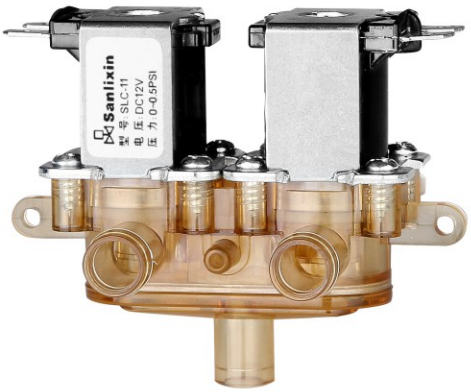

SLC12

Construction, External Dimensions Chart

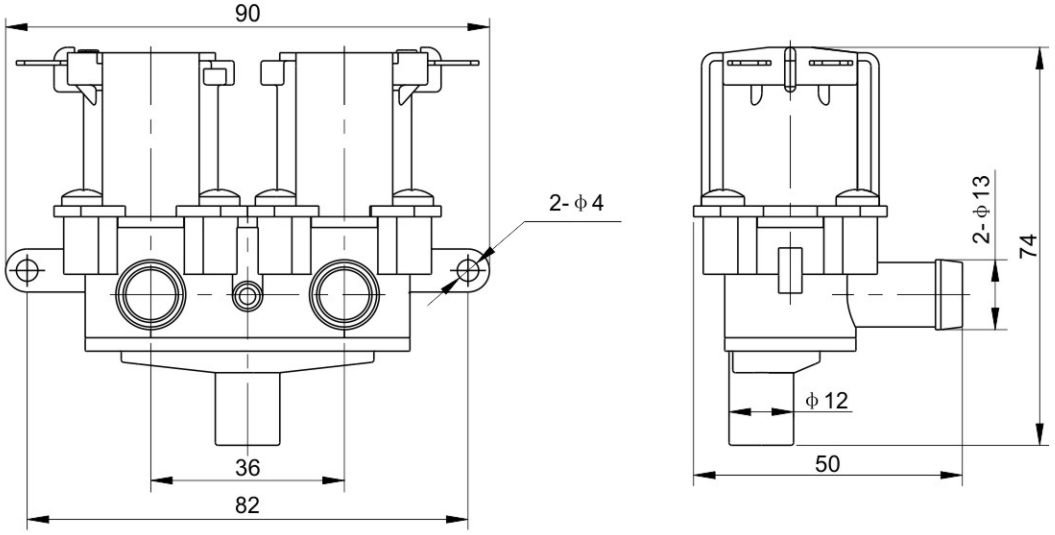

Technical parameters

Model Code	Orifice	Operating pressure (bar)		Connect	Weight (KG)
		MIN	MAX		
SLC−12	10mm	0	0.5	inlet 2 × Φ13, outlet Φ12	0.22

SLC series outlet plastic solenoid valve · normally closed

This series solenoid valve used for
RO machine. coffee machine.

1. Fluid media:water

2. Voltage: DC12V、DC24V ±10% Voltage tolerance，8.5W

3. Fluid temperature: 0~80℃

4. Ambient temperature：−10~+60℃

5. Working pressure: 0~0.5PSI

6. Life cycle: More than 100000

7. Material: POM (PP Opetion)

8. Seal material:silicon



SLC13

Technical parameters

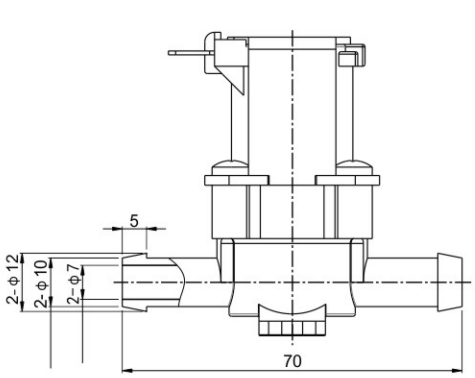

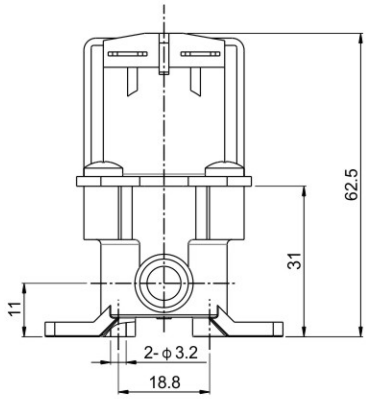

Technical parameters

Model Code	Orifice	Operating pressure (bar)		Connect	Weight (KG)
		MIN	MAX		
SLC−13	10mm	0	0.5	inlet Φ12, outletΦ12	0.11

SLC series waste water plastic solenoid valve·normally closed

This series solenoid valve used for
RO machine. coffee machine.

1. Fluid media:water

2. Voltage: DC12V、DC24V ±10% Voltage tolerance，5.6W

3. Fluid temperature: 0~80℃

4. Ambient temperature：−10~+60℃

5. Working pressure: 0.2~8.0bar

6. Life cycle: More than 100000

7. Material: POM (PP Opetion)

8. Seal material:EPDM



SLC14

Technical parameters

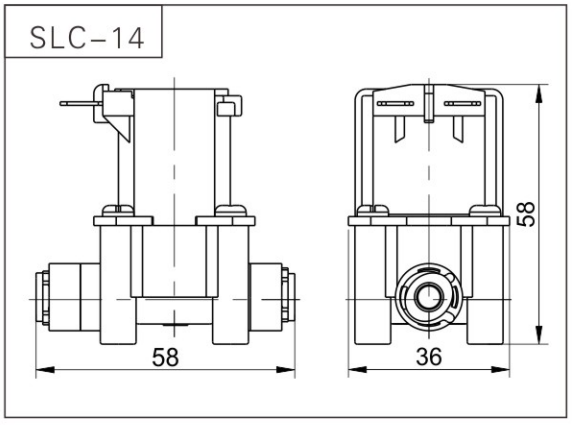

Technical parameters

Model Code	Orifice	Operating pressure (bar)		Connect	Weight (KG)
		MIN	MAX		
SLC−14	10mm	0.2	8.0	quick connect 1/4" (Φ6.35mm)	0.11

Flow characteristics

Water Pressure	0.3Mpa	0.42Mpa
Flow rate	>3L/min	Waste water flow：300±10%ml/min

2W series 2/2-way direct acting solenoid valve · normally closed

2W | **160** | **15** | **V** | **AC220V**

- 2W: 2 Way Direct Acting
- 160: Orifice
- 15: Pipe Size
- V: Blank:NBR; V:For High Temp.
- AC220V: Available Voltage — AC:110V; AC:220V; DC :24V; Contact the Factory for Others



Specifications

Model code	2W025-06	2W025-08	2W040-10	2W100-10	2W160-10	2W100-15	2W160-15	2W200-20	2W250-25	2W350-35	2W400-40	2W500-50
Pipe Size	1/8″	1/4″	3/8″			1/2″		3/4″	1″	1 1/4″	11/2″	2″
Orifice	2.5mm		4mm	10mm	16mm	10mm	16mm	20mm	25mm	32mm	40mm	50mm
Cv Factor	0.23		0.6	1.6	4.8	1.6	4.8	7.6	12	24	29	48
Fluid Media	Air, Water, Oil, Gas											
Operating Mode	Direct Acting											
Type	Normally Closed											
Viscosity	Under 20 CST											
Operating Pressure	Water:0~7bar Air:0~7bar Oil:0~5bar											
Available Voltage	AC220V AC110V DC24V DC12V ±10%											
Body Material	Brass											
Seals Material	NBR or VITON											

Construction Dimensions Chart

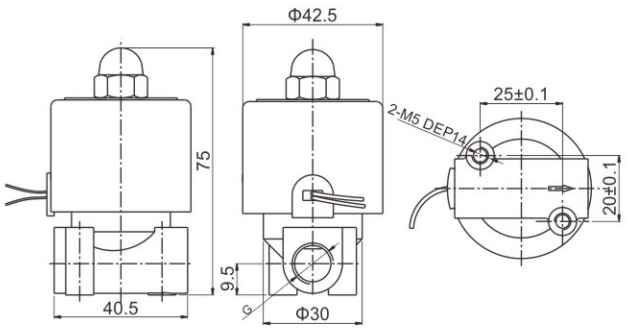

2W025-06

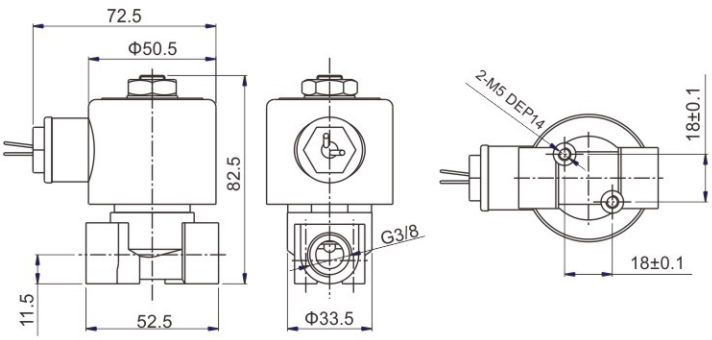

2W040-10

2W series 2/2-way direct acting solenoid valve · normally closed

Construction Dimensions Chart

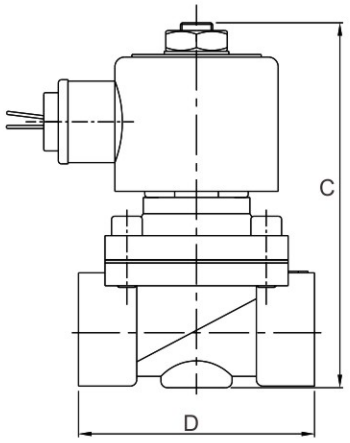

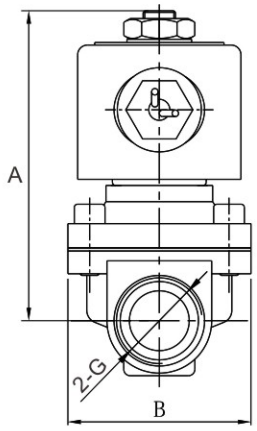

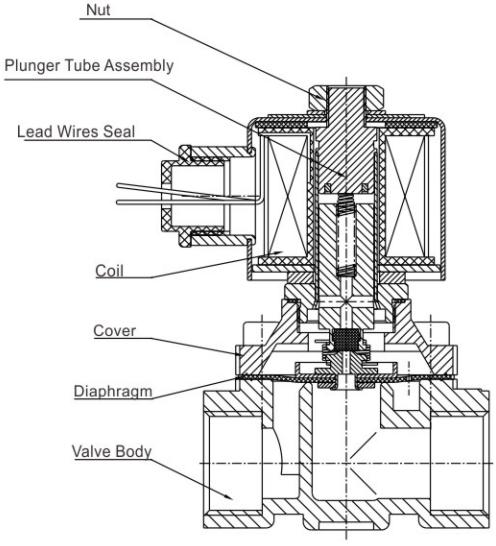

Technical Parameter

Model code	A	B	C	D	G	Weight (KG)
2W100-10	90	40.5	98	50	3/8″	0.64
2W100-15	90	40.5	98	50	1/2″	0.68
2W160-10	101.5	57	106	69	3/8″	0.9
2W160-15	101.5	57	106	69	1/2″	0.9
2W200-20	107	57	113	73	3/4″	1.0
2W250-25	101	73.5	122	99	1″	1.5
2W350-35	124	95	148	112	1 1/4″	2.4
2W400-40	130	95	158	123	1 1/2″	2.7
2W500-50	140	123	174	168	2″	4.5

Fluid Flow Chart

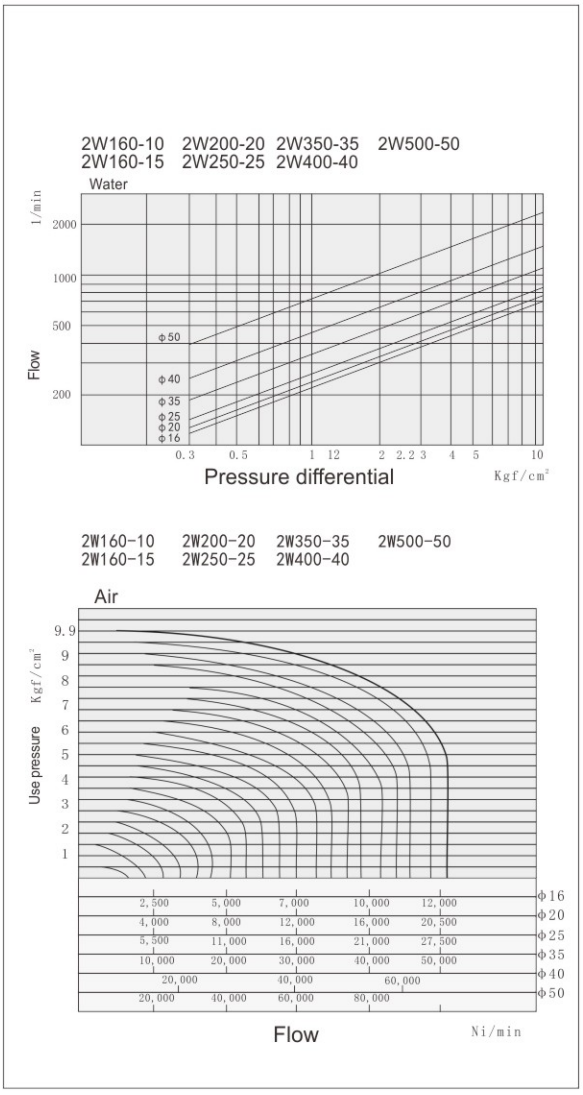

2W series 2/2-way direct acting solenoid valve · normally closed

Technical Parameter (Female Thread)

Model code	L	H	Pipe Size	Weight (KG)
2W025-06B	40.5	75	1/8″	0.30
2W025-08B	40.5	75	1/4″	0.29
2W040-10B	52.5	85.5	3/8″	0.6
2W160-10B	69	106	3/8″	0.85
2W160-15B	69	106	1/2″	0.8
2W200-20B	73	113	3/4″	1.1
2W250-25B	99	122	G1″	1.45
2W350-35B	112	148	1 1/4″	2.3
2W400-40B	123	158	1 1/2″	2.9
2W500-50B	168	174	2″	4.8

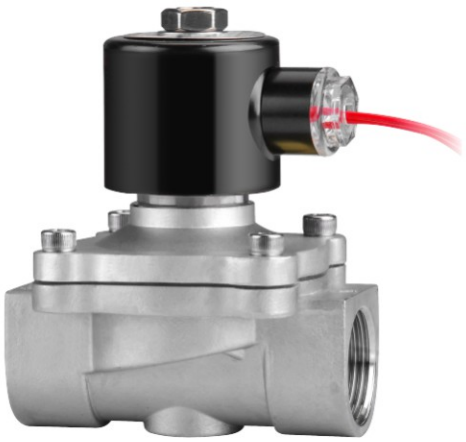

Specifications

Model code	2W025-06B	2W025-08B	2W040-10B	2W160-10B	2W160-15B	2W200-20B	2W250-25B	2W350-35B	2W400-40B	2W500-50B
Symbol										
Fluid Media	Air, Water, Oil, Gas									
Operating Mode	Direct Acting									
Type	Normally Closed									
Orifice	2.5		4	16		20	25	32	40	50
Cv Factor	0.23		0.6	4.8		7.6	12	24	29	48
Pipe Size	1/8″	1/4″	3/8″	3/8″	1/2″	3/4″	1″	1 1/4″	1 1/2″	2″
Viscosity	Under 20 CST									
Operating Pressure	Water:0~7 Air:0~7 Oil:0~5									
Fluids Temp.	-5~80℃									
Available Voltage	± 10% AC220V 110V DC24V Contact the factory for Others									
Body Material	S.S.304 (S.S.316 Special Made)									
Seals Material	NBR or VITON									

Construction External Dimensions Chart

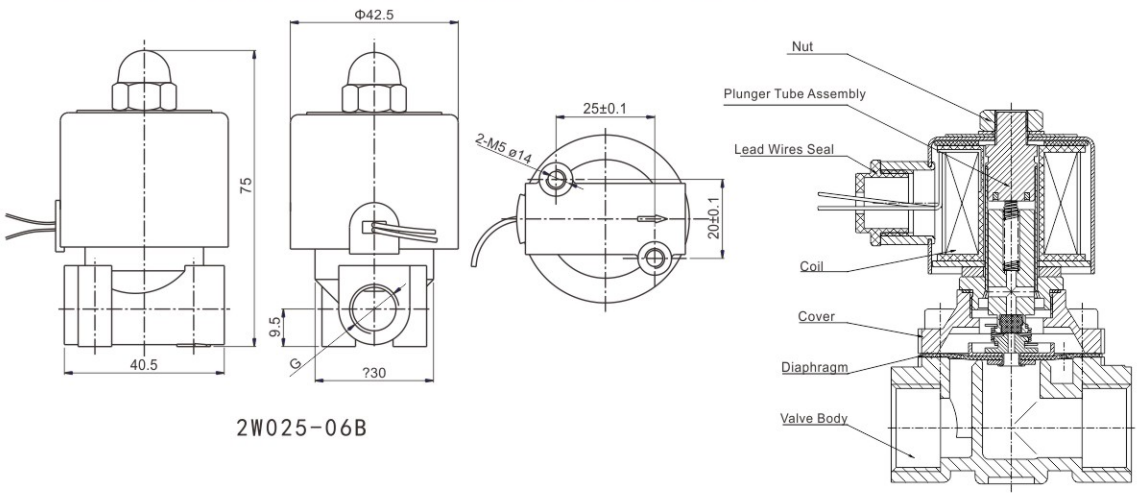

2W025-06B

2W series 2/2-way direct acting solenoid valve · normally closed

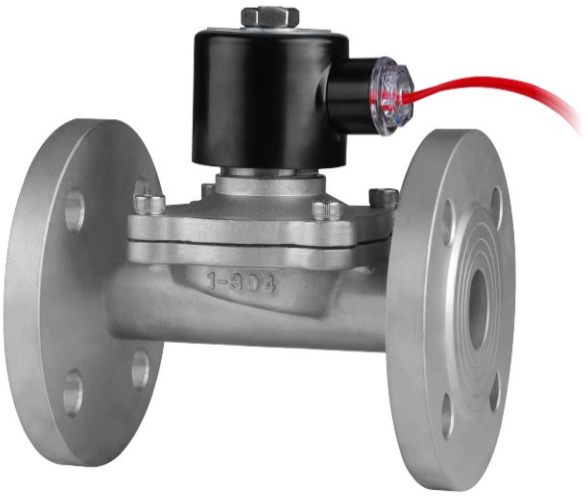

Construction Dimensions Chart

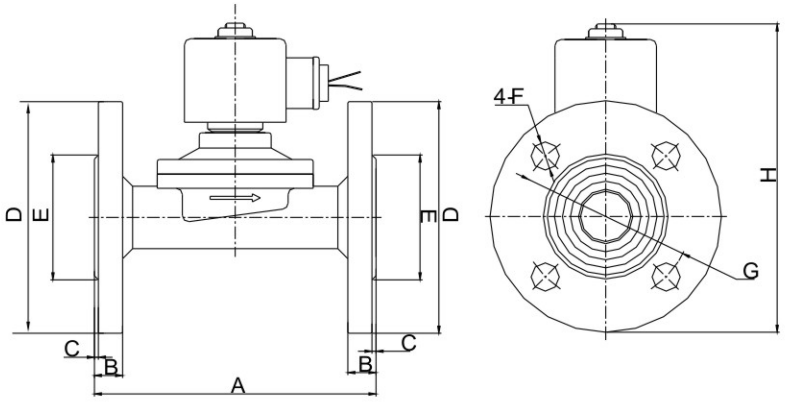

Model	A	B	C	ϕD	ϕE	ϕF	ϕG	H	Weight(KG)
2W160-15FB	108	12	2	95	45	4-14	65	138	1.8
2W200-20FB	108	12	2	102	56	4-14	75	142	2.0
2W250-25FB	140	14	2	115	62	4-14	85	158	2.9
2W350-35FB	152	15	2	135	76	4-18	100	192	5.1
2W400-40FB	152	15	2	145	84	4-18	110	202	6.1
2W500-50FB	195	16	2	160	98	4-18	125	220	8.2

2W series 2/2-way direct acting solenoid valve · normally open

Characteristics

Normally open, open when de-energized,
Closed when energized

Body material: forged brass

They are capable of operating at zero differential pressure

Available voltage:AC110v/220v 50/60Hz DC24v

Voltage tolerance:+10% to -10% DC Voltage tolerance: ± 10%



Inapplicable Fluids

Fluids that will turn to liquid after being heated and become solid after being cooled

Strong corrosive fluids

Fluids that have kinematic viscosity over 20 CST

Attention

Make sure the pipe is clean before installing

Pls fix a Y frame filter in front of the solenoid valve, for longer life-span

Technical Parameter

Model Code	L	H	Pipe Size	Weight (KG)
2W160-10H	69	135	3/8″	1.2
2W160-15H	69	135	1/2″	1.2
2W200-20H	73	142	3/4″	1.3
2W250-25H	99	150	1″	1.7
2W350-35H	112	186	1 1/4″	2.9
2W400-40H	123	197	1 1/2″	3.2
2W500-50H	168	225	2″	4.9

Construction Dimensions Chart

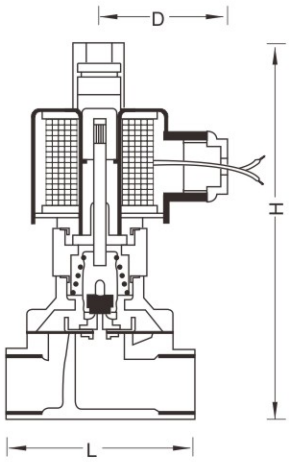

Specifications

Model Code	2W160-10H	2W160-15H	2W200-20H	2W250-25H	2W350-35H	2W400-40H	2W500-50H
Fluid Media	Air, Water, Oil, Gas						
Operating Mode	Direct Acting						
Type	Normally Open						
Orifice	16		20	25	32	40	50
Cv Rating	4.8		7.6	12	24	29	48
Pipe Size	3/8″	1/2″	3/4″	1″	1 1/4″	1 1/2″	2″
Viscosity	blew 20CST						
Operating Pressure	Water:0~5 Air:0~5 Oil:0~5						
Fluids Temp.	-5~80℃						
Available Voltage	± 10%						
Body Material	Forged Brass						
Seals Material	NBR or VITON						

2W series 2/2-way direct acting solenoid valve · normally open

Characteristics

Normally open, open when de-energized,
closed when energized
Body material: forged brass
They are capable of operating at zero differential pressure
Available voltage:AC110v/220v 50/60Hz DC24v
Voltage tolerance:+10% to -10% DC Voltage tolerance: ± 10%



Inapplicable Fluids

Fluids that will turn to liquid after being heated and become solid after being cooled
Strong corrosive fluids
Fluids that have kinematic viscosity over 20 CST

Attention

Make sure the pipe is clean before installing
Pls fix a Y frame filter in front of the solenoid valve, for longer life-span

Technical Parameter (Female Thread)

Model Code	L mm	H mm	Pipe Size	Weight (KG)
2W160-10BH	69	135	3/8″	1.1
2W160-15BH	69	135	1/2″	1.2
2W200-20BH	73	142	3/4″	1.3
2W250-25BH	99	150	1″	1.7
2W350-35BH	112	186	1 1/4″	2.6
2W400-40BH	123	197	1 1/2″	3.3
2W500-50BH	168	225	2″	4.9

Construction Dimensions Chart

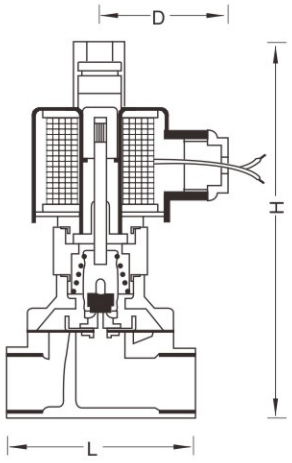

Specifications

Model Code	2W160-10BH	2W160-15BH	2W200-20BH	2W250-25BH	2W350-35BH	2W400-40BH	2W500-50BH
Fluid Media	Air, Water, Oil, Gas						
Operating Mode	Direct Acting						
Type	Normally Open						
Orifice	16		20	25	32	40	50
Cv Rating	4.8		7.6	12	24	29	48
Pipe Size	3/8″	1/2″	3/4″	1″	1 1/4″	1 1/2″	2″
Viscosity	Under 20 CST						
Operating Pressure	Water:0~5 Air:0~5 Oil:0~5						
Fluids Temp.	-5~80℃						
Available Voltage	± 10%						
Body Material	S.S.304						
Seals Material	NBR or VITON						

2W series 2/2-way direct acting solenoid valve · normally open



Construction Dimensions Chart

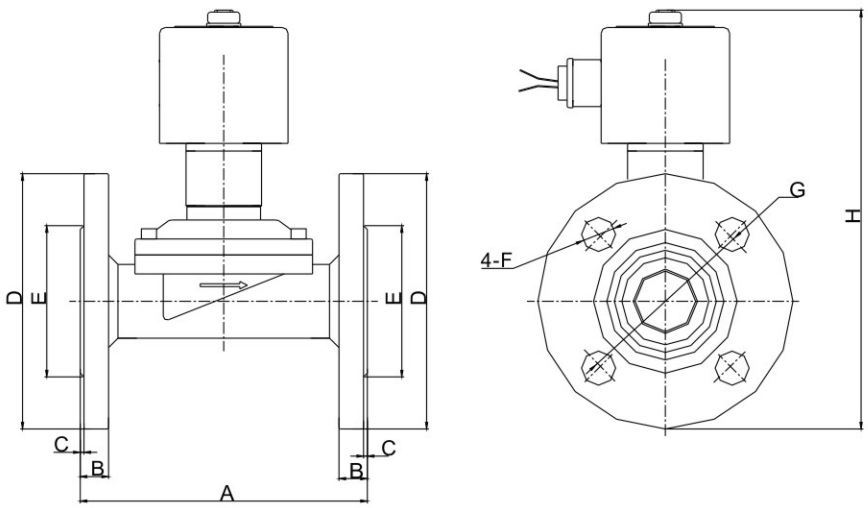

Model	A	B	C	ϕD	ϕE	ϕF	ϕG	H	Weight (KG)
2W160-15FBH	108	12	2	95	45	4-14	65	162	1.95
2W200-20FBH	108	12	2	102	56	4-14	75	165	2.15
2W250-25FBH	140	14	2	115	62	4-14	85	160	3.1
2W350-35FBH	152	15	2	135	76	4-18	100	230	5.4
2W400-40FBH	152	15	2	145	84	4-18	110	240	6.4
2W500-50FBH	195	16	2	160	98	4-18	125	270	8.6

DF series pilot operated liquid solenoid valve

Specifications

1	Max operation pressure: 8bar
2	Operating pressure differential: 0.3-8bar (φ3, φ5Direct acting 0~6 bar)
3	Ambient temperature: -10℃-50℃
4	Fluid media temperature: 0℃-75℃
5	Voltage: AC:380V;220V;36V/50Hz DC:12V;24;110V;220V
6	Insulation class: F class
7	Power consumption: φ5-φ20 12w φ25-φ100 15w φ1255-φ150 30w,
8	Coil temperature rising: -15% - 10%
9	Coil temperature rising: +10% to -10% applicable voltage
10	fluid media: liquids, air, light oil ＜20CST
11	Mounting position: flow as arrow, solenoid vertical and upright direction.
12	Response time: φ3~φ50≤1s Closed≤2s ; φ65~φ150≤3s Closed≤5s



Parameters

Model code	A(mm)	H(mm)	Pipe size(Female Thread)	Body material	Weight(KG)
DF-15	90	105	G 1/2″	Brass	1.0
DF- 20	100	115	G 3/4″		1.2
DF- 25	120	135	G 1″		1.6
DF- 32	135	145	G 1 1/4″		2.1
DF- 40	145	160	G 1 1/2″		2.7
DF- 50	185	180	G 2″		4.3

Construction, external dimensions chart

Normally closed

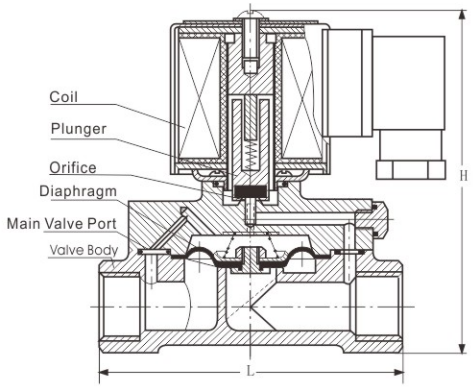

If you want the valve normally open model for example:DF-15H

DF series pilot operated liquid solenoid valve



Construction Dimensions Chart

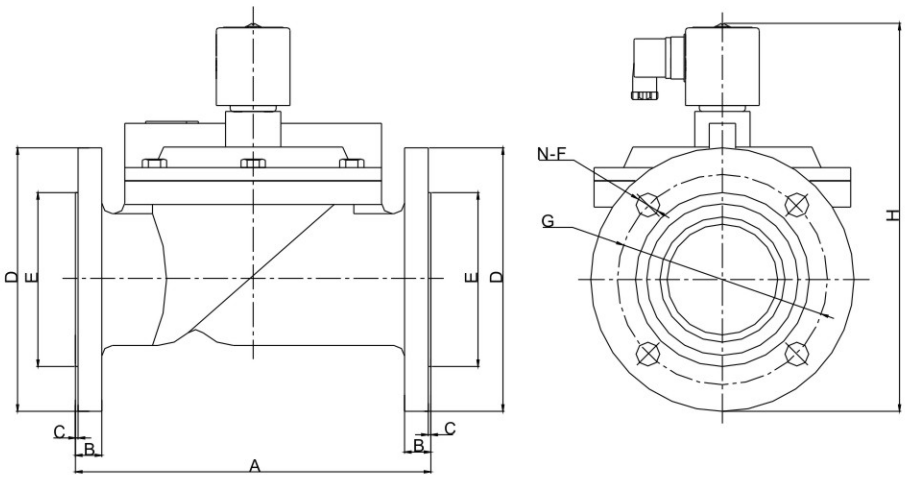

Model	A	B	C	ΦD	ΦE	ΦF	ΦG	H	N	Body Material
DF-40F	155	15	2	150	88	18	110	205	4	Cast Iron
DF-50F	200	16	2	160	88	18	125	220	4	
DF-65F	250	20	3	185	118	18	145	260	4	
DF-80F	270	18	2	200	132	18	160	275	4	
DF-100F	350	20	2	220	160	18	180	310	8	
DF-125F	400	25	3	250	184	18	210	380	8	
DF-150F	450	24	3	285	212	22	240	405	8	

ZQDF general use series solenoid valve · normally closed

Technical parameters

1	Max operation pressure: 8bar
2	Working pressure: 0-8bar
3	Fluid media: fluid, air, steam, and light oil ＜20CST
4	Fluid temp: ≤180℃
5	Voltage: AC:380V;220V;36V/50Hz DC:12V;24
6	Coil class: class H
7	Voltage tolerance -15%- 10%
8	Power consumption: 50w
9	Response time：open≤2sec, closed ≤3sec
10	Mounting position: flow as arrow, solenoid vertical and upright direction. Pure fluids.



Parameters

Model code	L (mm)	H (mm)	Pipe size(Female)	Weight(KG)	Body Material:
ZQDF-15	86	178	G 1/2″	2.6	Brass
ZQDF-20	94	180	G 3/4″	2.7	
ZQDF-25	105	190	G 1″	4.0	
ZQDF-32	115	210	G 11/4″	4.4	
ZQDF-40	130	223	G 11/2″	4.8	
ZQDF-50	150	228	G 2″	5.8	

TEFLON NOTE: standard Teflon, pls advise if you want viton

Construction, external dimension chart

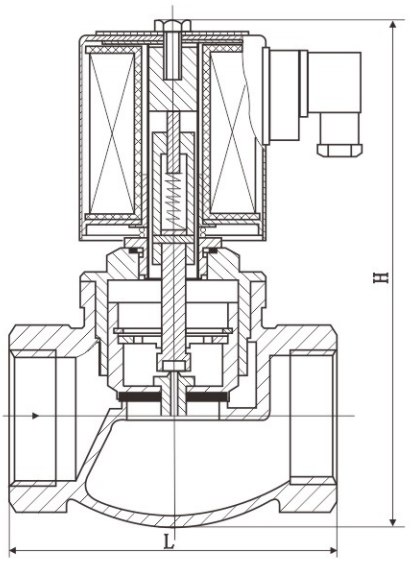

ZQDF general use series solenoid valve · normally closed

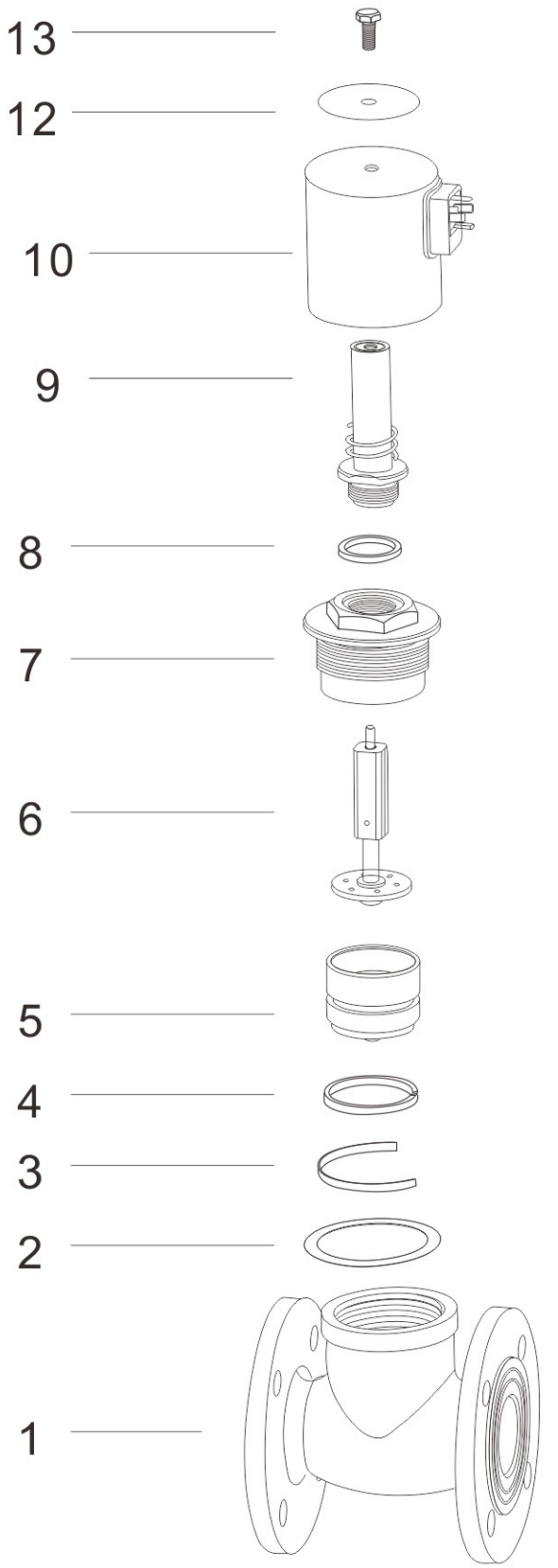



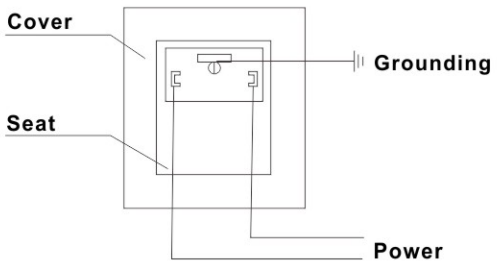

Electric wiring chart

Code	Components
01	Valve body
02	Seals
03	Elastic ring
04	Piston ring
05	Piston assembly
06	Stem assembly
07	Valve cover
08	Plunger tube seals ring
09	Plunger assembly
10	Coil
11	Plug
12	Nameplate
13	Lock nut

ZQDF general use series solenoid valve · normally closed

Technical parameters

1	Max operation pressure: 8bar
2	Working pressure: 0-8bar
3	Fluid media: fluid, air, steam, and light oil＜20cst
4	Fluid temp: ≤180℃
5	Voltage: AC:380V;220V 36V/50Hz DC:24V
6	Coil class: class H
7	Voltage tolerance -15% to +10%
8	Power consumption: 50w
9	Response time：open≤2sec, closed ≤3sec
10	Mounting position: flow as arrow, solenoid vertical and upright direction. Pure fluids.



Parameters

Model code	L (mm)	H (mm)	Pipe size (Female)	Body Material:	Weight(KG)
ZQDF-15B	86	178	G 1/2″	SS304	2.6
ZQDF-20B	94	180	G 3/4″		2.7
ZQDF-25B	105	190	G 1″		3.8
ZQDF-32B	115	210	G 11/4″		4.2
ZQDF-40B	130	223	G 11/2″		4.6
ZQDF-50B	150	228	G 2″		5.7

TEFLON NOTE: standard Teflon, pls advise if you want viton

Construction, external dimension chart

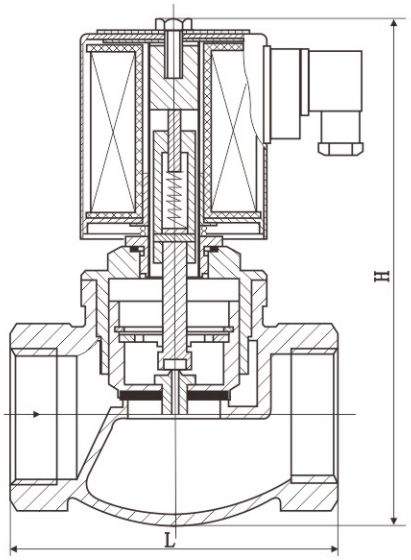

ZQDF general use series solenoid valve · normally closed

Technical parameters

1. Body Material: Brass SS304
2. Working Pressure: 0-8bar
3. Media: Liquid, gas, steam. Oil<20CST
4. Voltage: AC380V 220V 36V/50HZ DC24V etc.
5. Class of insulation: Class H
6. Power: 50W
7. Tolerance for the power supply: -15% ~+10%
8. Mounting position: flow as arrow, solenoid vertical and upright direction,
9. Ifyou want the SS304 body, the model for example : ZQDF-25BF



External Dimension

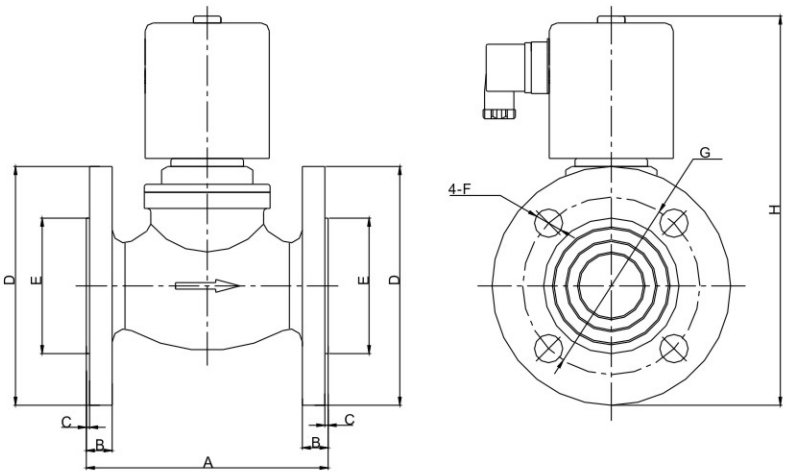

Model	A	B	C	D	E	F	G	H	Weight(KG)
ZQDF-20F	110	12	2	102	56	4-14	75	215	5.2
ZQDF-25F	110	12	2	115	65	4-14	85	215	5.4
ZQDF-32F	126	16	2	140	78	4-18	100	245	5.9
ZQDF-40F	150	16	2	148	84	4-18	110	253	8.5
ZQDF-50F	160	16	2	165	102	4-18	125	268	9.8

ZCZ(ZCZP) series 2/2-way solenoid valve · normally closed

Technical parameters

1	Max Pressure	1.6MPa <1.0MPa>
2	Operting differential pressure	0.05~1.6MPa≥ ϕ65 0.1~1.6MPa <ZCZP Series 0.04~1.0MPa>
3	Media	Liquid, gas, steam, oil<20CST
4	Media Temperature	≤180℃ <200℃
5	Voltage	AC:380V 220V 36V/50Hz DC:24V 110V 220V
6	Coils class	Class H
7	Power supply Tolerance	-15%~ +10%
8	Power	ϕ15~ ϕ50 24W ϕ65~ϕ 150 50W
9	Response Time	ϕ15~ ϕ50 Open≤2s Closed≤3s ϕ65~ ϕ150 Open≤3s Closed≤5s
10	Mounting Position	Flow as arrow, solenoid vertical and upright direction, pure



Construction, external dimension chart

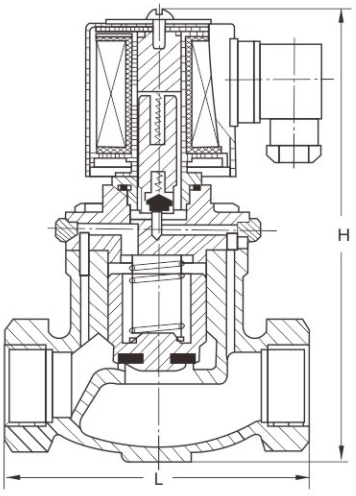

Parameters

Model code	L(mm)	W(mm)	Plpe size (Female Thread)	Body Materlal	Wight(KG)
ZCZ-15	90	150	G 1/2″	Brass	1.3
ZCZ-20	100	160	G 3/4″		1.5
ZCZ-25	115	176	G 1″		2.3
ZCZ-32	140	201	G 11/4″		3.1
ZCZ-40	155	223	G 11/2″		4.4
ZCZ-50	170	230	G 2″		5.9

ZCZ(ZCZP) series 2/2-way solenoid valve · normally closed

Technical parameters

1	Operation pressure: ≤ϕ65：0.5~16bar; ＞ϕ65:1~16bar (ZCZP Series:0.4~10MPa)
2	Fluid media: fluid, air, steam, and light oil<20CST
3	Voltage: AC:380V,220V,36V DC:24V,110V,220V
4	Coil class: class H
5	Voltage tolerance -15% + 10%
6	Power consumption: ϕ20~ ϕ50 24W ; ϕ65~ ϕ150 50W
7	Response time: ϕ20~ ϕ50 Open≤2s Closed≤3s; ϕ65~ ϕ150 Open≤3s Closed≤5s
8	Mounting position: flow as arrow, solenoid vertical and upright direction, pure fluids.



Construction, external dimension chart

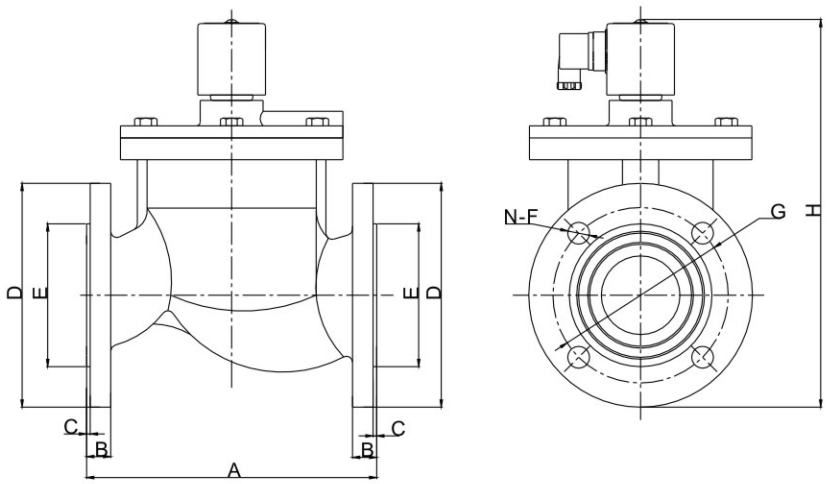

Parameters

Model code	A	B	C	ΦD	ΦE	ΦF	ΦG	H	N	Body material	Weight(KG)
ZCZ-20F	110	12	2	102	56	14	75	185	4	Brass body	2.8
ZCZ-25F	122	14	2	112	65	14	85	202	4		4.9
ZCZ-32F	140	16	2	140	78	18	100	240	4		5.5
ZCZ-40F	150	16	2	148	84	18	110	254	4		7.6
ZCZ-50F	160	17	2	165	102	18	125	265	4		9.1
ZCZ-65F	240	20	3	185	118	18	145	360	4	Cost Iron	——
ZCZ-80F	280	22	3	200	132	18	160	400	8		
ZCZ-100F	320	25	3	220	160	18	180	420	8		
ZCZ-150F	400	28	3	285	212	22	240	570	8		

ZCZ series 2/2-way solenoid valve · normally closed

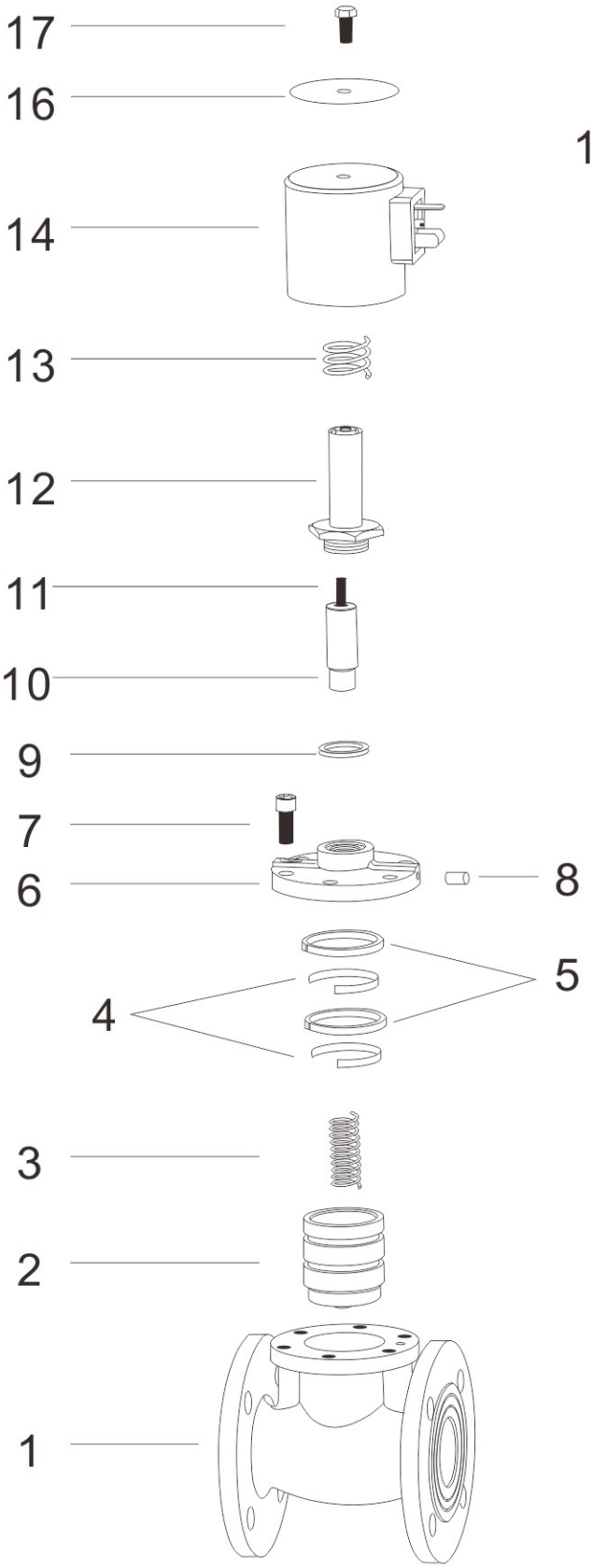

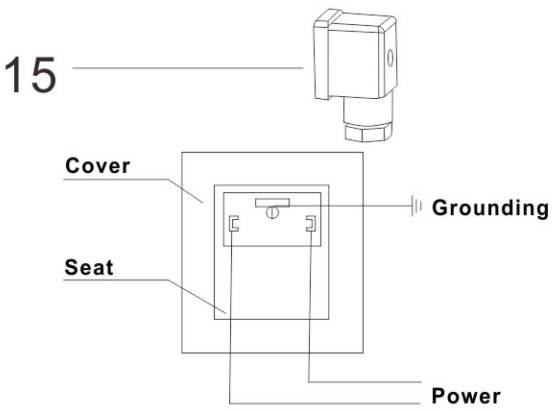

Electric wiring chart

Code	Components
01	Valve body
02	Piston assembly
03	Piston spring
04	Elastic ring
05	Piston ring
06	Valve cover
07	Valves fixed screw
08	core plug
09	Plunger tube seals ring
10	Plunger assembly
11	Plunger spring
12	Plunger tube assemble
13	Coil
14	Coil spring
15	Plug
16	Namplate
17	Lock nut

SLF PTFE solenoid valve

Specification and Features

1. 2 way solenoid valve
2. Body Material: PTFE
3. Media: strong acid, strong base (alkali)
4. Mounting: flow as the arrow, Life is best for growth level installation
5. No leakage



Parameters

Code		SLF-3	SLF-5	SLF-8	SLF-10	SLF-15	SLF-20	SLF-25
Orifice (mm)		3	5.4	8	10	16	21	27.5
Connection		M8×1	G1/4"	G3/8"		G1/2"	G3/4"	G1"
Working Pressure		0~0.2MPa	0~0.4MPa			0.01~0.6MPa		
PIN		1.0MPa						
Medium		strong acid, strong base（gas、liquid）						
Media Temperature		MAX.+80℃						
Ambient Temperature		0~60℃						
Power	AC220V	6	17	17	17	17	17	17
	DC24V	7	17	17	17	17	17	17
Weight KG		0.24	0.45	0.79	0.79	1.12	1.34	1.73

Construction, external

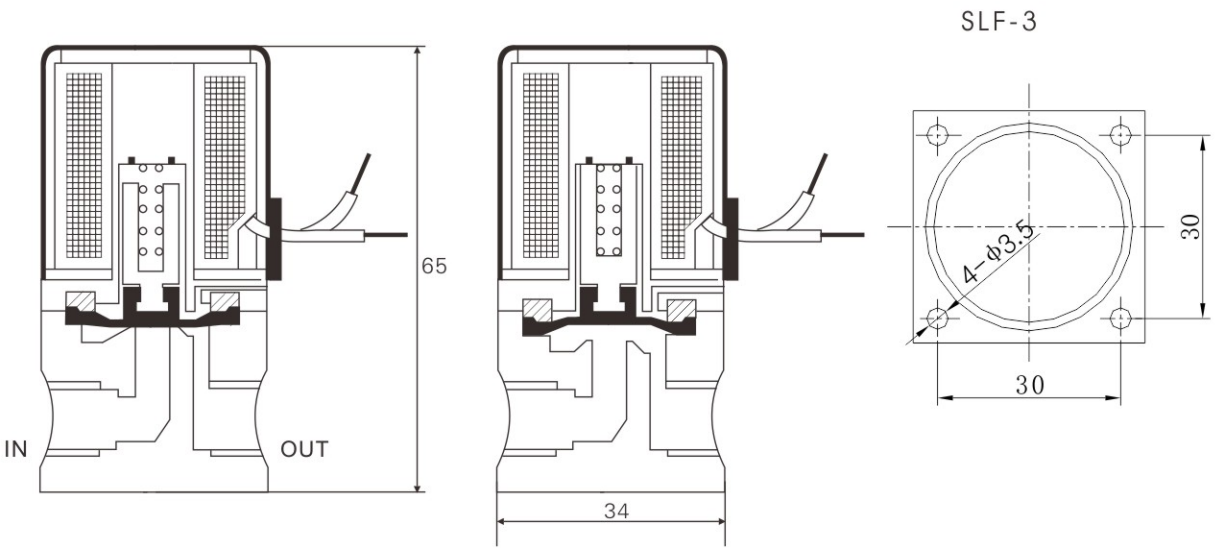

SLF PTFE solenoid valve

Construction, external

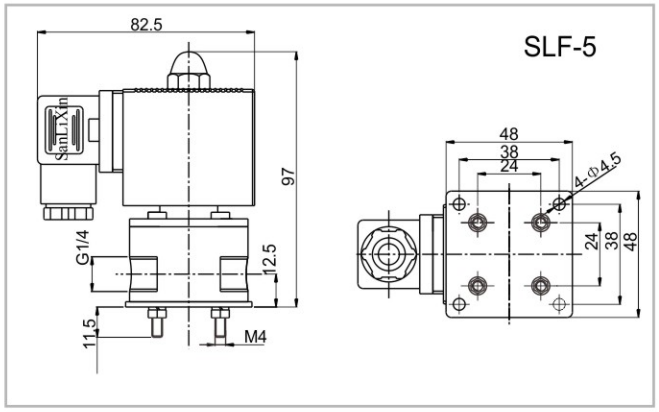

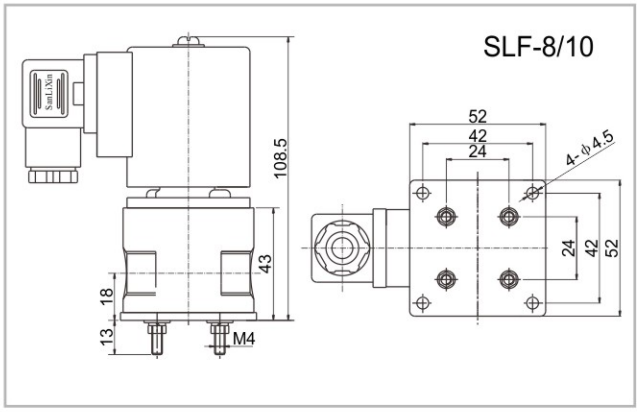

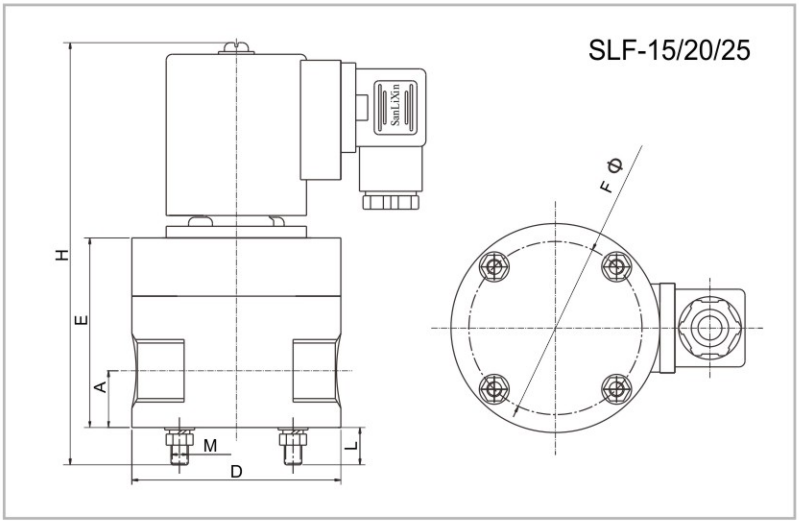

Code	Size						
	D	H	E	A	M	L	F
SLF-15	Φ70	129	63.5	19	M5	12.5	Φ58
SLF-20	Φ80	137	71	20	M6	19	Φ67
SLF-25	Φ95	148	82	29	M6	19	Φ75

SLUF UPVC solenoid valve

Specification:

1.Body Material :UPVC

2.Seal material: AFLAS

3.Isolation structure design, keep the medium separate with the valve body and seals

4.Piston constructure, longer lifetime

5.Soft seal design, no leakage



Parameters

Code		SLUF-15	SLUF-20	SLUF-25	SLUF-32	SLUF-40	SLUF-50
Orifice (mm)		16	19.5	24	32	40	50
Connection		G1/2"	G3/4"	G 1"	G 1 1/4"	G 1 1/2"	G2"
Working Pressure		0.01~0.6MPa					
PIN		1.0MPa					
Body Material		UPVC					
Seal material		AFLAS					
Medium		Weak acid and alkali (Air、liquid)					
Media Temperature		MAX.+50℃					
Ambient Temperature		0~60℃					
Power	AC220V	17			Start 200W，Hold 5W		Start 350W，Hold 10W
	DC24V	17			Start 85W，Hold 25W		Start 85W，Hold 25W
Weight KG		0.80	0.82	0.85	1.4	1.5	2.7

Construction external

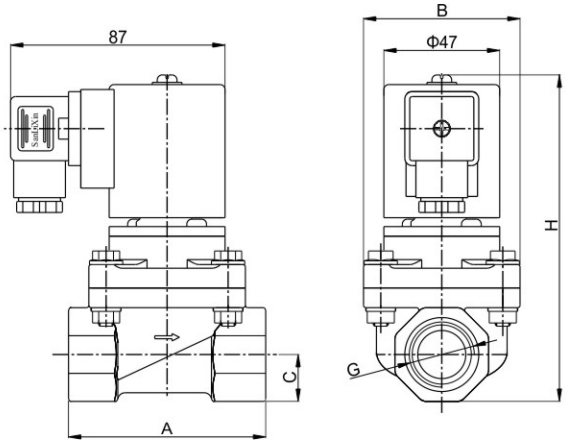

Code	Construction external				
	G	A	B	C	H
SLUF–15	75	63.5	16	127	G1/2"
SLUF–20	80	63.5	19	133	G3/4"
SLUF–25	100	74	24	143	G1"
SLUF–32	120	94	30	171	G1 1/4"
SLUF–40	130	94	32.5	180	G1 1/2"
SLUF–50	172	155	42	225	G2"

SLDF 2/2-way series underwater solenoid valve

Description

SLDF series solenoid valve provides on- off control of fluid media on auto-control system. This series is designed for music fountain and dancing fountain.

SLDF series is direct acting solenoid valve which utilize pressure differential to open the valve. They feature diaphragm construction, and together with rapid on-off, stabile capability, easy use, and long-life.This valve has strong dirty-tight, can be used long time in river lake sea and kinds of made water areas.



Construction Dimensions Chart

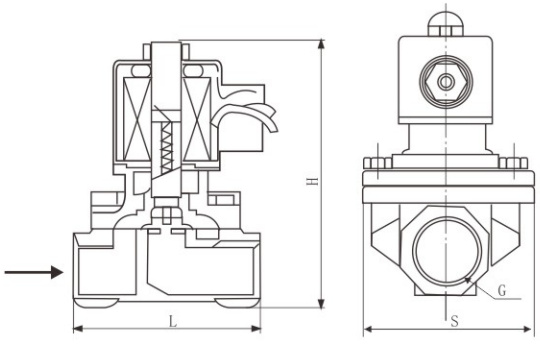

Technical Parameter

1	Ambient Temp.	-10℃~50℃		
2	Operating Pressure	≤ ϕ 50 0~0.6MPa > ϕ 65 0.06MPa~0.5MPa External type: 0.1~2.5MPa		
3	Fluid Media	Water		
4	Fluids Temp.	0℃~60℃		
5	Body Material	Brass、Stainless Steel、Plastic、Iron		
5	Voltage	ϕ 25 above 65	AC 220V 28VA、DC24V 33W	
		ϕ 32/40/50	AC 220V 35VA、DC24V 40W	
6	Coil Class	B Class	Degree of protection	IP68
7	Voltage Tolerance	-10%~+10%		
8	Life-span	200000 Times		
9	Response Times	0、2 Sec		
10	Amounting Position	Flow as the arrow		

Specifications

Model code	L (mm)	H(mm)	Pipe Size	Body material	Weight(KG)
SLDF-15	69	106	G1/2″	Brass	1.0
SLDF-20	73	113	G3/4″		1.1
SLDF-25	99	122	G1″		1.6
SLDF-35	112	148	G1/4″		2.1
SLDF-40	123	158	G1/2″		2.5
SLDF-50	168	174	G2″		4.2
SLDF-15B	69	106	G1/2″	Stainless Steel	0.9
SLDF-20B	73	113	G3/4″		1.0
SLDF-25B	99	122	G1″		1.5
SLDF-35B	112	148	G1/4″		2.0
SLDF-40B	123	158	G1/2″		2.4
SLDF-50B	168	174	G2″		4.1
SLDF-15S	69	108	G1/2″	Plastic	0.55
SLDF-20S	73	115	G3/4″		0.57
SLDF-25S	99	121	G1″		0.67

SLDF 2/2-way series underwater solenoid valve

Flange structure size

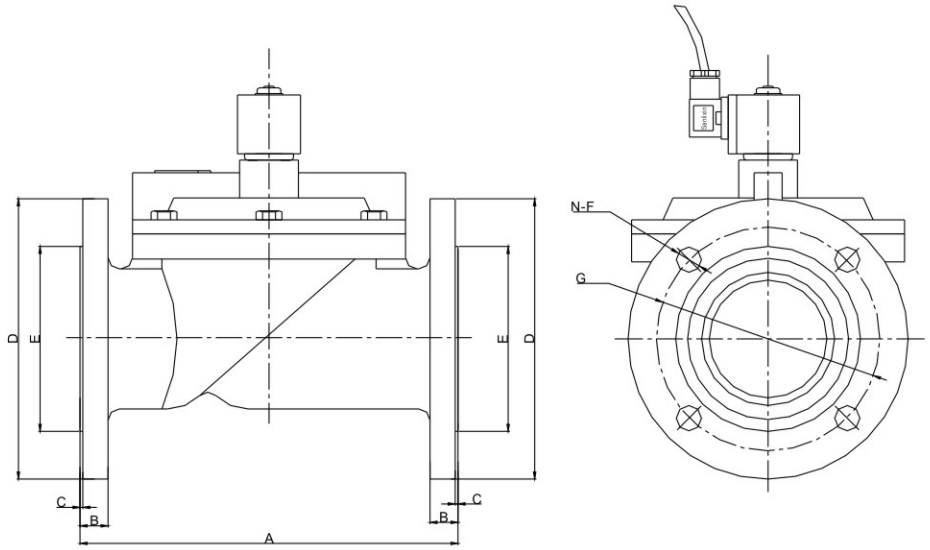

Model code	A	B	C	D	E	F	G	N	Body Material
SLDF-65F	250	20	2	185	118	18	145	4	Cast Iron
SLDF-80F	270	20	2	200	132	18	160	4	
SLDF-100F	350	20	3	220	160	18	180	8	
SLDF-150F	450	24	3	285	212	22	240	8	

Flange structure size

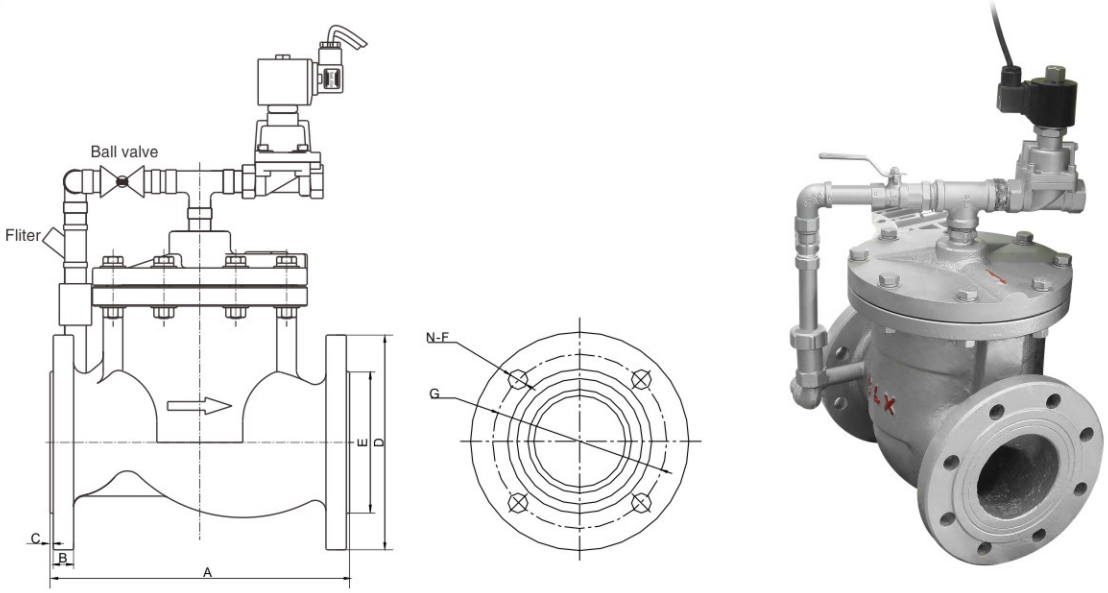

Model code	A	B	C	D	E	F	G	N	Body Material
SLDF–65FW	240	20	3	185	118	18	145	4	Cast Iron
SLDF–80FW	280	22	3	200	132	18	160	8	
SLDF–100FW	320	25	3	220	160	18	180	8	
SLDF–150FW	400	28	3	285	212	22	240	8	

ZCM zero pressure differential gas solenoid valve

Using

This series valve provide on-off control coal gas, natural gas, and other combustion fluid media, they also can control other low pressure fluids

Characteristics

- 1 Special construction, low pressure
- 2 They are capable of operating at zero pressure differential, and have large flow.
- 3 Use high quality seals, no leaking.
- 4 Best position is solenoid vertical and upright direction,Flow as the arrow.
- Explosion- proof coil and be fitted (for orifice under 25MM only)
- Explosion-proof certification NO.:XK06-014-01861 Refer to standard: GB3836. 1-2010、GB3836. 9-2006
- Ex-proof 3C certificate number: 2020312307000034



External Dimensions Chart

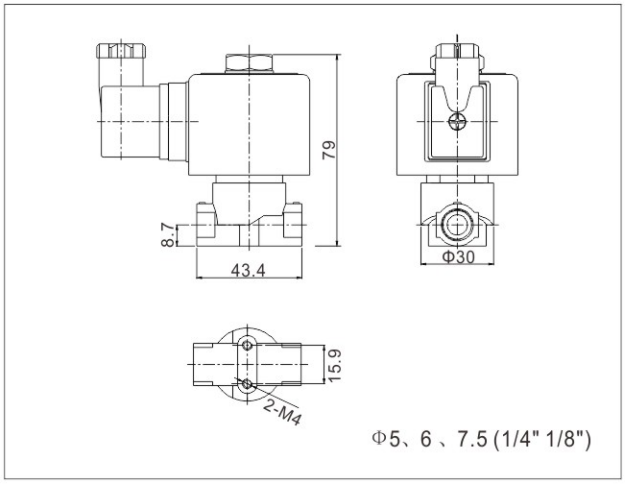

Φ5、6 、7.5 (1/4" 1/8")

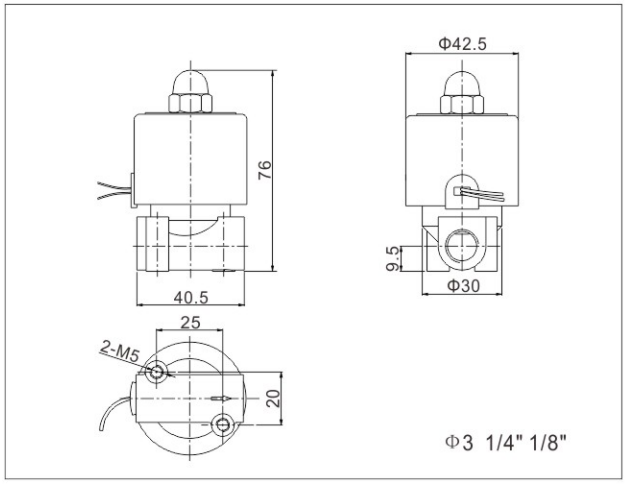

Φ3 1/4" 1/8"

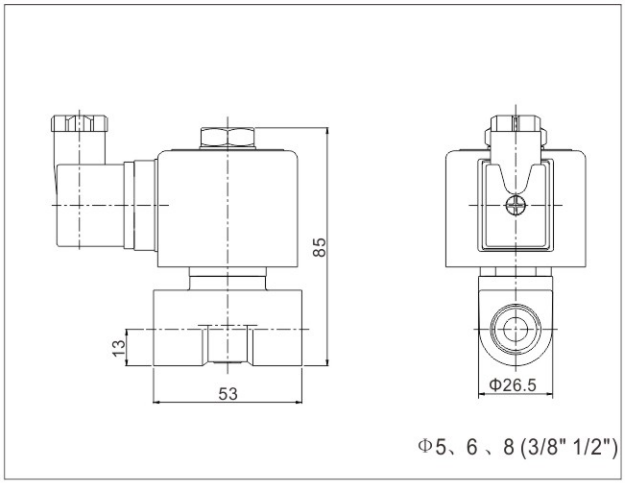

Φ5、6 、8 (3/8" 1/2")

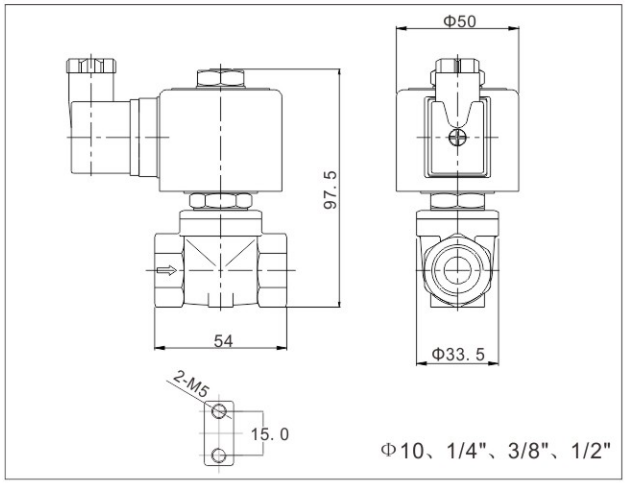

Φ10、1/4"、3/8"、1/2"

ZCM zero pressure differential gas solenoid valve

Parameters

Orifice（mm）	3	5	6	8	10	15	20	25	32	40	50	65	80	100
CV Factor	0.3	0.6	0.7	1.0	1.7	4.6	7.6	12	20	28	46	65	80	115
Max. kgf/cm^2	5	3	2.5	0.5	0.3	2.5			2.5			2.5		
Fluid Media	Coal Gas\Natural Gas\Other Normally Gas and Fluids etc													
Seals	NBR / VITON													
Fluid Temp	-5~+60℃													
Voltage	AC:220V 110V 36V 24V DC:24V 12V													
Power Consumption	25W								50W					

SLP Series Coils Characteristics List（Small size direct acting Normally Closed）

Model	Orifice mm	Pipe size	L(mm)	H(mm)	Body Material	Brass Weight (KG)	SS Weight (KG)
ZCM-3	3	1/8”	40	83	Brass Stainless Steel	0.48	0.48
ZCM-3	3	1/4”	40	83		0.62	0.62
ZCM-5	5	1/8”	43.4	80.5			
ZCM-5	5	1/4”	43.4	80.5			
ZCM-5	5	3/8”	53	87			
ZCM-5	5	1/2”	53	87			
ZCM-6	6	3/8”	53	87			
ZCM-6	6	1/2”	53	87			
ZCM-8	7.5(8)	3/8”	53	87			
ZCM-8	7.5(8)	1/2”	53	87			
ZCM-10	10	3/8”	54	97.5		0.62	———
ZCM-10	10	1/2”	54	97.5			
ZCM-15	15	1/2”	69	106		0.9	0.8
ZCM-20	20	3/4”	73	113		1.0	1.1
ZCM-25	25	1”	99	122		1.54	1.5
ZCM-32	32	1 1/4”	112	148		2.23	2.3
ZCM-40	40	1 1/2”	123	158		2.7	2.9
ZCM-50	50	2”	168	174		4.4	4.7

ZCM zero pressure differential gas solenoid valve

Construction&Extemal Dimension Chart(large size)

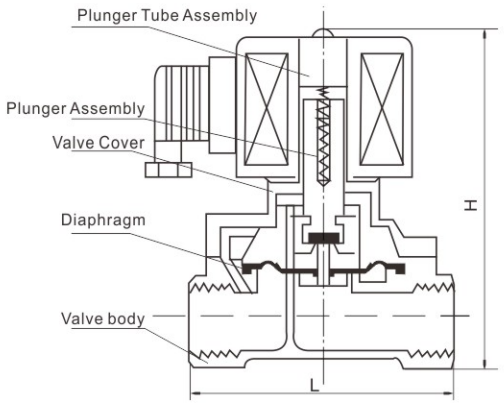

"E" : If you want the EX-PROOF coil please tell us



Construction&Extemal Dimension Chart(large size:flange)

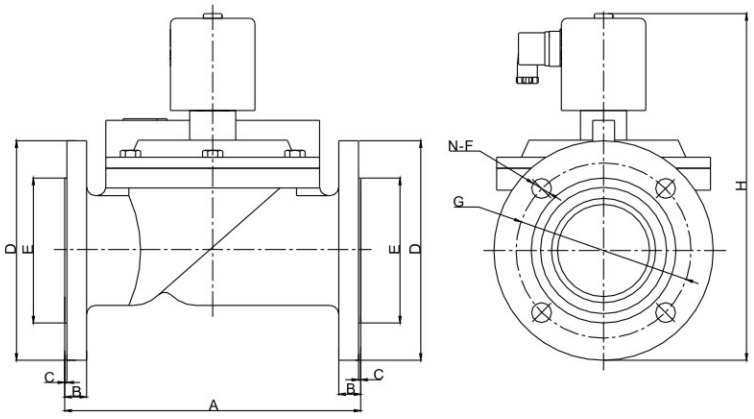

Parameters

Model	A	B	C	ΦD	ΦE	ΦF	ΦG	H	N	Body	Weight(KG)
ZCM-40F	155	15	2	150	88	18	110	210	4	Cast Iron	———
ZCM-50F	200	16	2	160	88	18	125	228	4		
ZCM-65F	250	20	3	185	118	18	145	290	4		
ZCM-80F	270	18	2	200	132	18	160	310	4		
ZCM-100F	350	20	2	220	160	18	180	350	8		
ZCM-65BF	250	19	3	185	118	18	145	308	4	SS304	15.2
ZCM-80BF	270	19	3	202	134	18	160	320	4		18
ZCM-100BF	342	21	3	222	162	18	180	345	8		23.5

SLPM 2/2-way latching solenoid valve

Characteristics

- This series valve is famous for sensitive reaction and high pressure.
- Usually be used to circuit control board connection, it's good for energy saving.
- Widely used to IC card gas combustion meter, water saving irrigation, water meter and various automatism sanitation.
- The core of the valve can be pulled and stretched to be the good shape, with good strictness, credibility, sensitive reaction and long life-spen.

DC pulsetype: reverse polarity to switch open/close

- Voltage: DC6V/DC12V/DC24V
- Seals: NBR, VITON, EPDM
- Valve body: Brss ss304
- Pulse:Wid+h: 50~80ms



Using Condition

Fluid Media: Water, Gas(but not corrosive)
Fluids Temp.:≤60℃,Pls use at the area which relative Temp. can not over then 85%

Olenoid Valves Model Numbering System for Order

	1	2	3	4	5	6	7	8	9	10
	Valve Series	Mode of Operation	Coil Type	Coil Class	voltage	Seal Material	Body Material	Pipe Size	Orifice (mm)	Options
E.G.	SLPM	1	D	F	12	N	1	D	15	
		1= Normally Closed	D=DIN Standard Connections, Fully Encapsulated	F= F class	12= DC12V 13= DC24V 18= DC6V	N= NBR V= VITON E= EPDM	1= Brass 3= SS316	A=1/8" B=1/4" C=3/8" D=1/2" E=3/4" G=1" H=11/4" J=11/2" K= 2"	02=2.0 C3=2.5 03=3.0 C4=3.5 10=10.0 13=13.0 20=20.0 25=25.0 35=35.0 40=40.0 50=50.0	L=Neon Lamp N=NPT Thread

SLPM 2/2-way latching pulse solenoid valve

Valve Seleetion List

Pipe size	orifice mm	CV rate	Pressure (Kgf/cm^2)			Max Fuids Temp ℃	Coil Type	Coil Class	Resistance Ω	External Dimensions A × B × H	Model code Voltage DC12V	Weight (KG)
			Min	Max								
				air	Water							
1/8"	2	0.14	0	10	10	80	D	F	12.5	40×30×80	SLPM1DF12N1A02	0.37
	2.5	0.23	0	9	9	80	D	F	12.5	40×30×80	SLPM1DF12N1AC3	
	3	0.3	0	8	8	80	D	F	12.5	40×30×80	SLPM1DF12N1A03	
	3.5	0.4	0	6	6	80	D	F	12.5	40×30×80	SLPM1DF12N1AC4	
1/4"	2	0.14	0	10	10	80	D	F	12.5	40×30×80	SLPM1DF12N1B02	0.36
	2.5	0.23	0	9	9	80	D	F	12.5	40×30×80	SLPM1DF12N1BC3	
	3	0.3	0	8	8	80	D	F	12.5	40×30×80	SLPM1DF12N1B03	
	3.5	0.4	0	6	6	80	D	F	12.5	40×30×80	SLPM1DF12N1BC4	
3/8"	3	0.3	0	8	8	80	D	F	12.5	40×30×80	SLPM1DF12N1C03	0.46
	3.5	0.4	0	6	6	80	D	F	12.5	40×30×80	SLPM1DF12N1CC4	
	10	4.5	0.5	16	16	80	D	F	12.5	66×48×112	SLPM1DF12N1C10	0.8
1/2"	13	4.5	0.5	16	16	80	D	F	12.5	66×48×112	SLPM1DF12N1D13	0.7
3/4"	20	7.6	0.5	16	16	80	D	F	12.5	75×58×118	SLPM1DF12N1E20	0.9
1"	20	7.6	0.5	16	16	80	D	F	12.5	81×58×119	SLPM1DF12N1G20	1.1
	25	12	0.5	16	16	80	D	F	12.5	96×70×131	SLPM1DF12N1G25	1.4
1 1/4"	32	22	0.5	16	16	80	D	F	12.5	125×96×135	SLPM1DF12N1H32	2.1
	35	22	0.5	16	16	80	D	F	12.5	131×96×146	SLPM1DF12N1H35	2.8
1 1/2"	40	30	0.5	16	16	80	D	F	12.5	131×96×146	SLPM1DF12N1J40	2.7
2"	40	30	0.5	16	16	80	D	F	12.5	136×96×152	SLPM1DF12N1K40	3.1
	50	48	0.5	16	16	80	D	F	12.5	165×120×167	SLPM1DF12N1K50	4.0

External Dimensions

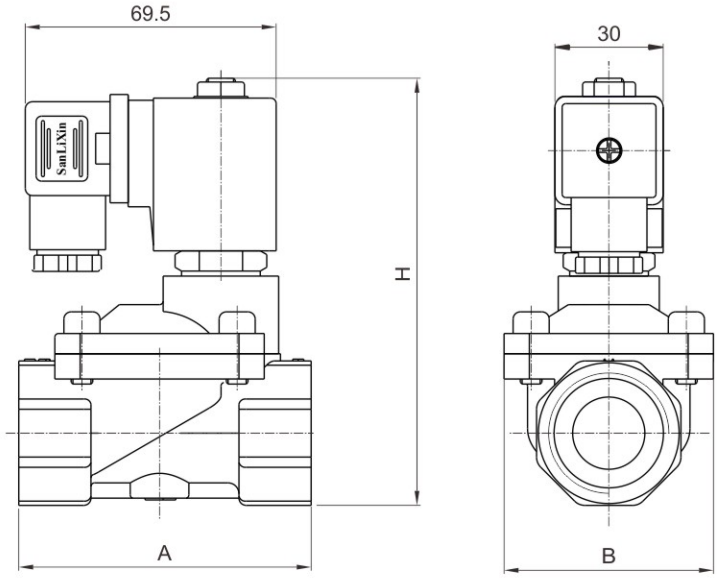

SLW 2/2-way direct acting small type solenoid valve · normally closed

- SLW series normally closed
- Closed when de-energized open , open when energized
- Body material: Brass、Stainless steel、Plastic
- Response time: 10-20ms
- Seals: NBR or VITON or EPDM
- Media: pure water, air
- Max working pressure: 30 bar
- Fluid temp: 0-100 ℃ Ambient temp: -10~+40℃
- Voltage ： AC220V 110V 24V 50/60HZ DC24V DC12V
- Flow as the arrow, mounts in any position;
  best position is solenoid vertical and upright direction.



Solenoid Valves Model Numbering System for Order

	1	2	3	4	5	6	7	8	9	10
	Valve Series	Mode of Operation	Coil Type	Coil Class	voltage	Seal Material	Body Material	Pipe Size	Orifice (mm)	Options
E.G.	SLW	1	W	B	02	N	9	A	02	N
		1= Normally closed	D=DIN Standard Connections, Fully Encapsulated W: metallic housing Lead wires	F: F Class B: B Class	02=220VAC 01=110VAC 05=24VAC 13=DC24V 12=DC12V	N=NBR E=EPDM V=VITON	9= brass 5=S.S.	A=1/8" M=M5	C1=1.2 C2=1.5 02=2.0 C3=2.5 03=3.0	N=NPT Connection
							1= Froged brass	A=1/8" B=1/4″		
							7= Plastic	A=1/8" B=1/4″	C3=2.5	

External Dimensions

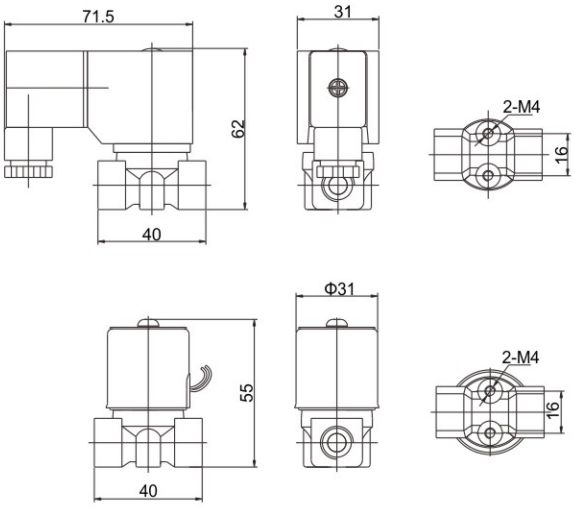

Body 1

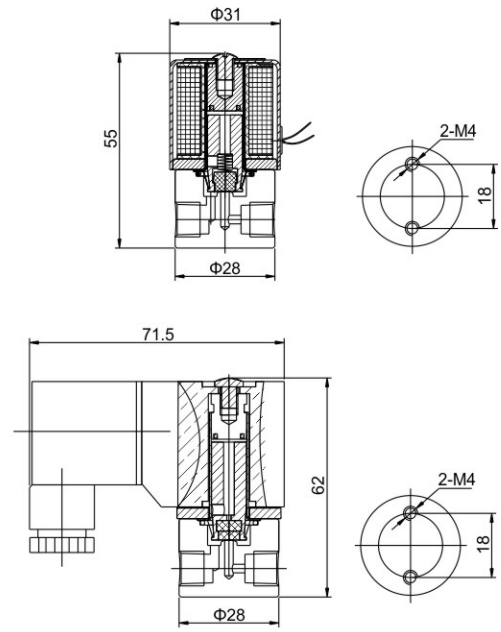

Body 9、5

SLW 2/2-way direct acting small type solenoid valve · normally closed

Valve Seleetion List

Pipe size	Orifice mm	CV rate	Pressure (kgf/cm²)		Max Fuids Temp ℃	Coil Type	Power		Coil class	Model Code Follows Voltage are 220V AC Seal material:NBR		Weight (KG)
			Min	max air Water			VA AC 220V	W DC 24V		Brass	Stainless steel	
1/8"	1.2	0.05	0	30	80	W	9	6.5	B	SLW1WB02N9AC1	SLW1WB02N5AC1	0.21
		0.05	0	30	80	D	9	6.5	F	SLW1DF02N9AC1	SLW1DF02N5AC1	0.26
	1.5	0.08	0	21	80	W	9	6.5	B	SLW1WB02N9AC1	SLW1WB02N5AC1	0.21
		0.08	0	21	80	D	9	6.5	F	SLW1DF02N9AC2	SLW1DF02N5AC2	0.26
	2.0	0.14	0	16	80	W	9	6.5	B	SLW1WB02N9A02	SLW1WB02N5A02	0.21
		0.14	0	16	80	D	9	6.5	F	SLW1DF02N9A02	SLW1DF02N5A02	0.26
	2.5	0.23	0	8	80	W	9	6.5	B	SLW1WB02N9AC3	SLW1WB02N5AC3	0.21
		0.23	0	8	80	D	9	6.5	F	SLW1DF02N9AC3	SLW1DF02N5AC3	0.26
	3.0	0.3	0	6	80	W	9	6.5	B	SLW1WB02N9A03	SLW1WB02N5A03	0.21
		0.3	0	6	80	D	9	6.5	F	SLW1DF02N9A03	SLW1DF02N5A03	0.26
M5	1.2	0.05	0	30	80	W	9	6.5	B	SLW1WB02N9MC1	SLW1WB02N5MC1	0.22
		0.05	0	30	80	D	9	6.5	F	SLW1DF02N9MC1	SLW1DF02N5MC1	0.27
	1.5	0.08	0	21	80	W	9	6.5	B	SLW1WB02N9MC2	SLW1WB02N5MC2	0.22
		0.08	0	21	80	D	9	6.5	F	SLW1DF02N9MC2	SLW1DF02N5MC2	0.27
	2.0	0.08	0	16	80	W	9	6.5	B	SLW1WB02N9M02	SLW1WB02N5M02	0.22
		0.08	0	16	80	D	9	6.5	F	SLW1DF02N9M02	SLW1DF02N5M02	0.27



External Dimensions

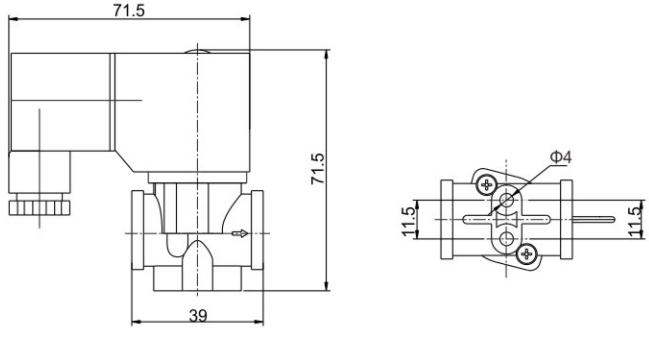

Class 7 plastic body

Valve Seleetion List

Pipe size	Orifice mm	CV rate	Pressure (PSI)		Max Fuids Temp ℃	Coil Type	Power		Coil class	Model Code Follows Voltage are 220V AC	Weight (KG)
			Min	max			VA AC 220V	W DC 24V			
1/8"	2.5	0.21	0	120	100	D	9	6.5	F	SLW1DF13E7AC3N	0.17
1/4"	2.5	0.31	0	120	100	D	9	6.5	F	SLW1DF13E7BC3N	0.17

SLW 2/2-way direct acting small type solenoid valve · normally closed

- SLW series 2/2-way solenoid valve,closed when de-energized,open when energized.
- Serialized products,small size, large flow rate.
- Body material: Brass / Plastic
- Open & closed response time:6~20ms
- Seal material: NBR(standard) EPDM(100℃)
- Media:clean water,air
- Media temp.: 0~80℃ Ambier temp.:-10℃~+40℃
- Voltage: AC220V 110V 24V 50/60HZ DC24V 12V
  Voltage tolerence: -10%~+10%



0.16kg

Solenoid Valve Numbering System for Order

	1	2	3	4	5	6	7	8	9
	Valve Series	Mode of Operation	Coil Type	Coils Class	Voltage	Seal Material	Body Material	Pipe Size	Orifice mm
E.G.	SLW	1	W	B	02	N	1	Y	02
		1= Normally Closed	W=Metallic Housing Lead Wires D=DIN Standard Connections, Fully Encapsulated	B: B Class F: F Class	02=220VAC 01=110VAC 05=AC24V 13=DC24V 12=DC12V	N=NBR E=EPDM V=VITON	1=Brass 7=Plastic	tube plug-type see picture	C2=1.5 02=2.0 C3=2.5 03=3.0

External Dimensions Chart

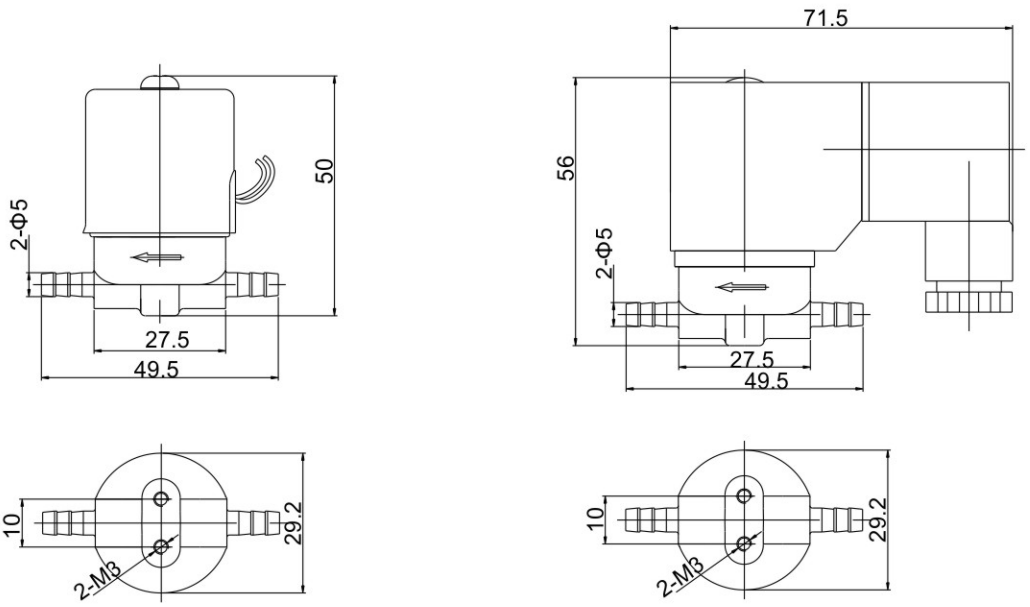

1 Beass

SLW 2/2-way direct acting small type solenoid valve · normally closed

External Dimensions Chart



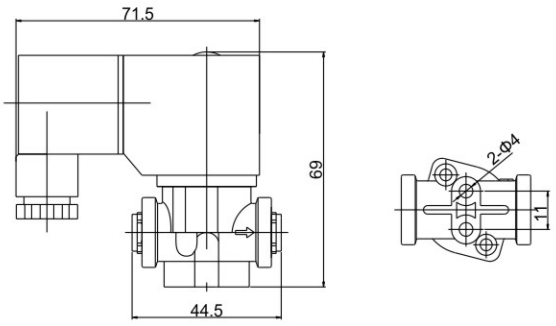

7 Plastic

Valve Seleetion List

Orifice mm	CV rate	Pressure (kgf/cm²)		Max Fuids Temp ℃	Coil Type	Power		Coil class	Model Code Follows Voltage are 24V DC	Weight (KG)
		Min	Max			VA AC 220V	W DC 24V			
1.5	0.07	0	17	80	W	9	6.5	B	SLW1WB13E1YC2	0.16
	0.07	0	17	80	D	9	6.5	F	SLW1DF13E1YC2	0.21
2.0	0.14	0	13	80	W	9	6.5	B	SLW1WB13E1Y02	0.16
	0.14	0	13	80	D	9	6.5	F	SLW1DF13E1Y02	0.21
2.5	0.21	0	8	80	W	9	6.5	B	SLW1WB13E1YC3	0.16
	0.21	0	8	80	D	9	6.5	F	SLW1DF13E1YC3	0.21
	0.21	0	8	100	D	9	6.5	F	SLW1DF13E7YC3	0.17
3.0	0.23	0	6	80	W	9	6.5	B	SLW1WB13E1Y03	0.16
	0.23	0	6	80	D	9	6.5	F	SLW1DF13E1Y03	0.21

SLPW 2/2-way low power solenoid valve · normally closed

Closed when de-energized.
Lower power consumption, low temperature rising.



Body material: brass, ss316
Seals: NBR, VITON
Fluid media: only for air or inert gas.
Operating pressure:0-9bar
Media temperature:0~+65℃
Ambient temperate:0~+60℃

Ed100% , F class.
Important: if the current leakage of system is more than 7ma, the
Solenoid valve will not operate properly.
Eg: 24vdc, 18awg multi-core wire
Rated voltage24vdc, longest wiring length: 6 meters, max loop resistance 88Ω
Rated voltage24vdc, longest wiring length: 4.5 meters, max loop resistance 64Ω
Rated voltage24vdc, longest wiring length: 2.8 meters, max loop resistance 41Ω
Rated voltage24vdc, longest wiring length: 1.1 meters, max loop resistance 17Ω

Standard voltage：24vdc 12vdc
Voltage tolerance:-10%~+10%
Power consumption 1.4w
Standard coil: lead wires (n)
Mounting: mounts in any position; best position is solenoid vertical
And upright direction.

Normally Closed



Solenoid Valve Numbering System for Order

	1	2	3	4	5	6	7	8	9
	Valve Series	Mode of Operation	Coil Type	Coil Class	Voltage	Seal Material Body Material	Pipe Size	Orifice	Options
E.G.	SLPW	1	N	F	13	N1	E	20	
	Valve Series	1= Normally Closed	N= Lead wires Low power Encapsolated	F= F class Coil	12=DC12V 13=DC24V	N= NBR E=EPDM V=VITON	A= 1/8"	02=2.0	N=NPT Thread
							B= 1/4"		
							C= 3/8"	13=13.0	
						1= Forged Brass	D=1/2"		
							E= 3/4"	20=20.0	
							G= 1"	25=25.0	

SLPW 2/2-way low power solenoid valve · normally closed

Valve slection list

Connection	Orifice (mm)	CV Factor	Operating Pressure kgf/cm²		Low Temp ℃	External Dimension			Model Code DC24V	Weight (KG)
			Min	Max Air Inert Gas		L	W	H	Brass	
1/8″	2.0	0.14	0	9	65	40	29	83	SLPW1NF13N1A02	0.37
1/4″	2.0	0.14	0	9	65	40	29	83	SLPW1NF13N1B02	0.37
3/8″	13	4.5	0.5	9	65	68	48	108	SLPW1NF13N1C13	0.7
1/2"	13	4.5	0.5	9	65	68	48	108	SLPW1NF13N1D13	0.7
3/4"	20	7.6	0.5	9	65	75	58	112	SLPW1NF13N1E20	0.9
1"	20	7.6	0.5	9	65	81	58	120	SLPW1NF13N1G20	1.1
	25	12	0.5	9	65	96	70	125	SLPW1NF13N1G25	1.4

External Dimension

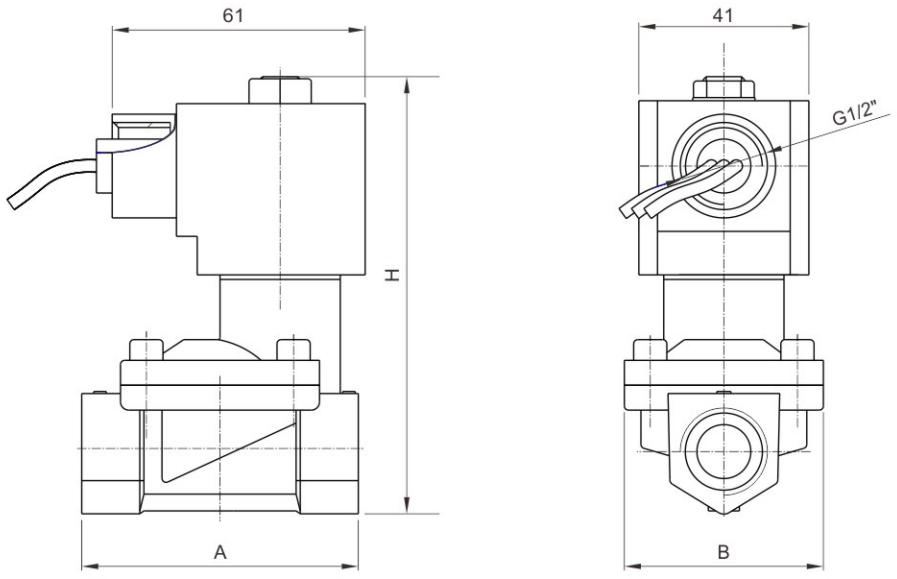

SLB 2/2-way high (low) temperature solenoid valve · normally closed

- SLB series solenoid valve it is serialized products, large flow rate,good applicability.widely used in steam, oil and the other high & low temperqture linquid control.
- Adopted high temperature resistance seal material-PTFE(which material import),when the media passage the properties is good.
- Coils type: high temperature resistance coil meanwile has the heat conduction protection.
- Ensure the long life time and high reliability.



Main Technical Parameters

1. 2/2-way solenoid valve, closed when de-energized,open when energized.
2. Main material: body: forged brass component:stainless steel
3. Seal material: teflon
4. Ambiet temp.:-20~65℃
5. Operating pressure:0~50.0kgf/cm^2
6. Media temp.:low temp.: -100℃~-10℃ high temp.:99℃~200℃
7. Media: high temperature:steam, heat conducting oil and so on
   low temperature:n_2 , o_2, co_2
   attenation:under the naturature temperature,such as air,water and the other media, please choose the other economy & suitable solenoid valve.
8. Voltage: ac24v/110v240v/230v 50/60hz dc12v/24v
   power consumption: ac27va (16w) dc24w
   voltage tolerance:-10%~+10%
   coils type: w (normal) a=din standard,metallic housing
   safty series: class h heat resistance coil, ip 65
9. Install: flow as the arrow,solenoid vertical and upright direction.if media has the eranule impurity,please install more than 60 mesh filter.

Normally Closed



External Dimensions

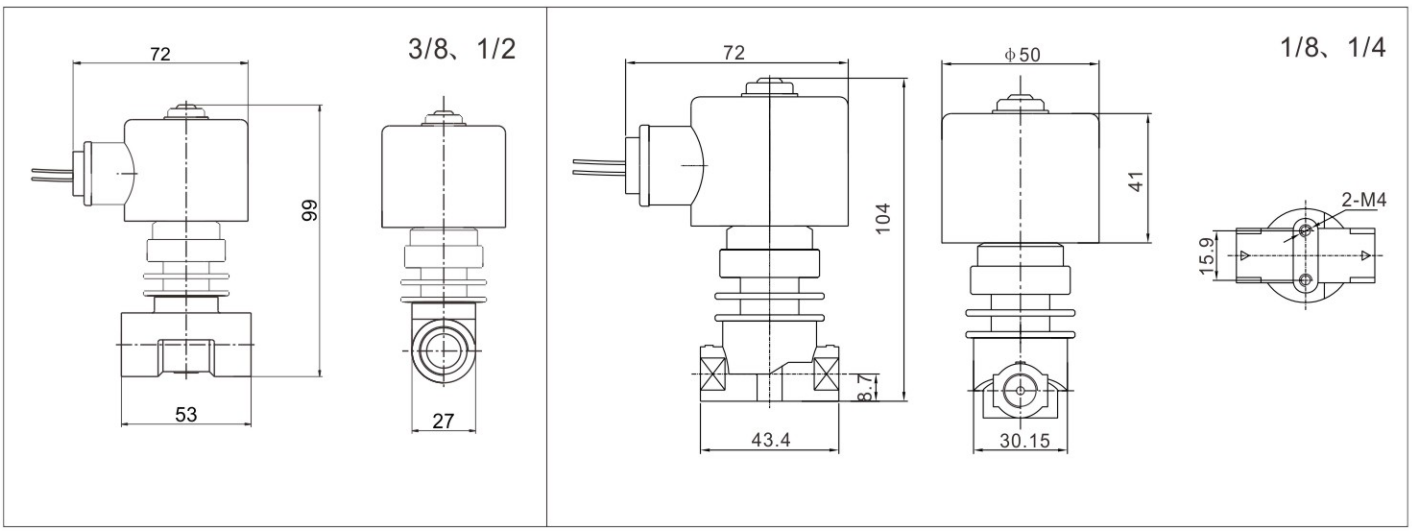

SLB 2/2-way high (low) temperature solenoid valve · normally closed

Valve Slection List

Connection	Orifice (mm)	CV Factor	Operating Pressure kgf/cm²			Fluid temp		Coil Type	Model Code AC220V	N.W. (Kg)
			Min	Max		Low Temp ℃	Steam ℃		TEFLON+Forged Brass	
				Low Temp	Steam					
1/8"	1.5	0.08	0	50	30	-100~ -10	99~200	W	SLB1WH02T1AC2	0.6
1/8"	2.0	0.14	0	30	20	-100~ -10	99~200	W	SLB1WH02T1A02	0.6
1/8"	2.5	0.23	0	17	17	-100~ -10	99~200	W	SLB1WH02T1AC3	0.6
1/8"	3.0	0.3	0	13	13	-100~ -10	99~200	W	SLB1WH02T1A03	0.6
1/8"	4.0	0.6	0	7	7	-100~ -10	99~200	W	SLB1WH02T1A04	0.6
1/4"	1.5	0.08	0	50	30	-100~ -10	99~200	W	SLB1WH02T1BC2	0.6
1/4"	2.0	0.14	0	30	20	-100~ -10	99~200	W	SLB1WH02T1B02	0.6
1/4"	2.5	0.23	0	17	17	-100~ -10	99~200	W	SLB1WH02T1BC3	0.6
1/4"	3.0	0.3	0	13	13	-100~ -10	99~200	W	SLB1WH02T1B03	0.6
3/8"	4.0	0.6	0	7	7	-100~ -10	99~200	W	SLB1WH02T1C04	0.7
3/8"	5.0	0.65	0	5	5	-100~ -10	99~200	W	SLB1WH02T1C05	0.7
3/8"	6.0	0.8	0	4	4	-100~ -10	99~200	W	SLB1WH02T1C06	0.7
1/2"	5.0	0.65	0	5	5	-100~ -10	99~200	W	SLB1WH02T1D05	0.7
1/2"	6.0	0.8	0	4	4	-100~ -10	99~200	W	SLB1WH02T1D06	0.7

Solenoid Valve Numbering System for Order

	1	2	3	4	5	6	7	8	9
	Valve Series	Mode of Operation	Coil Type	Voltage	Seal Material	Body Material	Pipe Size	Orifice	Options
E.G.	SLB	1	W H	02	T	1	B	02	
		1= Normally Closed	W=Metallic Housing Lead Wires H CLASS A=DIN Standard Connections H CLASS	02=AC220V 01=AC110V 08=AC380V 12=DC12V 13=DC24V	T= Teflon	1= Forged Brass 4=SS304	A=1/8"	C2=1.5 02=2.0 C3=2.5 03=3.0 04=4.0 05=5.0	N=NPT Thread
							B=1/4"	C2=1.5 02=2.0 C3=2.5 03=3.0 04=4.0 05=5.0	
							C=3/8"	05=5.0 06=6.0	
							D=1/2"	05=5.0 06=6.0	

SLB 2/2-way high (low) temperature solenoid valve · normally closed

- SLB Series solenoid valve it is serialized products,large flow rate,good applicability.Widely used in steam,oil and the other high & low temperqture linquid control.
- Adopted high temperature resistance seal material-PTFE(which material is import),when the media passage the properties is good.
- Coils type: high temperature resistance coil meanwile has the heat conduction protection.
- Ensure the long life time and high reliability.
- Main Technical Parameters



Main Technical Parameters

1. 2/2-Way solenoid valve, Closed when de-energized,open when energized.
2. main material: body: forged brass component:stainless steel
3. Seal Material: TEFLON
4. Ambiet Temp.:-20~65℃
5. Pressure: 1.0~15.0kgf/cm^2(Low temp) 1~10kgf/cm^2(Steam)
6. Media Temp.: low Temp.: -100℃~-10℃ High temp.:99℃~185℃
7. Media: high temperature:steam, heat conducting oil and so on
   Low temperature:N_2 , O_2, CO_2
   Attenation:Under the naturature temperature,such as air,water and the other media, please choose the other economy & suitable solenoid valve.
8. Voltage: AC24V/110V240V/230V 50/60HZ DC12V/24V
   Power Consumption: AC27VA (16W) DC24W
   Voltage Tolerance:-10%~+10%
   Coils type: W (Normal)=Leed Wires A=DIN Standard,Metallic Housing
   Safty Series: Class H Heat resistance coil, IP 65
9. Install: Flow as the arrow,solenoid vertical and upright direction.If media has the granule impurity,please install more than 60 mesh filter.

Solenoid Valve Numbering System for Order

	1	2	3	4	5	6	7	8	9
	Valve Series	Mode of Operation	Normally Closed	Voltage	Seal Material	Body Material	Pipe Size	Orifice	Options
E.G.	SLB	1	WH	02	T	1	E	20	
		1= Normally Closed	W=Metallic Housing Lead Wires H CLASS A=DIN Standard Connections H CLASS	02=AC220V 01=AC110V 08=AC380V 12=DC12V 13=DC24V	T= Teflon	1=Forged Brass 4=SS304	C=3/8"	10=10.0 13=13.0	N= NPT Thread
							D=1/2"	10=10.0 13=13.0	
							E=3/4"	20=20.0	
							G=1"	25=25.0	
							H=1 1/4"	32=32.0	
							J=1 1/2"	40=40.0	
							F=Flange	25=DN25 32=DN32 40=DN40	

SLB 2/2-way high (low) temperature solenoid valve · normally closed

valve slection list

Pipe Size	Orifice (mm)	CV Factor	Operating Pressure kgf/cm²			Fluid temp℃		Coil Type	External Size mm			Model Code AC220V	Weight (KG)
			Min	Max		Low Temp	Steam		A	B	C		
				Low Temp	Steam								
3/8"	13	4.2	1	15	10	-80~-10	99~185	W	75	52	136	SLB1WH02T1C13	1.1
1/2"	13	4.2	1	15	10	-80~-10	99~185	W	75	52	136	SLB1WH02T1D13	1.1
3/4"	20	7.3	1	15	10	-80~-10	99~185	W	80	58	141	SLB1WH02T1E20	1.2
1"	25	11.5	1	15	10	-80~-10	99~185	W	104	80	152	SLB1WH02T1G25	1.7
11/4"	32	22.0	1	15	10	-80~-10	99~185	W	130	92	173	SLB1WH02T1H32	3.1
11/2"	40	29.0	1	15	10	-80~-10	99~185	W	130	90	173	SLB1WH02T1J40	3.0

Normally Closed



External Dimensions

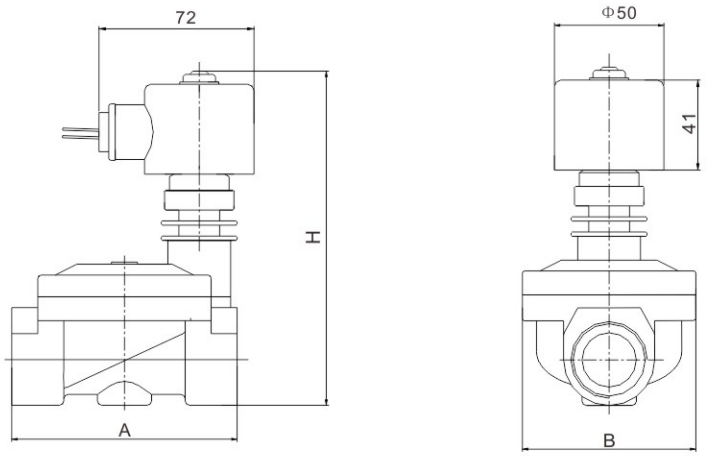

SLB 2/2-way high (low) temperature solenoid valve · normally closed

valve slection list (Flange Connection)

Orifice (mm)	CV Factor	Operating Pressure kgf/cm²			Fluid temp℃		Coil Type	Model Code AC220V	Weight (KG)
		Min	Max		Low Temp	Steam			
			Low Temp	Steam					
25	11.5	1	15	10	-80~-10	99 ~ 185	W	SLB1WH02T1F25	1.6
32	22.0	1	15	10	-80~-10	99 ~ 185	W	SLB1WH02T1F32	2.9
40	29.0	1	15	10	-80~-10	99 ~ 185	W	SLB1WH02T1F40	2.9

External Dimensions (Flange)

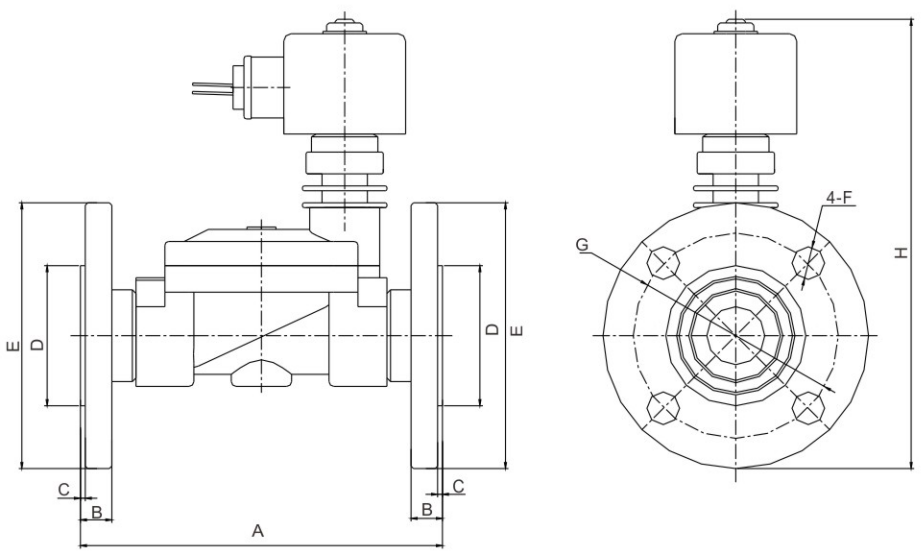

Model	A	B	C	ϕD	ϕE	ϕF	ϕG	H
SLB–25F	150	13	2	58	110	14	85	176
SLB–32F	180	15	2	76	135	18	100	220
SLB–40F	180	15	2	84	145	18	110	225

SLBW 2/2-way cryogenic solenoid valve · normally closed

- 2/2-Way normally closed cryogenic solenoid valve, Closed when de-energized, Open when energized.
- Fluid temperature: -196℃ ~ 110℃
- Ambient temperature: -20℃~65℃
- Voltage: AC220V DC24V
- Body material: SS316
- Seal material: PTFE
- Orifice: 2.0-6.0mm
- Pipe size:1/8″ ~ 1/2″
- Working pressure: 0 ~ 80Bar
- Fluid: cryogenic liquid oxygen, liquid carbon dioxide, liquid nitrogen and other low temperature non-corrosive liquid.
- Flow as the arrow.Best position is solenoid vertical and upright direction.



Normally Closed

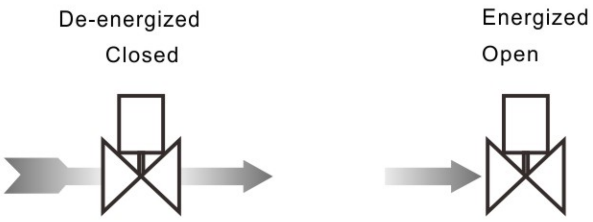

Solenoid Valve Numbering System for Order

	1	2	3	4	5	6	7	8	9	10
	Valve Series	Mode of Operation	Coil Type	Coil Class	Voltage	Seal Material	Body Material	Pipe Size	Orifice	Options
E.G.	**SLBW**	**1**	**D**	**F**	**02**	**T**	**3**	**D**	**03**	□
	SLBW	1= Normally Closed	D= DIN Standard Connections, Fully Encapsulated A=DIN Standard Connections H CLASS	F= F Class	02= AC220V AC230V 13= DC24V	T=PTFE	3= SS316	B=1/4" C=3/8" D=1/2"	02=2.0 C3=2.5 03=3.0 04=4.0 05=5.0 06=6.0	N=NPT Thread
							5=SS316	A=1/8" B=1/4"	02=2.0 C3=2.5 03=3.0 04=4.0 05=5.0 06=6.0	

SLBW 2/2-way cryogenic solenoid valve · normally closed

External Dimensions

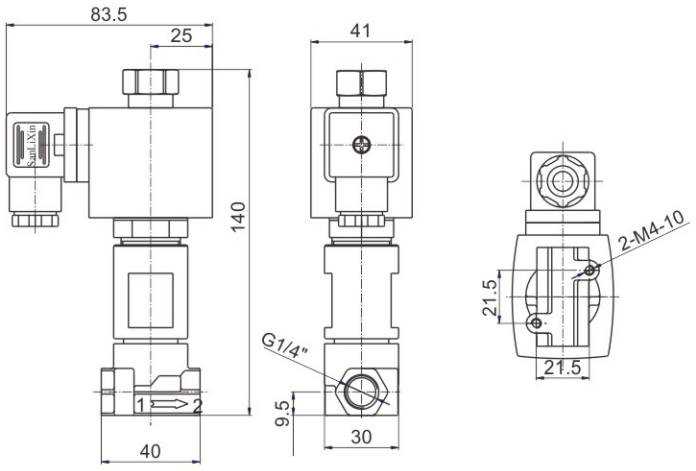

Body: 5 Stainless steel body

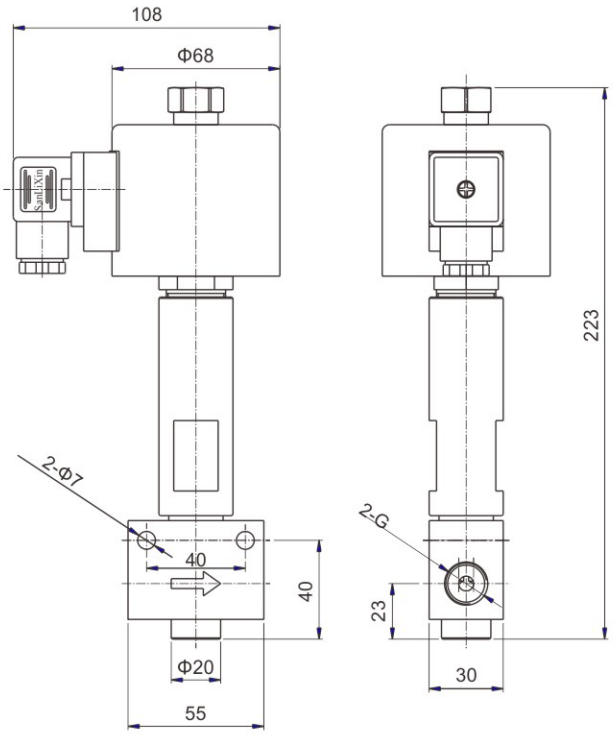

Class 3 Stainless steel body

SLBW 2/2-Way Cryogenic Solenoid Valve · Normally Closed

valve slection list

Pipe Conn -ection	Orifice mm	CV Factor	Operating pressure differential (kgf/cm^2)							Power consumption		Min. Temp. ℃	Max. Temp. ℃	Model Code Follows Voltage are 220VAC	Weight (KG)
			Min.	Max.						VA	W				
				Liquid oxygen Liquid nitrogen		Water Hot water Lliquid		Light oil ≤ 20CST		AC 220V	DC 24V				
				AC	DC	AC	DC	AC	DC						
1/8"	2.0	0.14	0	40	35	40	35	35	25	18	17	-196	110	SLBW1DF02T5A02	0.7
	2.5	0.23	0	30	25	30	25	25	20	18	17	-196	110	SLBW1DF02T5AC3	0.7
	3.0	0.30	0	25	20	25	20	20	16	18	17	-196	110	SLBW1DF02T5A03	0.7
	4.0	0.60	0	10	8	10	8	10	8	18	17	-196	110	SLBW1DF02T5A04	0.7
	5.0	0.65	0	5	3	5	3	4	2.5	18	17	-196	110	SLBW1DF02T5A05	0.7
	6.0	0.80	0	3	2	3	2	2	2	18	17	-196	110	SLBW1DF02T5A06	0.7
1/4"	2.0	0.14	0	40	35	40	35	35	25	18	17	-196	110	SLBW1DF02T5B02	0.7
	2.0	0.14	0	80	60	80	60	70	50	50	40	-196	110	SLBW1DF02T3B02	2.2
	2.0	0.14	0	80	60	80	60	70	50	45	50	-196	110	SLBW1AF02T3B02	2.0
	2.5	0.23	0	30	25	30	25	25	20	18	17	-196	110	SLBW1DF02T5BC3	0.7
	2.5	0.23	0	70	55	70	55	60	45	50	40	-196	110	SLBW1DF02T3BC3	2.2
	2.5	0.23	0	70	55	70	55	60	45	45	50	-196	110	SLBW1AF02T3BC3	2.0
	3.0	0.30	0	25	20	25	20	20	16	18	17	-196	110	SLBW1DF02T5B03	0.7
	3.0	0.30	0	60	50	60	50	50	40	50	40	-196	110	SLBW1DF02T3B03	2.2
	3.0	0.30	0	60	50	60	50	50	40	45	50	-196	110	SLBW1AF02T3B03	2.0
	4.0	0.60	0	10	8	10	8	10	8	18	17	-196	110	SLBW1DF02T5B04	0.7
	4.0	0.60	0	24	20	24	20	20	16	50	40	-196	110	SLBW1DF02T3B04	2.2
	4.0	0.60	0	24	20	24	20	20	16	45	50	-196	110	SLBW1AF02T3B04	2.0
	5.0	0.65	0	5	3	5	3	4	2.5	18	17	-196	110	SLBW1DF02T5B05	0.7
	5.0	0.65	0	12	8	12	8	10	6	50	40	-196	110	SLBW1DF02T3B05	2.2
	5.0	0.65	0	12	8	12	8	10	6	45	50	-196	110	SLBW1AF02T3B05	2.0
	6.0	0.80	0	3	2	3	2	2	2	18	17	-196	110	SLBW1DF02T5B06	0.7
	6.0	0.80	0	6	4	6	4	4	3	50	40	-196	110	SLBW1DF02T3B06	2.2
	6.0	0.80	0	6	4	6	4	4	3	45	50	-196	110	SLBW1AF02T3B06	2.0
3/8"	2.0	0.3	0	80	60	80	60	70	50	50	40	-196	110	SLBW1DF02T3C02	2.1
	2.0	0.3	0	80	60	80	60	70	50	45	50	-196	110	SLBW1AF02T3C02	1.9
	2.5	0.3	0	70	55	70	55	60	45	50	40	-196	110	SLBW1DF02T3CC3	2.1
	2.5	0.3	0	70	55	70	55	60	45	45	50	-196	110	SLBW1AF02T3CC3	1.9
	3.0	0.3	0	60	50	60	50	50	40	50	40	-196	110	SLBW1DF02T3C03	2.1
	3.0	0.3	0	60	50	60	50	50	40	45	50	-196	110	SLBW1AF02T3C03	1.9
	4.0	0.3	0	24	20	24	20	20	16	50	40	-196	110	SLBW1DF02T3C04	2.1
	4.0	0.3	0	24	20	24	20	20	16	45	50	-196	110	SLBW1AF02T3C04	1.9
	5.0	0.3	0	12	8	12	8	10	6	50	40	-196	110	SLBW1DF02T3C05	2.1
	5.0	0.3	0	12	8	12	8	10	6	45	50	-196	110	SLBW1AF02T3C05	1.9
	6.0	0.3	0	6	4	6	4	4	3	50	40	-196	110	SLBW1DF02T3C06	2.1
	6.0	0.3	0	6	4	6	4	4	3	45	50	-196	110	SLBW1AF02T3C06	1.9
1/2"	2.0	0.3	0	80	60	80	60	70	50	50	40	-196	110	SLBW1DF02T3D02	2.0
	2.0	0.3	0	80	60	80	60	70	50	45	50	-196	110	SLBW1AF02T3D02	1.8
	2.5	0.3	0	70	55	70	55	60	45	50	40	-196	110	SLBW1DF02T3DC3	2.0
	2.5	0.3	0	70	55	70	55	60	45	45	50	-196	110	SLBW1AF02T3DC3	1.8
	3.0	0.3	0	60	50	60	50	50	40	50	40	-196	110	SLBW1DF02T3D03	2.0
	3.0	0.3	0	60	50	60	50	50	40	45	50	-196	110	SLBW1AF02T3D03	1.8
	4.0	0.3	0	24	20	24	20	20	16	50	40	-196	110	SLBW1DF02T3D04	2.0
	4.0	0.3	0	24	20	24	20	20	16	45	50	-196	110	SLBW1AF02T3D04	1.8
	5.0	0.3	0	12	8	12	8	10	6	50	40	-196	110	SLBW1DF02T3D05	2.0
	5.0	0.3	0	12	8	12	8	10	6	45	50	-196	110	SLBW1AF02T3D05	1.8
	6.0	0.3	0	6	4	6	4	4	3	50	40	-196	110	SLBW1DF02T3D06	2.0
	6.0	0.3	0	6	4	6	4	4	3	45	50	-196	110	SLBW1AF02T3D06	1.8

SAV direct acting gas solenoid valve

SAV series gas solenoid valve used in the Burner, Hear Equipment, Industrial Furnace and so on of the gas or air media.So as to achieve the procedure control or long-distance control of systems and equipment.



Main Technical Parameters

1. Direct acting zero differential pressure,large flow rate
2. 2-way normally closed solenoid valve, closed when de-energized, open when energized.
3. Open and cloesd time: <1 second
4. Material: main valve body material:die-casting aluminium, Others: Stainless steel/ Brass
5. Seal material: Viton
6. Media: coal gas, nature gas, air and the other normal non-etchant gas
7. Media temp.:<65℃ ambiet temp.:0~50℃
8. Voltage: DC12v DC24V AC220V/50HZ class: H ed100% Voltage tolerance: -10%~+10%
9. It can used explosion-proof coil, ex class: Ex mb IIC T4 Gb
10. Install: flow as the arrow, solenoid vertical and upright direction
11. Parts of coil can fix SM Coil. AC 220V/AC110V/AC24V/DC24V

External Dimensions

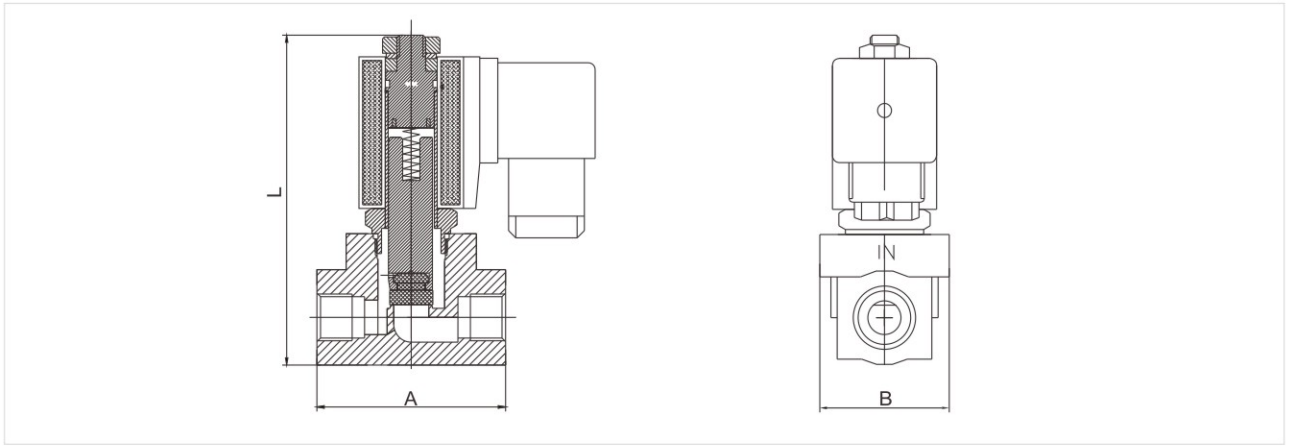

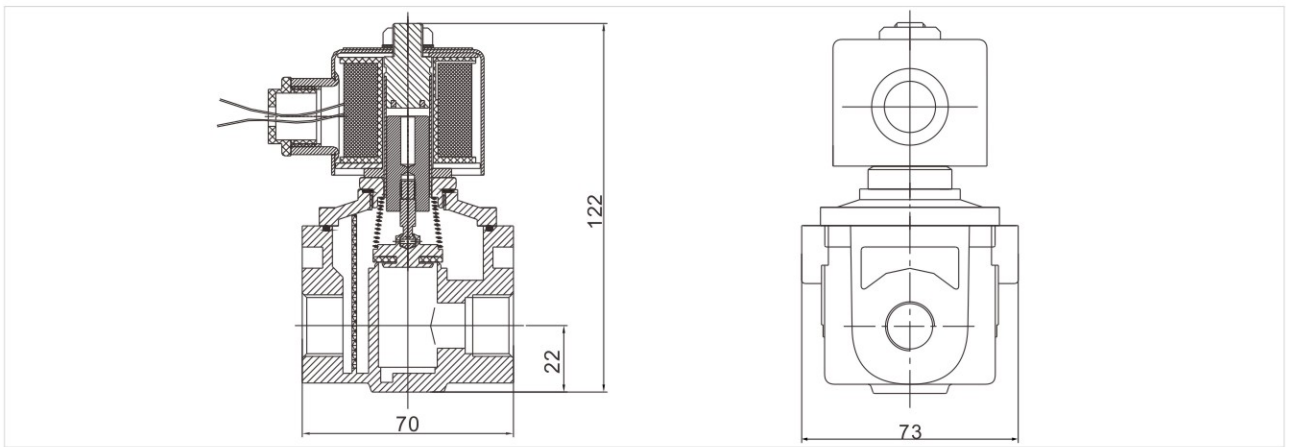

SAV direct acting gas solenoid valve

valve slection list

Connection	Orifice (mm)	CV Factor	Operating Pressure(mbar) mbar		Power Consumption		Coil Type	external size mm			Model Code AC220V	N.W. (KG)
					AC	DC						
			Min	Max	VA	W		A	B	H		
1/4"	9	1.2	0	600	22	13	D	51	35	91	SAV1DF02V8B09	0.3
3/8"	9	1.4	0	600	22	13	D	51	35	91	SAV1DF02V8C09	0.3
1/2"	9	1.4	0	600	22	13	D	51	35	91	SAV1DF02V8D09	0.3
	19	7.5	0	360	33	20	A	70	73	122	SAV1AF02V8D19	0.7
3/4"	19	7.5	0	360	33	20	A	70	73	122	SAV1AF02V8E20	0.7
1"	25	13	0	360	41	34	A	90	75	127	SAV1AF02V8G25	1.5
1 1/4"	45	31	0	500	41	34	A	137	122	208	SAV1AF02V8H45	3.0
1 1/2"	45	31	0	500	41	34	A	137	122	208	SAV1AF02V8J45	3.0
2"	45	31	0	500	41	34	A	137	122	208	SAV1AF02V8K45	3.0

Solenoid Valve Numbering System for Order

	1	2	3	4	5	6	7	8	9
	Valve Series	Mode of Operation	Coil Type	Coils Class	Voltage	Seal Material & Body Material	Pipe Size	Orifice	Options
E.G.	SAV	1	A	H	02	V8	E	20	☐
	Special for Gas Solenoid Valve Main body material :Anodized Aluminium	1= Normally Closed 2= Normally Open	W=Metallic Housing Lead Wires A=DIN Standard Connections, Ironclad Coils D=DIN Standard Connections, Fully Encapsulated X=Explosion-proof	F= F class H= H class	02=AC220V 01=AC110V 08=AC380V 12=DC12V 13=DC24V	Seal Material: VITON Body Material: Aluminium	B=1/4"	06=6.0 09=9.0	N= NPT Thread
							C=3/8"	06=6.0 09=9.0	
							D=1/2"	09=9.0 19=19.0	
							E=3/4"	20=20.0	
							G=1"	25=25.0	
							H=1 1/4"	45=45.0	
							J=1 1/2"		
							K=2"		

SCF fuel gas emergency cut off solenoid valve

Product Characteristics

1: SCF series is the normally open valve.

2: The valve in daily workis normally open.coils be de-energized

3: When the accident happens,coils has energized. through the internal spring instractions reaction. the valve quickly closed.if this time to cut off the power the valve still closed. After deal with the acgident please press the black button so that the valve open and working.



Main Parameters

1: 2/2-way solenoid valve

2: Body:Forged brass

3: Seals:VITON (NBR)

4: Media:Gas,nature gas,lpg, ete

5: Ambient temp:-15℃~+60℃

6: Voltage:DC12V,DC24V,AC220V/50HZ

7: On/off:＜1S

8: Max.pressure:500mbar

9: Wounting:flow as arrow

External Dmension

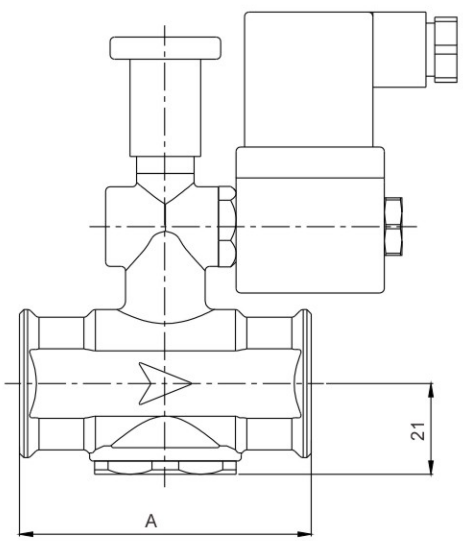

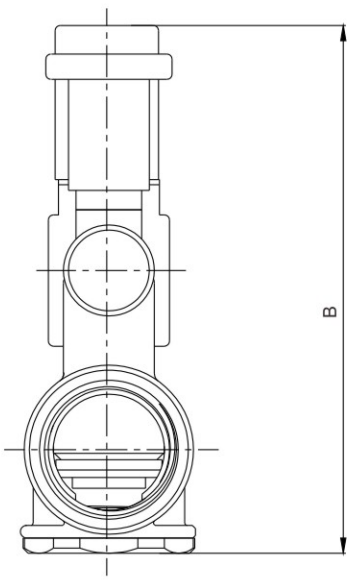

SCF fuel gas emergency cut off solenoid valve

Valve slection list

Pipe Size	Orifice ϕmm	Factor CV	Working Pressure mbar		Power		Coils Type	Size mm		Model AC220V	Weight (KG)
					AC	DC					
			Min	Max	VA	W		L（A）	W（B）		
1/2″	15	5	0	500	8	7	D	66	107	SCF2DF02VID15M	0.55
3/4″	20	7.5	0	500	8	7	D	66	107	SCF2DF02VIE20M	0.48
1″	25	13	0	500	8	7	D	82	122	SCF2DF02VIG25M	0.78

Solenoid Valve Numbering System for Order

	1	2	3	4	5	6	7	8	9
	Valve Series	Mode of Operation	Coil Type	Coils Class	Voltage	Seal Material & Body Material	Pipe Size	Orifice	Options
E.G.	SCF	2	D	F	02	V/1	D	15	M
	Fuel Gas Emergency Cut Off Solenoid Valve	2= Normally Open	D=DIN Standard Connection Fully Encapsulated	F= F Class H= H Class	02=AC220V 01=AC110V 12=DC12V 13=DC24V	V=VITON 1=Forged Brass	D=1/2" E=3/4" G=1"	15=15.0 20=20.0 25=25.0	N=NPT Thread M= Manual override
						6=Iron	F=Flange	65=65.0 80=80.0 100=100.0	

SCF fuel gas emergency cut off solenoid valve

Components

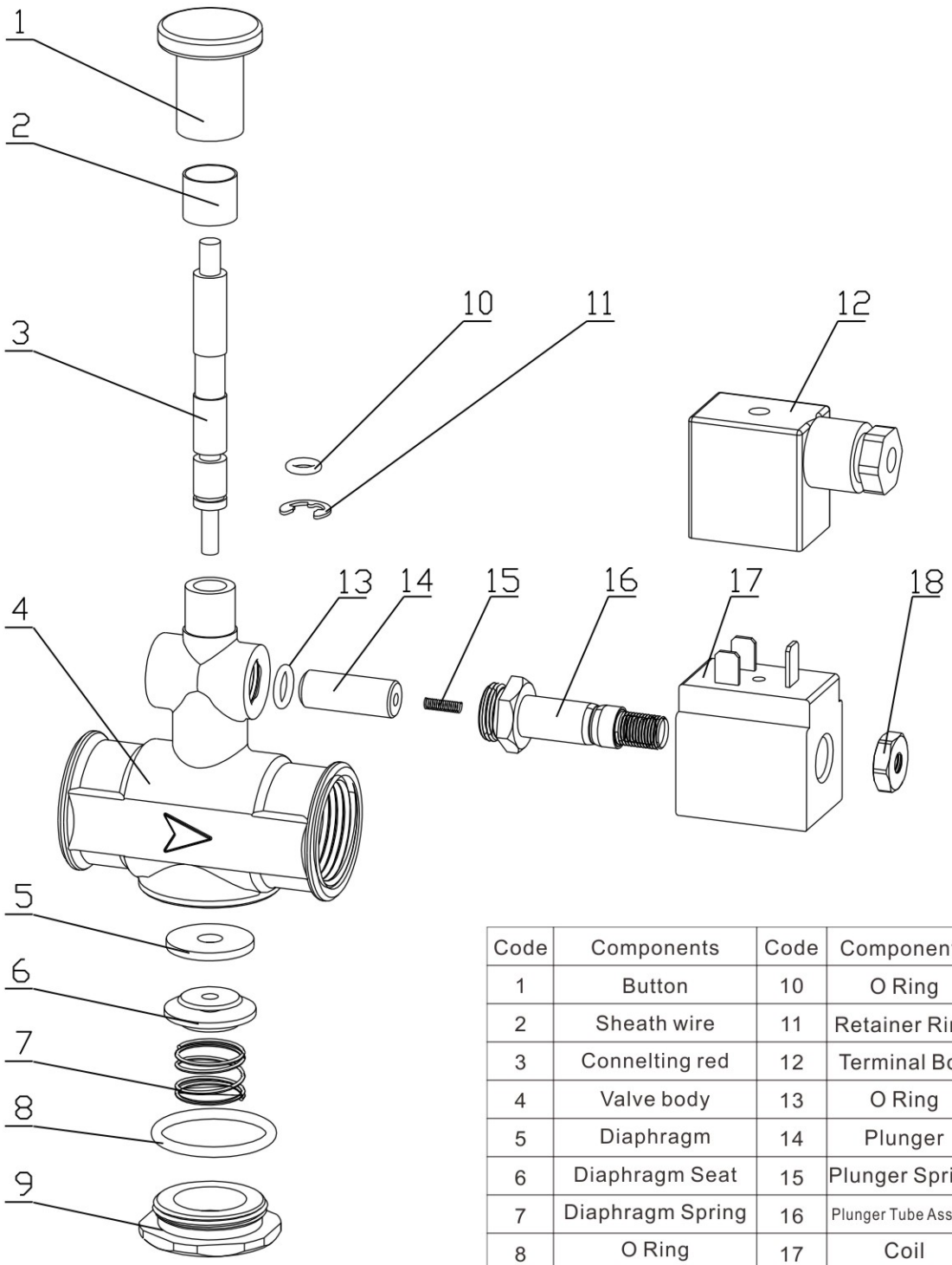

Code	Components	Code	Components
1	Button	10	O Ring
2	Sheath wire	11	Retainer Ring
3	Connelting red	12	Terminal Box
4	Valve body	13	O Ring
5	Diaphragm	14	Plunger
6	Diaphragm Seat	15	Plunger Spring
7	Diaphragm Spring	16	Plunger Tube Assembly
8	O Ring	17	Coil
9	Bottoun End Cover	18	Nut

SCF large diameter emergency cut off solenoild valve

Main Parameters

1: 2/2-way solenoid valve

2: Body: Iron

3: Seals:VITON (NBR)

4: Media:Gas,nature gas,lpg, ete

5: Ambient temp:-15℃~+60℃

6: Voltage:AC220V/50HZ,DC12V,DC24V,

7: On/off:＜1S

8: Working pressure:0-6bar

9: Wounting:flow as arrow.



Valve slection list(Flange)

Pipe Size	Orifice ϕmm	Factor CV	Working Pressure (bar)		Power		Coils Type	Model AC220V
					AC	DC		
			Min	Max	V A	W		
65F	63	52	0	6	57	25	D	SCF2DF02V6F65M
80F	80	81	0	6	57	25	D	SCF2DF02V6F80M
100F	96	127	0	6	57	25	D	SCF2DF02V6F100M

External Dimensions Chart

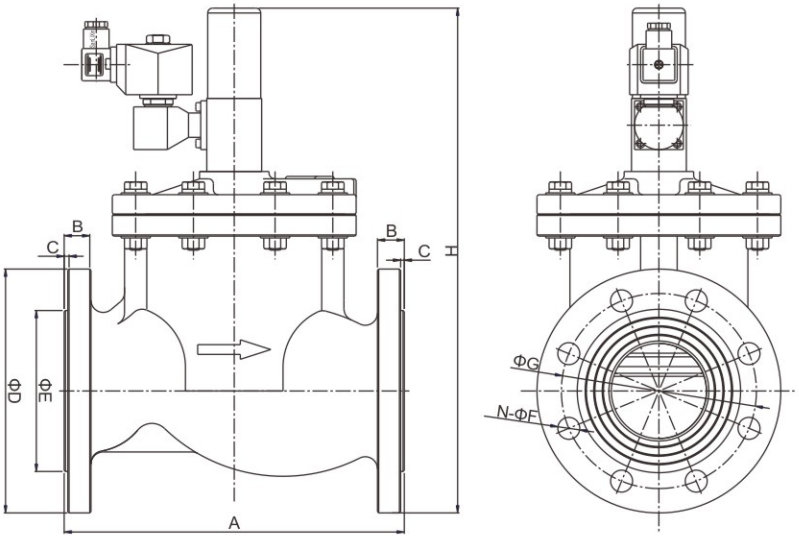

Model	A	B	C	ΦD	ΦE	ΦF	ΦG	H	N	Weight (KG)
SCF-65F	240	20	3	185	118	18	145	392	4	23.7
SCF-80F	280	22	3	200	132	18	160	415	8	29.1
SCF-100F	320	25	3	220	160	18	180	447	8	44.8

SCFT series gas emergency shutoff valve

SCFT gas emergency shut-off valve is divided into normally closed type and normally open type. When the normally closed shut-off valve is in the open state of the solenoid valve, the coil needs to be energized at the same time. When the coil is powered off, the solenoid valve is closed; Normally open type: when the solenoid valve is opened, the coil does not need to be energized, and when it is closed, only the coil needs to be momentarily energized. Both normally closed and normally open shut-off valves require manual opening of the solenoid valve. Normally closed shut-off valve shall be powered on the coil first and then manually opened; Normally open type does not need to energize the coil, and can be opened manually.



Technical parameters

1、Body material：Aluminum alloy
2、Seal Material：VITON
3、Applicable media：Gas, natural gas, liquefied petroleum gas, etc
4、Ambient temp：−18-60℃
5、Coil：SM coil，AC220V DC24V
6、Maximum working pressure：360mbar
7、turn-off time：＜1s
8、Diameter：ϕ19mm
9、Flow as the arrow.Best position is solenoid vertical and upright direction.

Solenoid Valve Numbering System for Order

	1	2	3	4	5	6	7	8	9	10
	Valve Series	Mode of Operation	Mode of Operation	Coils Class	Voltage	Seal Material	Body Material	Pipe Size	Orifice	Options
E.G.	SCFT	1	D	F	02	V	8	D	19	□
	SCFT	2=Normally Open	M=SM Coil D=DIN Standard Connection Fully Encapsulated	F=F Class	02=AC220V 01=AC110V 13=DC24V	V=VITON	8=Aluminum alloy	D=1/2" E=3/4"	19=19.0	N=NPT Thread

SCFT series gas emergency shutoff valve

Valve slection list (Normally Closed)

Pipe Size	Orifice ϕmm	Factor CV	Working Pressure mbar		Coils Type	Coil Class	Max Fuids Temp ℃	Model AC220V	Weight (KG)
			Min	Max					
1/2"	19	7.5	0	360	M	F	120	SCFT1MF02V8D19	0.8
3/4"	19	7.5	0	360	M	F	120	SCFT1MF02V8E19	

Valve slection list (Normally Open)

Pipe Size	Orifice ϕmm	Factor CV	Working Pressure mbar		Coils Type	Coil Class	Max Fuids Temp ℃	Model AC220V	Weight (KG)
			Min	Max					
1/2"	19	7.5	0	360	M	F	120	SCFT2MF02V8D19	0.8
3/4"	19	7.5	0	360	M	F	120	SCFT2MF02V8E19	

Valve slection list (Normally Open)

Pipe Size	Factor CV	Power		Electric current	
		Start-up	Keep	Start-up	Keep
SM-4101	AC220V	130VA	6.0VA	590mA	28mA
SM-4102	AC110V	95VA	8.0VA	900mA	75mA
SM-4106	DC24V	98W	8.8W	4050mA	365mA
SM-4104	AC24V	66VA	6.8VA	3400mA	360mA
SM-4107	DC12V	45W	4.5W	3750mA	380mA

External Dimensions Chart

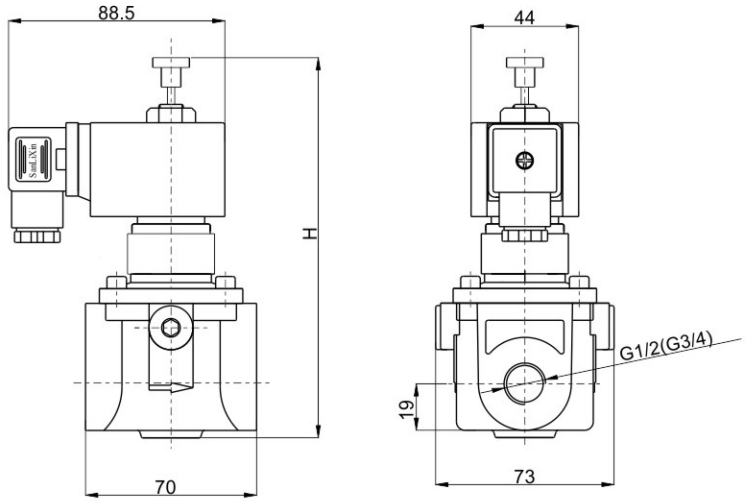

Operation mode	H
Normally Closed	156
Normally Open	160

SLE manifold type series solenoid valve

Solenoid Valves Numbering System for Order

Position description	1	2	3	4	5	6	7	8	9	10	
	Valve Series	Mode of Operation	Coil Type	Coil Class	Voltage	Seal Material	Body Material	Pipe Size	Orifice (ϕ mm)	Manifold	
E.G.	SLE	1	D	F	02	N	1	A	03	N4	□
	Manifold type Solenoid Valve	1: Normally Closed	D: DIN Standard Connections, Fully Encapsulated S: NASS Coil (DIN)	F: F Class	02=220VAC 230VAC 50/60HZ 01=110VAC 120VAC 50/60HZ 05=24VAC 13=DC24V Contact the Factory for Others	N: NBR V: VITON E: EPDM	1= Brass 8= Aluminium (Standard)	A=1/8" B=1/4" C=3/8" D=1/2"	02=2.0 03=3.0 04=4.0 05=5.0 06=6.0 09=9.0	N2=2 N3=3 N4=4 N5=5	L: Neon Lamp N: NPT Connection

SLE manifold type series solenoid valve

1: 2-Way normally closed solenoid valve; closed when de-energized，open when energized。

2: Body material: brass, aluminum (standard)

3. Ambient Temp. 0℃~65℃; flow as the arrow, one inlet many outlets(N)

4: Coil can fix Germany NASS Coil,

Standard voltage: 220VAC/230VAC/240VAC

50/60HZ 22VA 24VA 24VDC 13W



Normally Closed **De-energized** **Closed**

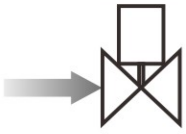

Energized **Open**



External Dimensions Chart

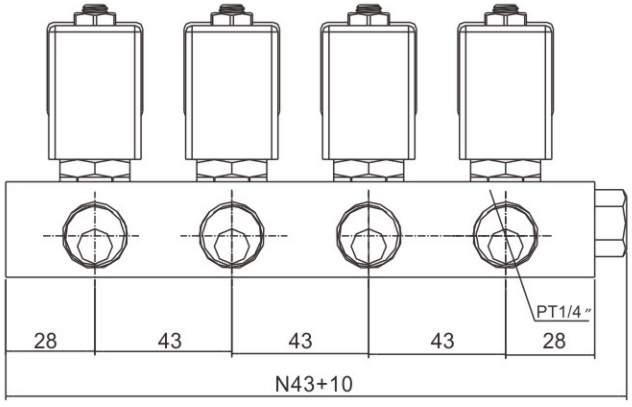

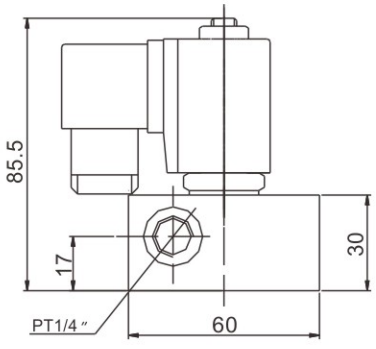

SLE manifold type series solenoid valve

Valve Selection List

Pipe Conn -ection	Orifice mm	Cv Factor	Operating pressure differential (kgf/cm²) Min.	Max. Air Gas AC 220V	Max. Air Gas DC 24V	Max. Water Hot water Liquids AC 220V	Max. Water Hot water Liquids DC 24V	Max. Light oil ≤20CST AC 220V	Max. Light oil ≤20CST DC 24V	Max. Fluids Temp.	Coil Type	Power consumption VA AC 220 V	Power consumption W DC 24 V	Coil Class	Model Code Follows Voltage are 220VAC 50/60HZ
1/8"	2.0	0.15	0	20	20	20	15	15	10	120	D	22	13	F	SLE1DF02V8A02
	3.0	0.23	0	10	10	10	10	7	7	120	D	22	13	F	SLE1DF02V8A03
	4.0	0.44	0	7	7	7	5	5	5	120	D	22	13	F	SLE1DF02V8A04
	5.0	0.5	0	4	2.5	4	2.5	2.5	2.5	120	D	22	13	F	SLE1DF02V8A05
1/4"	2.0	0.15	0	20	20	20	15	15	10	120	D	22	13	F	SLE1DF02V8B02
	3.0	0.23	0	13	13	13	10	7	5	120	D	22	13	F	SLE1DF02V8B03
	4.0	0.44	0	7	7	7	5	5	5	120	D	22	13	F	SLE1DF02V8B04
	5.0	0.5	0	4	2.5	4	2.5	2.5	2.5	120	D	22	13	F	SLE1DF02V8B05
	6.0	0.8	0	3	2	3	1.5	2	1	120	D	22	13	F	SLE1DF02V8B06
3/8"	5.0	0.5	0	4	2.5	4	2.5	2.5	2.5	120	D	22	13	F	SLE1DF02V8C05
	6.0	0.8	0	3	2	3	1.5	2	1	120	D	22	13	F	SLE1DF02V8C06
	9.0	1.65	0	1	1	0.8	0.4	0.5	0.3	120	D	22	13	F	SLE1DF02V8C09
1/2"	5.0	0.5	0	4	2.5	4	2.5	2.5	2.5	120	D	22	13	F	SLE1DF02V8D05
	6.0	0.8	0	3	2	3	1.5	2	1	120	D	22	13	F	SLE1DF02V8D06
	9.0	1.65	0	1	1	0.8	0.4	0.5	0.3	120	D	22	13	F	SLE1DF02V8D09

SLE Series Coils Characteristics List

Coils Model Code	Voltage	Power consumption 50HZ VA Inrush	Power consumption 50HZ VA Holding	Power consumption 60HZ VA Inrush	Power consumption 60HZ VA Holding	Power consumption DC W	Suitable Valve Model
D04-3101	AC220V	55	22	55	22		SLE Normally Closed Series
D04-3102	AC110V	55	22	55	22	———	
D04-3104	AC24V	45	18	45	18		
D04-3106	DC24V	———				13	
D04-3107	DC12V					13	

SLE manifold type series solenoid valve

Main Technical Parameters

2-way solenoid valve normally closed,closed when de-energized,open when energized.

One inlet many outlets(n); two inlets many outlets(n)



Body material:brass

Internal component: stainless steel

Seal: NBR(media temp.: < = 80℃)

EPDM(media temp.: < = 120℃)

VITON(media temp.: < = 120℃)

Operating media:water,hot water,gas,oil (<=20cst)

Orifice: Φ10.0mm

Connection: outlet connection: 1/4'' 3/8'' 1/2''

inlet connection: 1/2''

Operating pressure:0~13kgf/cm^2

Voltage:AC220v 110v 24v 50/60hz DC24v 12v

Power consumption: AC22VA (13w) DC13w

Voltage tolorance:-10%~+10%

Coil type:D=DIN Standard Connections Fully Encapsulated.

N=lead wires

Coils can be use Nass Coil

Heat resistant class: class F 155℃ Ed100%

Ambient temp: 0~65℃

Solenoid Valve Numbering System for Order

	1	2	3		4	5	6	7	8	9	10
	Valve Series	Mode of Operation	Coil Type	Coils Class	Voltage	Seal Material	Body Material	Pipe Size	Orifice	Comp-osition	Options
E.G.	SLE	1	D	F	02	V	1	D	10	N3	K
		1= Normally Closed	D=DIN standard connections, fully encapsulated N=lead wires water-tight fully eucapsulated S= NASS coil	F Class	02= AC220V 01= AC110V 12= DC12V 13= DC24V	N= NBR E= EPDM V= VITON	1= Forged Brass	B= 1/2"×1/4" C= 1/2"×3/8" D= 1/2"×1/2"	10.0 mm	N2= 2Pcs N3= 3Pcs ..... N8= 8Pcs	N=NPT L=Neon Lamp

SLE manifold type series solenoid valve

External Dimensions Chart

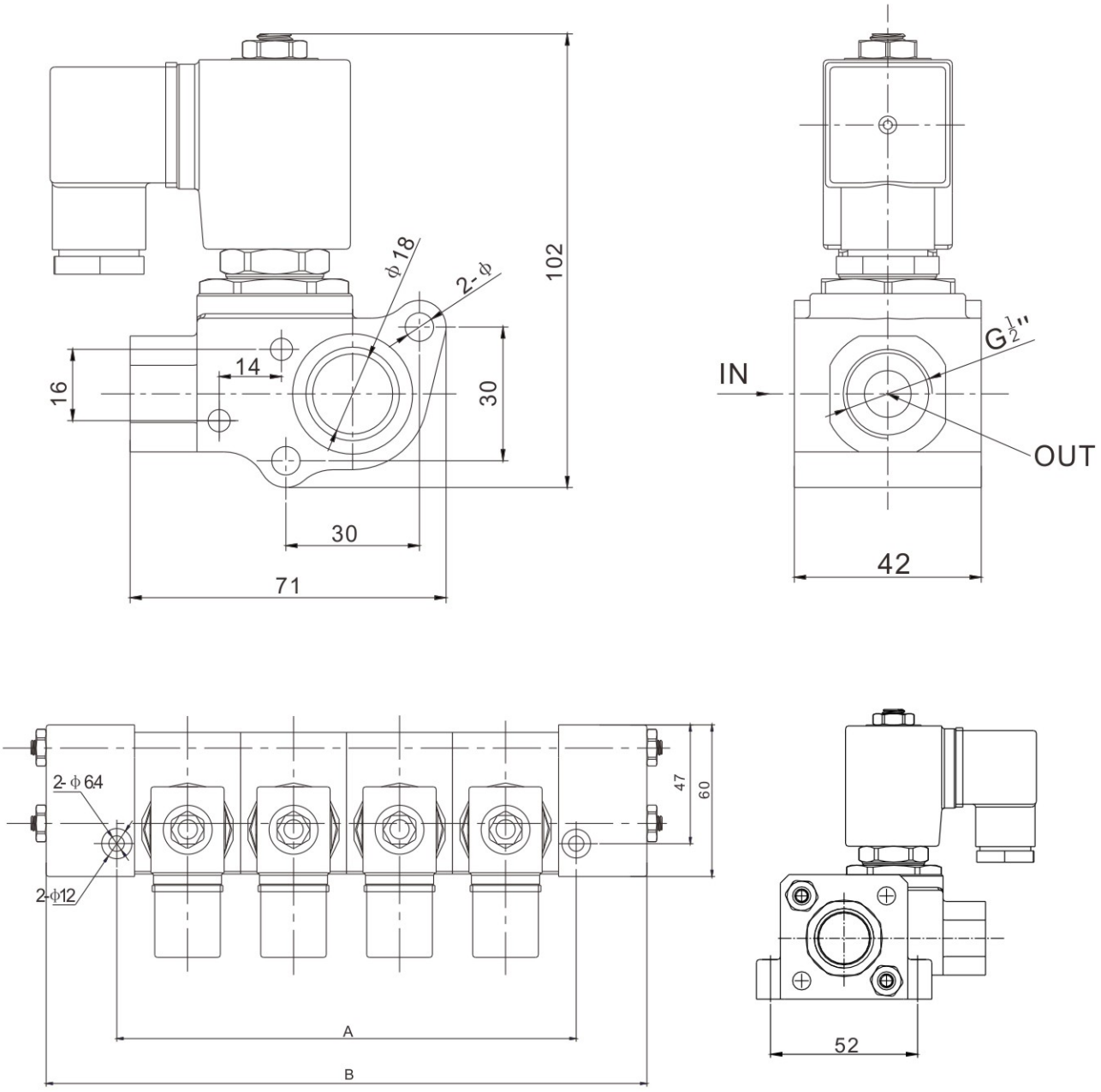

composition No	2	3	4	5	6	7	8
A: Mounting distance	94	136	178	220	262	304	346
B: total length	120	162	204	246	288	330	372
Weight (KG)	1.9	2.7	3.5	4.4	5.2	5.9	6.8

SLE manifold type series solenoid valve

N PCS solenoid valves mounting connection diagram

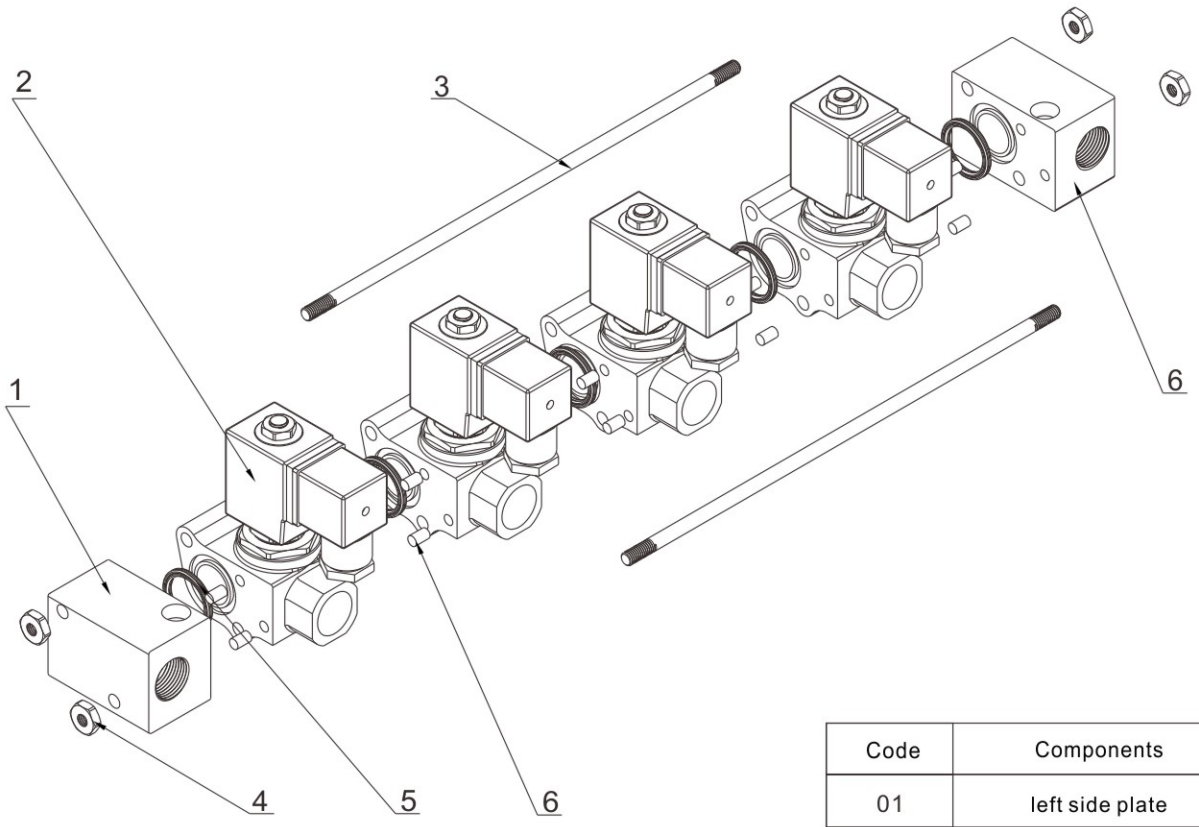

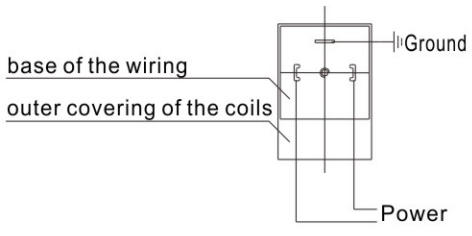

Code	Components
01	left side plate
02	single solenoid valve
03	connecting screw
04	joint nut
05	star type O ring
06	Dowel
07	right side plate

Coil dimensioned chart

N=Lead wires,water-tight Fully Eucapsulated

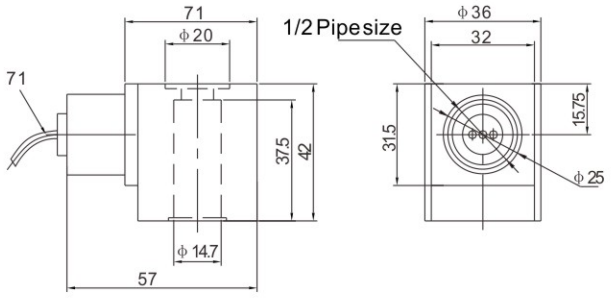

DIN Standard Connections

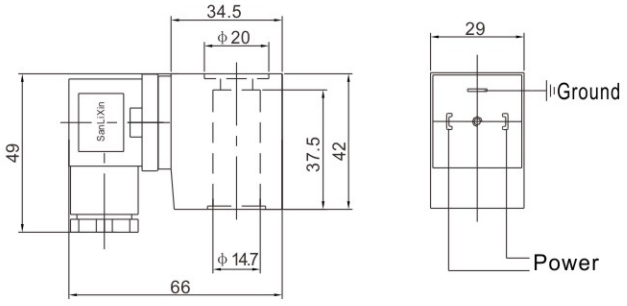

SLJ plate-type，integrated series solenoid valve

SLJ1 Normally Closed 3/2-way Series

SLJ2 Normally Open 3/2-way Series

SLJ3 Universal 3/2-way Series

SLJ4 2/2-way Series



9



1

Product Characteristics

SLJ 3/2-way Series solenoid valve structure compact, Installed in integrated plate, Realize the piping to be not moved, Optional installation exchange solenoid valves, According to the requirement of customer mix of integration (At the same time,install 2/2-way and 3/2-way solenoid valve on one plate), This product widely used for cylinder、valve etc implementation of the automatic control and air compressor.

Solenoid Valves Numbering System for Order

	1	2	3	4	5	6	7	8	9
	Valve Series	Mode of Operation	Coil Type	Coil Class	Voltage	Body Material	Pipe Size	Orifice (mm)	Options
E.G.	SLJ	1	D	F	02	N/1	J	C2	M
		1: Normally Closed 2: Normally Open 3: Universal 3/2-way Serie 4:2/2-way Series	D: DIN Standard Connections, Fully Encapsulated N: Lead Wires, Water-tight, Fully Encapsulated	F:Class	02= AC220V AC230V 50/60HZ 01= AC110V AC120V 50/60HZ 13= DC 24V	N=NBR V=VITON E=EPDM 1=Forged Brass 9=Forged Brass	J= Installe in integrated plate	C2=1.5 02=2.0 C3=2.5	L= Neon Lamp

SLJ plate-type, integrated series solenoid valve

SLJ1 Normally Closed 3/2-way Series Selection List

Orifice (mm)		CV Factor		Operating pressure differential(bar)							Coil Type	Power		Coil Class	Model Code Follows Voltage are AC220V 50/60HZ	Weight (KG)
					Max.							VA	W			
Valve bady	Top	Valve bady	Top	Min	Air Gas		Water Liquids		Light oil ≤20CST			AC 220V	DC 24 V		Brass	
					AC	DC	AC	DC	AC	DC						
1.2	1.5	0.05	0.05	0	16	16	16	16	16	16	D	20	20	F	SLJ1DF02N1JC1	0.31
1.2	1.5	0.05	0.05	0	16	16	16	16	16	16	D	22	13	F	SLJ1DF02N9JC1	0.28
1.5	1.5	0.07	0.05	0	10	8	10	8	10	8	D	20	20	F	SLJ1DF02N1JC2	0.31
1.5	1.5	0.07	0.05	0	10	8	10	8	10	8	D	22	13	F	SLJ1DF02N9JC2	0.28
2.0	1.5	0.14	0.05	0	7	5	7	5	7	5	D	20	20	F	SLJ1DF02N1J02	0.31

De-energized & Energized-Flow Chart

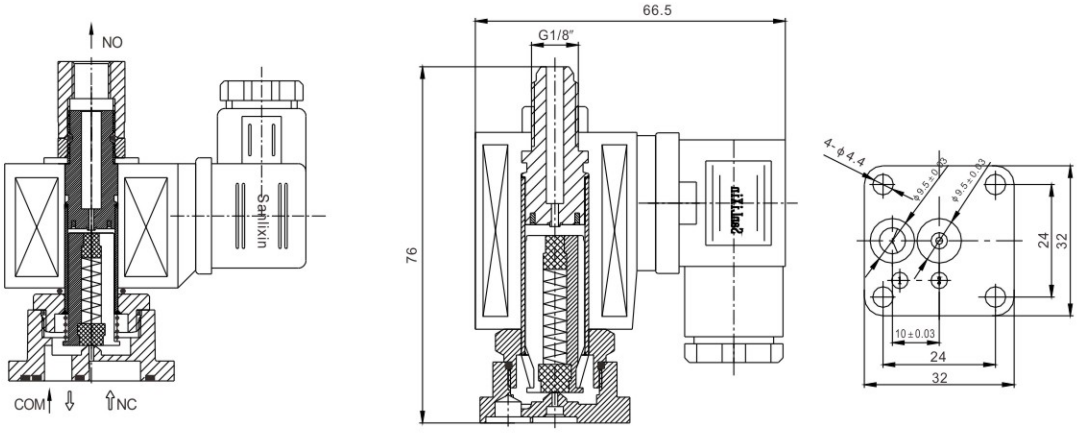

Drawings Of Body 9

Configuration dimension chart(3/2-way)

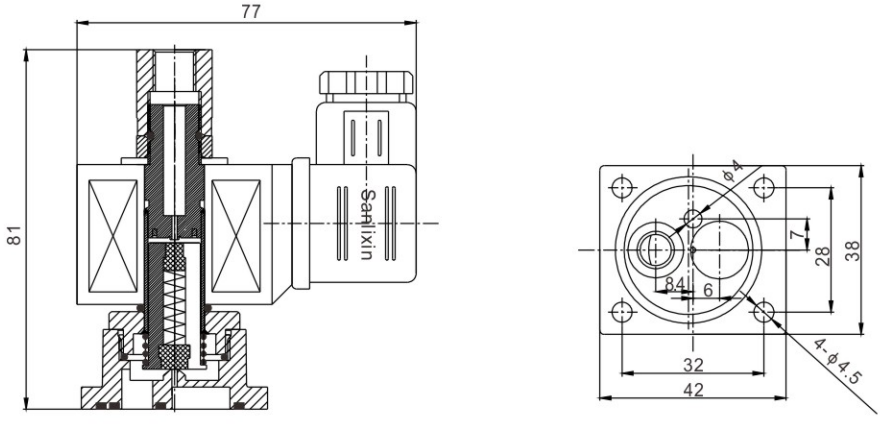

Drawings of solenoid valve use 06-310 coils

SLJ2 Normally Open 3/2-way Series Selection List

Orifice (mm)		CV Factor		Operating pressure differential(bar)							Coil Type	Power		Coil Class	Model Code Follows Voltage are AC220V 50/60HZ	Weight (KG)
				Min	Max.							VA	W			
Valve bady	Top	Valve bady	Top		Air Gas		Water Liquids		Light oil ≤20CST			AC 220V	DC 24 V			
					AC	DC	AC	DC	AC	DC					Brass	
1.2	1.5	0.05	0.05	0	16	12	16	12	16	12	D	20	20	F	SLJ2DF02N1JC1	0.31
1.2	1.5	0.05	0.05	0	16	12	16	12	16	12	D	22	13	F	SLJ2DF02N9JC1	0.28
1.5	1.5	0.07	0.05	0	10	8	10	8	10	7	D	20	20	F	SLJ2DF02N1JC2	0.31
1.5	1.5	0.07	0.05	0	10	8	10	8	10	7	D	22	13	F	SLJ2DF02N9JC2	0.28
2.0	1.5	0.14	0.05	0	7	4	7	5	3	2	D	20	20	F	SLJ2DF02N1J02	0.31

De-energized & Energized-Flow Chart

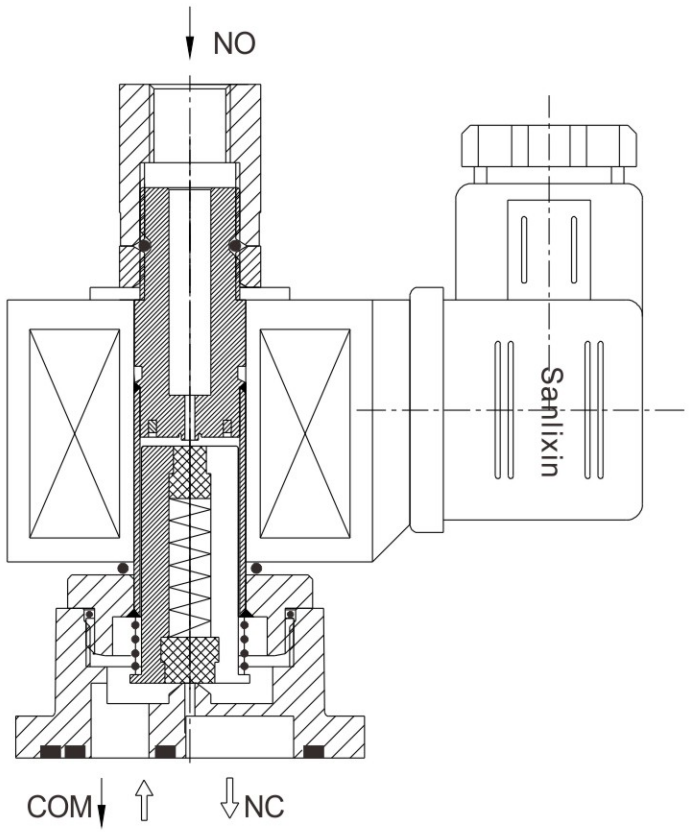

SLJ plate-type, integrated series solenoid valve

SLJ3 Universal 3/2-way Series Selection List

Orifice (mm)		CV Factor		Operating pressure differential(bar)							Coil Type	Power		Coil Class	Model Code Follows Voltage are AC220V 50/60HZ	Weight (KG)
					Max.							VA	W			
Valve bady	Top	Valve bady	Top	Min	Air Gas		Water Liquids		Light oil ≤20CST			AC 220V	DC 24 V			
					AC	DC	AC	DC	AC	DC					Brass	
1.2	1.5	0.05	0.05	0	10	10	10	10	8	8	D	20	20	F	SLJ3DF02N1JC1	0.31
1.2	1.5	0.05	0.05	0	10	10	10	10	8	8	D	22	13	F	SLJ3DF02N9JC1	0.28
1.5	1.5	0.07	0.05	0	7	7	7	7	6	6	D	20	20	F	SLJ3DF02N1JC2	0.31
1.5	1.5	0.07	0.05	0	7	7	7	7	6	6	D	16	13	F	SLJ3DF02N9JC2	0.28
2.0	1.5	0.14	0.05	0	4	4	4	4	2.5	2	D	20	20	F	SLJ3DF02N1J02	0.31

De-energized & Energized-Flow Chart

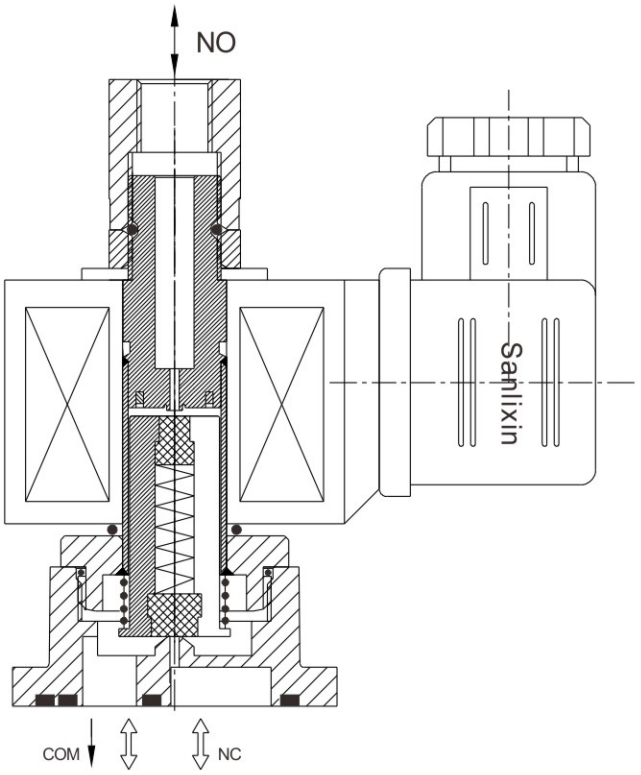

SLJ plate-type, integrated series solenoid valve

SLJ4 2/2-way Series Selection List

Orifice (mm)	CV Factor	Operating pressure differential(bar)							Coil Type	Power		Coil Class	(L) X (H)	Model Code Follows Voltage are AC220V 50/60HZ	Weight Kg
		Min	Max.							VA	W				
			Air Gas		Water Liquids		Light oil ≤20CST			AC 220V	DC 24 V				
			AC	DC	AC	DC	AC	DC						Brass	
1.2	0.05	0	25	25	25	25	25	25	D	20	20	F	77×62	SLJ4DF02N1JC1	0.31
1.5	0.07	0	21	21	21	21	21	21	D	20	20	F	77×62	SLJ4DF02N1JC2	0.31
2.0	0.14	0	15	15	15	15	15	15	D	20	20	F	77×62	SLJ4DF02N1J02	0.31
2.5	0.21	0	12	10	10	8	6	5	D	20	20	F	77×62	SLJ4DF02N1JC3	0.31
3.0	0.23	0	8	4	6	4	4	3	D	20	20	F	77×62	SLJ4DF02N1J03	0.31
1.2	0.05	0	25	25	25	25	25	25	D	22	13	F	66.5×70	SLJ4DF02N9JC1	0.28
1.5	0.07	0	21	21	21	21	21	21	D	22	13	F	66.5×70	SLJ4DF02N9JC2	0.28

Configuration dimension chart(2/2-way)

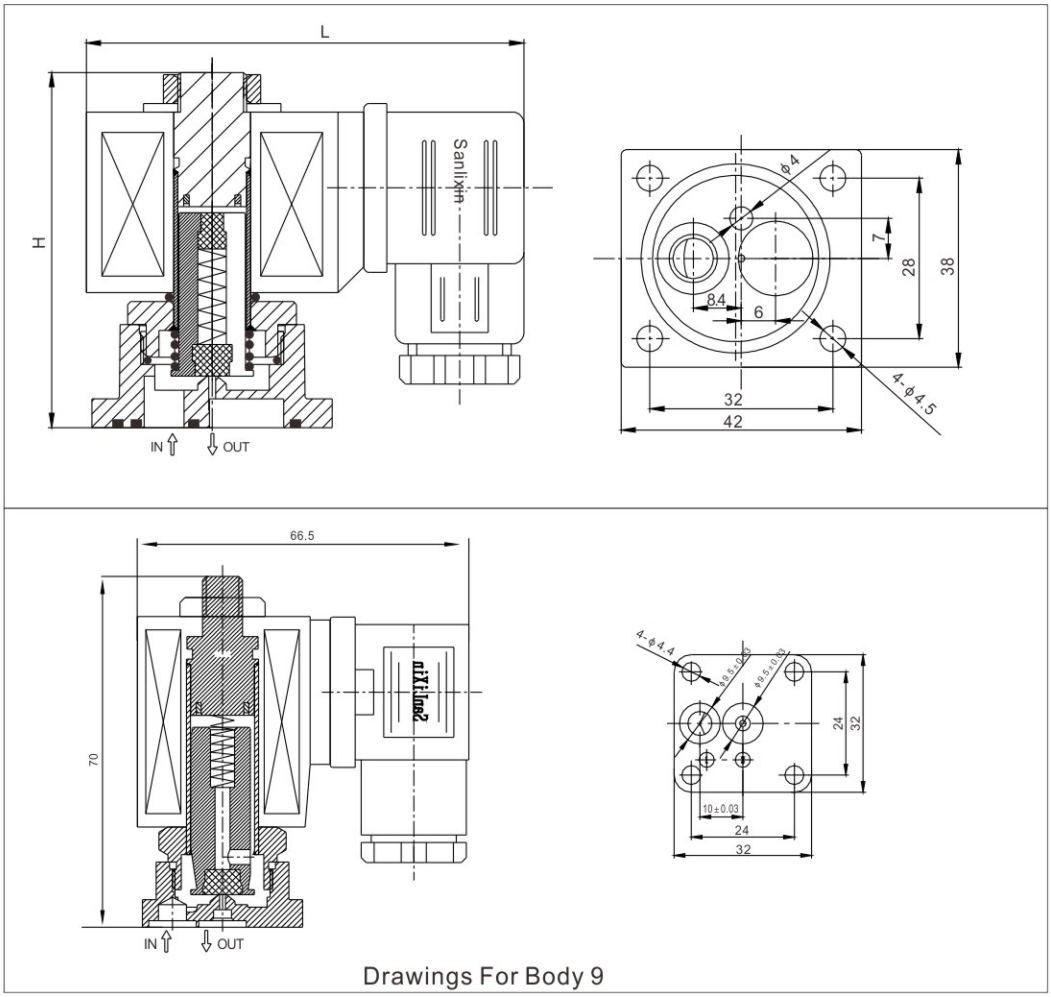

Drawings For Body 9

SLM 2/2-way direct acting compact series solenoid valve

Main Technical Parameters

1. 2/2-way solenoid valve, Closed when de-energizes, open when energized.
2. Serialized products, small in size. Lower power consumption, widely use
3. Body material: Brass, SS316
4. Plunger tube material : Brass stainless steel
5. Ambient temp: 0~65℃ fluid temp: temp: 0~120℃
6. Voltage: AC220v DC 24v/6W (other voltage can special made)
7. Flow as the arrow, mounts in any position: best position is solenoid vertical and upright direction.
8. This series valves are offered NBR VITON EPDM stc for series and diaphragm to provide on-off control of various fluids.



Solenoid Valve Numbering System for Order

	1	2	3	4	5	6	7	8	9	10
	Valve Series	Mode of Operation	Coil Type	Coils Class	Voltage	Seal Material	Body Material	Pipe Size	Orifice	Options
E.G.	**SLM**	**1**	**D**	**H**	**02**	**N**	**1**	**A**	**C2**	**L**
		1: Normally Closed	D: DIN Standard Connections, Fully Encapsulated	H: Class	02= AC220V AC230V 50/60HZ 01= AC110V AC120V 50/60HZ 13= DC24V	N= NBR V= VITON E= EPDM	1= Forged Brass 3= SS316	A= 1/8″ B= 1/4″	01=1.0 C2=1.5 02=02 C3=2.5	L= Neon Lamp D=01–410 coils (according to the customer) N= NPT
							1= Forged Brass 3= SS316	C=3/8″ D=1/2″	12=12	
								E=3/4″	20=20.0	
								G=1″	25=25.0	

SLM 2/2-way direct acting compact series solenoid valve

Valve selection list

Pipe Size	Orifice (mm)	CV Factor	Working Pressure (bar)					Coil Type	Power		Coil Class	Model Code Follows Voltage are AC220V 50/60HZ		Weight (KG)
			Min	Max					VA	W				
				Gas		Liquid			AC 220V	DC 24V				
				AC	DC	AC	DC							
1/8"	1.0	0.05	0	20	15	20	15	D	6	6	H	SLM1DH02N1A01	SLM1DH02N3A01	0.14
	1.5	0.07	0	16	13	16	13	D	6	6	H	SLM1DH02N1AC2	SLM1DH02N3AC2	
	2.0	0.13	0	13	10	13	10	D	6	6	H	SLM1DH02N1A02	SLM1DH02N3A02	
	2.5	0.17	0	10	6	10	6	D	6	6	H	SLM1DH02N1AC3	SLM1DH02N3AC3	
1/4"	1.0	0.05	0	20	15	20	15	D	6	6	H	SLM1DH02N1B01	SLM1DH02N3B01	0.13
	1.5	0.07	0	16	13	16	13	D	6	6	H	SLM1DH02N1BC2	SLM1DH02N3BC2	
	2.0	0.13	0	13	10	13	10	D	6	6	H	SLM1DH02N1B02	SLM1DH02N3B02	
	2.5	0.17	0	10	6	10	6	D	6	6	H	SLM1DH02N1BC3	SLM1DH02N3BC3	

Configuration dimension chart

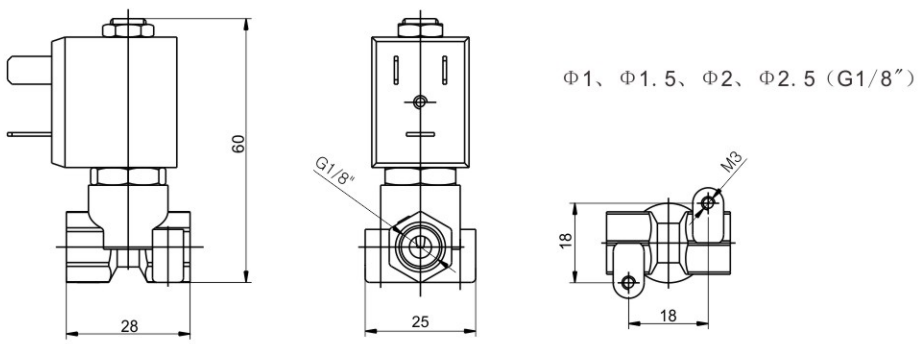

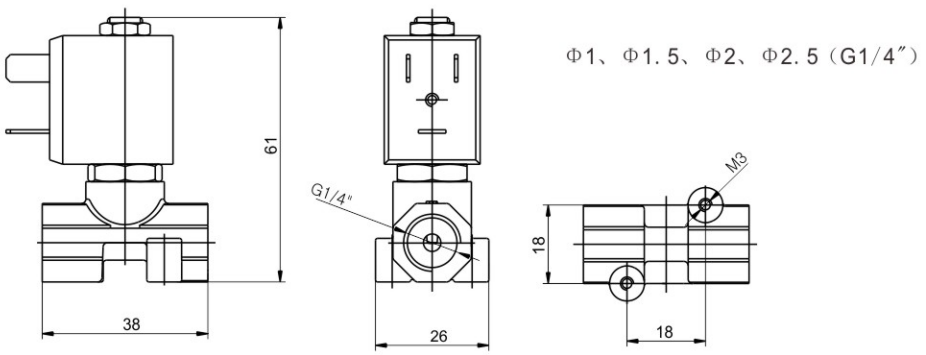

SLM 2/2-way miniature direct acting plastic solenoid valve

Product features: small size, low power, wide range of application

Body material：PPS

Material of tube：stainless steel

Ambient temp：0℃～65℃ Fluid temp：0℃～65℃

Voltage：AC220V/6VA DC24V/6W (Other voltages can be customized)

Connection mode：Quick insert（ϕ6.35mm）、G1/8

Flow as the arrow, mounts in any position;

best position is solenoid vertical and upright direction.

Seal：NBR、EPDM、VITON



Solenoid Valve Numbering System for Order

	1	2	3	4	5	6	7	8	9	10
	Valve Series	Mode of Operation	Coil Type	Coils Class	Voltage	Seal Material	Body Material	Pipe Size	Orifice	Options
E.G.	SLM	1	D	H	02	N	7	A	C2	N
		1: Normally Closed	D: DIN Standard Connections, Fully Encapsulated	H= H Class	02= AC220V AC230V 50/60HZ 13= DC24V For other voltages, please consult the company	N=NBR V=VITON E=EPDM	7= Plastic	A=1/8" Y=Quick insert (1/4")	C3=2.5	L=Neon Lamp N=NPT

SLM 2/2-way miniature direct acting plastic solenoid valve

Valve selection list

Pipe Size	Orifice mm	CV Factor	Operating pressure differential (kgf/cm²)					Coil Type	Power consumption		Coil Class	Model Code Follows Voltage are AC220V 50/60HZ	Weight Kg
			Min.	Max.					VA	W			
				Air		Liquids			AC 220V	DC 24V			
				AC	DC	AC	DC						
NPT 1/8"	2.5	0.17	0	10	6	10	6	D	6	6	H	SLM1DH02N7AC3N	0.12
	2.5	0.17	0	10	6	10	6	D	6	6	H	SLM1DH02E7AC3N	0.12
	2.5	0.17	0	10	6	10	6	D	6	6	H	SLM1DH02V7AC3N	0.12
1/4" Quick insert	2.5	0.17	0	10	6	10	6	D	6	6	H	SLM1DH02N7YC3	0.12
	2.5	0.17	0	10	6	10	6	D	6	6	H	SLM1DH02E7YC3	0.12
	2.5	0.17	0	10	6	10	6	D	6	6	H	SLM1DH02V7YC3	0.12

External Dimensions

1/4 Quick insert (ϕ6. 35mm)

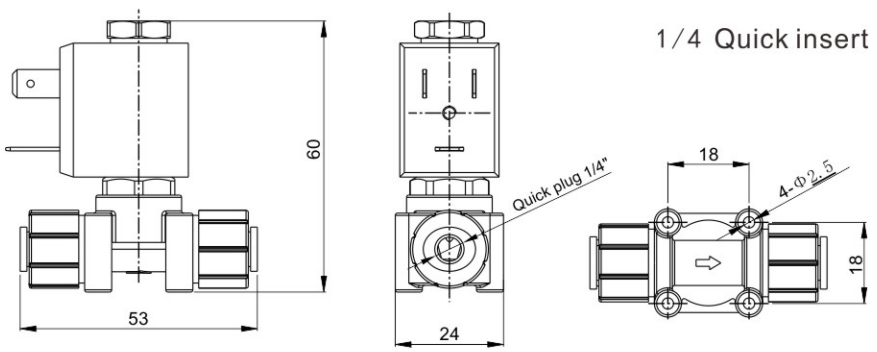

NPT1/8"

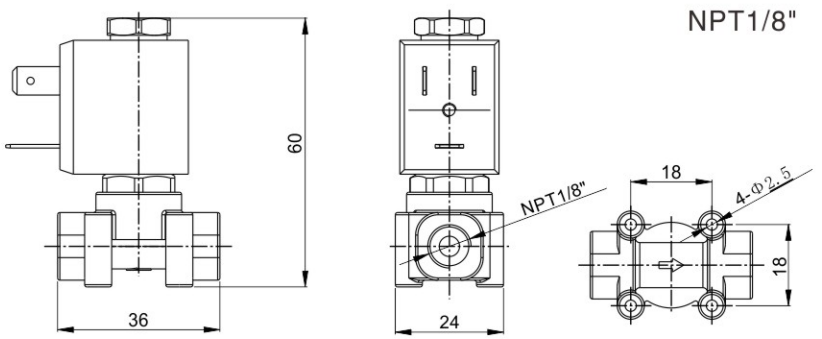

SLM 2/2-way pilot solenoid valve series

Product features: small size, low power, wide range of application

Body material: Brass, stainless steel

Material of magnetic separator: stainless steel

Ambient temp: 0℃~65℃, Fluid temp: 0℃~120℃

Voltage: AC220V/6VA DC24V/6W (Other voltages can be customized)

Flow as the arrow, mounts in any position;

best position is solenoid vertical and upright direction.

Sealing: NBR、EPDM、VITON



Valve selection list

Pipe Size	Orifice mm	CV Factor	Operating pressure differential (kgf/cm²) Min.	Max. Air AC	Max. Air DC	Max. Liquids AC	Max. Liquids DC	Coil Type	Power consumption VA AC 220V	Power consumption W DC 24V	Coil Class	Model code AxBxH	Model Code Follows Voltage are AC220V 50/60HZ Brass	Model Code Follows Voltage are AC220V 50/60HZ Stainless steel	Weight Kg
3/8"	12	2.4	0.5	16	10	16	10	D	6	6	F	62x43x84	SLM1DH02N1C12	SLM1DH02N3C12	0.44
	12	2.4	0.5	16	10	16	10	D	6	6	F	62x43x84	SLM1DH02E1C12	SLM1DH02E3C12	
	12	2.4	0.5	16	10	16	10	D	6	6	F	62x43x84	SLM1DH02V1C12	SLM1DH02V3C12	
1/2"	12	2.4	0.5	16	10	16	10	D	6	6	F	62x43x84	SLM1DH02N1D12	SLM1DH02N3D12	0.42
	12	2.4	0.5	16	10	16	10	D	6	6	F	62x43x84	SLM1DH02E1D12	SLM1DH02E3D12	
	12	2.4	0.5	16	10	16	10	D	6	6	F	62x43x84	SLM1DH02V1D12	SLM1DH02V3D12	
3/4"	20	6.0	0.5	16	10	16	10	D	6	6	F	80x60x93	SLM1DH02N1E20	SLM1DH02N3E20	0.8
	20	6.0	0.5	16	10	16	10	D	6	6	F	80x60x93	SLM1DH02E1E20	SLM1DH02E3E20	
	20	6.0	0.5	16	10	16	10	D	6	6	F	80x60x93	SLM1DH02V1E20	SLM1DH02V3E20	
1"	25	8.5	0.5	16	10	16	10	D	6	6	F	100x80x102	SLM1DH02N1G25	SLM1DH02N3G25	1.0
	25	8.5	0.5	16	10	16	10	D	6	6	F	100x80x102	SLM1DH02E1G25	SLM1DH02E3G25	
	25	8.5	0.5	16	10	16	10	D	6	6	F	100x80x102	SLM1DH02V1G25	SLM1DH02V3G25	

External Dimensions

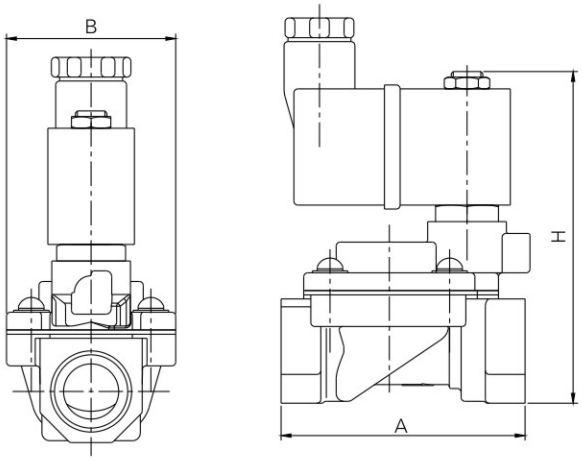

SLM 2/2-way pilot solenoid valve series

Product features: small size, low power, wide range of application

Body material: Brass, stainless steel

Material of magnetic separator: stainless steel

Ambient temp: 0℃~65℃, Fluid temp: 0℃~120℃

Voltage: AC220V/12VA DC24V/12W (Other voltages can be customized)

Flow as the arrow, mounts in any position;

best position is solenoid vertical and upright direction.

Sealing: NBR、EPDM、VITON



Valve selection list

Pipe Size	Orifice mm	CV Factor	Operating pressure differential (kgf/cm²) Min.	Max. Air AC	Max. Air DC	Max. Liquids AC	Max. Liquids DC	Coil Type	Power VA AC 220 V	Power W DC 24 V	Coil Class	Model code AxBxH	Model Code Follows Voltage are AC220V 50/60HZ	Weight Kg
3/8"	12	2.4	0.5	10	10	10	10	D	12	12	H	62×43×84	SLM2DH02N1C12	0.44
	12	2.4	0.5	10	10	10	10	D	12	12	H	62×43×84	SLM2DH02E1C12	
	12	2.4	0.5	10	10	10	10	D	12	12	H	62×43×84	SLM2DH02V1C12	
1/2"	12	2.4	0.5	10	10	10	10	D	12	12	H	62×43×84	SLM2DH02N1D12	0.42
	12	2.4	0.5	10	10	10	10	D	12	12	H	62×43×84	SLM2DH02E1D12	
	12	2.4	0.5	10	10	10	10	D	12	12	H	62×43×84	SLM2DH02V1D12	
3/4"	20	6.0	0.5	10	10	10	10	D	12	12	H	80×60×93	SLM2DH02N1E20	0.8
	20	6.0	0.5	10	10	10	10	D	12	12	H	80×60×93	SLM2DH02E1E20	
	20	6.0	0.5	10	10	10	10	D	12	12	H	80×60×93	SLM2DH02V1E20	
1"	25	8.5	0.5	10	10	10	10	D	12	12	H	100×80×102	SLM2DH02N1G25	1.0
	25	8.5	0.5	10	10	10	10	D	12	12	H	100×80×102	SLM2DH02E1G25	
	25	8.5	0.5	10	10	10	10	D	12	12	H	100×80×102	SLM2DH02V1G25	

External Dimensions

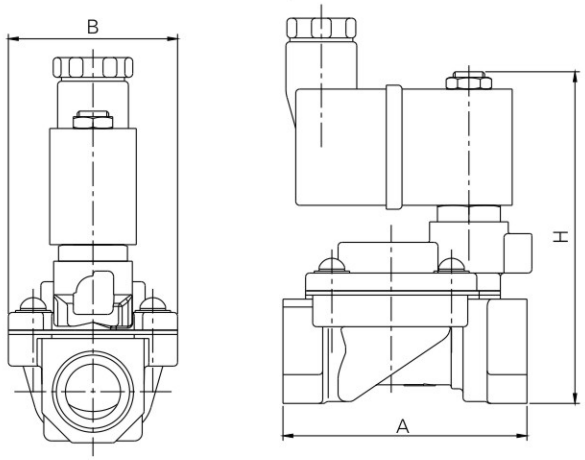

SLVM 3/2-way direct acting compact series solenoid valve

Main Technical Parameters

3/2-way solenoid valve, Closed when de-energizes,
open when energized.
Serialized products, small in size. Lower power, widely use
Body material: Brass、stainless steel
Ambient temp: 0~65℃ fluid temp: temp: 0~120℃
Voltage: AC220v DC 24v/6W (other voltage can special mac



SLVM1 Normally Closed
SLVM2 Normally Open
SLVM3 Diverting
SLVM4 Universal

Solenoid Valve Numbering System for Order

	1	2	3	4	5	6	7	8	9	10
	Valve Series	Mode of Operation	Coil Type	Coils Class	Voltage	Seal Material	Body Material	Pipe Size	Orifice	Options
E.G.	**SLVM**	**1**	**D**	**H**	**02**	**N**	**1**	**A**	**C2**	**L**
		1: Normally Closed 2: Normally Open 3: Diverting 4: Universal	D: DIN Standard Connections, Fully Encapsulated	H: Class	02= AC220V 13= DC24V	N= NBR E= EPDM V= VITON	1= Forged Brass 3= SS316	A= 1/8″ B= 1/4″	C2=1.5 02=02 C3=2.5 Top: ϕ 1.2	L= Neon Lamp N= NPT M= Top M5

SLVM 3/2-way direct acting compact series solenoid valve

SLVM1 Normally Closed

Pipe Size	Orifice mm	Top Orifice mm	CV	Working Pressure(bar)					Coil Type	Power		Coil Class	Model Code Follows Voltage are AC220V 50/60HZ		Weight (KG)
				Min	Max					VW	W				
					Gas		Liquid			AC 220V	DC 24V				
					AC	DC	AC	DC					Brass	Stainless steel	
1/8”	1.5	1.2	0.07	0	9	9	9	9	D	12	12	H	SLVM1DH02N1AC2	SLVM1DH02N3AC2	0.14
	2.0	1.2	0.13	0	5	5	5	5	D	12	12	H	SLVM1DH02N1A02	SLVM1DH02N3A02	
	2.5	1.2	0.17	0	3	3	3	3	D	12	12	H	SLVM1DH02N1AC3	SLVM1DH02N3AC3	
1/4”	1.5	1.2	0.07	0	9	9	9	9	D	12	12	H	SLVM1DH02N1BC2	SLVM1DH02N3BC2	0.13
	2.0	1.2	0.13	0	5	5	5	5	D	12	12	H	SLVM1DH02N1B02	SLVM1DH02N3B02	
	2.5	1.2	0.17	0	3	3	3	3	D	12	12	H	SLVM1DH02N1BC3	SLVM1DH02N3BC3	

Free Exhaust

De-energized

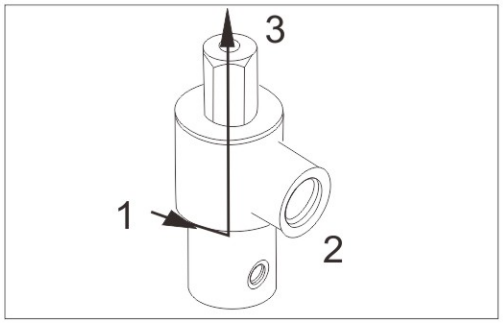

Energized

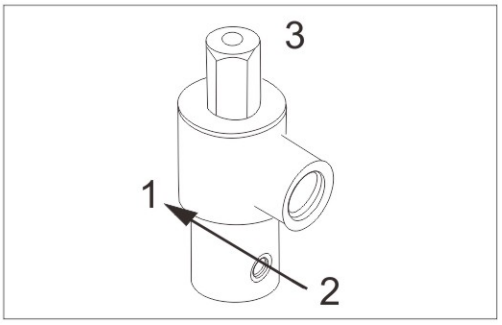

Configuration dimension chart

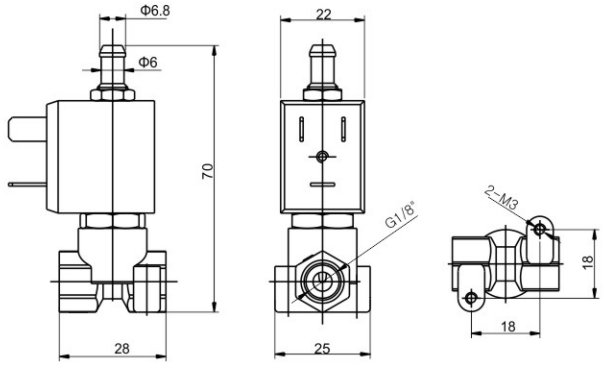

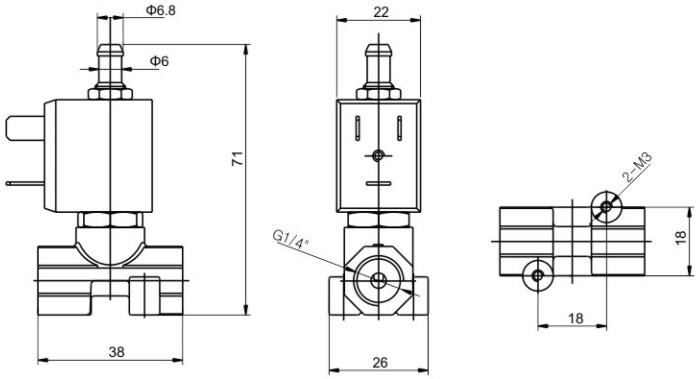

SLVM 3/2-way direct acting compact series solenoid valve

SLVM2 Normally open

Pipe Size	Orifice mm	Top Orifice mm	CV	Working Pressure(bar)					Coil Type	Power		Coil Class	Model Code Follows Voltage are AC220V 50/60HZ		Weight (KG)
				Min	Max					VW	W				
					Gas		Liquid			AC 220V	DC 24V				
					AC	DC	AC	DC					Brass	Stainless steel	
1/8"	1.5	1.2	0.07	0	8	7	8	7	D	12	12	H	SLVM2DH02N1AC2	SLVM2DH02N3AC2	0.14
	2.0	1.2	0.13	0	8	7	8	7	D	12	12	H	SLVM2DH02N1A02	SLVM2DH02N3A02	
	2.5	1.2	0.17	0	8	7	8	7	D	12	12	H	SLVM2DH02N1AC3	SLVM2DH02N3AC3	
1/4"	1.5	1.2	0.07	0	8	7	8	7	D	12	12	H	SLVM2DH02N1BC2	SLVM2DH02N3BC2	0.13
	2.0	1.2	0.13	0	8	7	8	7	D	12	12	H	SLVM2DH02N1B02	SLVM2DH02N3B02	
	2.5	1.2	0.17	0	8	7	8	7	D	12	12	H	SLVM2DH02N1BC3	SLVM2DH02N3BC3	

Normally Open

De-energized

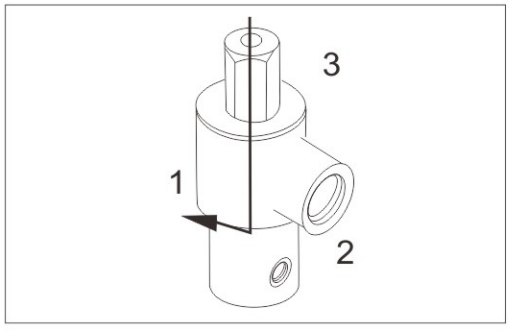

Energized

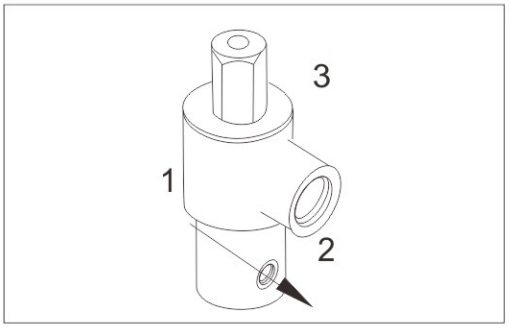

Configuration dimension chart

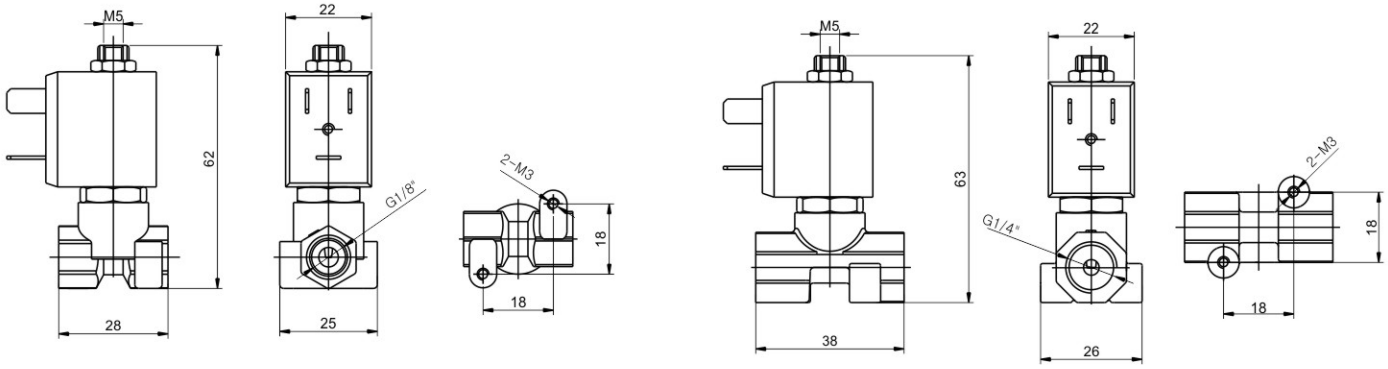

SLVM 3/2-way direct acting compact series solenoid valve

SLVM3 Diverting

Pipe Size	Orifice mm	Top Orifice mm	CV	Working Pressure(bar)					Coil Type	Power		Coil Class	Model Code Follows Voltage are AC220V 50/60HZ		Weight (KG)
				Min	Max					VW	W				
					Gas		Liquid			AC 220V	DC 24V				
					AC	DC	AC	DC					Brass	Stainless steel	
1/8"	1.5	1.2	0.07	0	16	13	16	13	D	6	6	H	SLVM3DH02N1AC2	SLVM3DH02N3AC2	0.14
	2.0	1.2	0.13	0	13	10	13	10	D	6	6	H	SLVM3DH02N1A02	SLVM3DH02N3A02	
	2.5	1.2	0.17	0	10	6	10	6	D	6	6	H	SLVM3DH02N1AC3	SLVM3DH02N3AC3	
1/4"	1.5	1.2	0.07	0	16	13	16	13	D	6	6	H	SLVM3DH02N1BC2	SLVM3DH02N3BC2	0.13
	2.0	1.2	0.13	0	13	10	13	10	D	6	6	H	SLVM3DH02N1B02	SLVM3DH02N3B02	
	2.5	1.2	0.17	0	10	6	10	6	D	6	6	H	SLVM3DH02N1BC3	SLVM3DH02N3BC3	

Diverting

De-energized

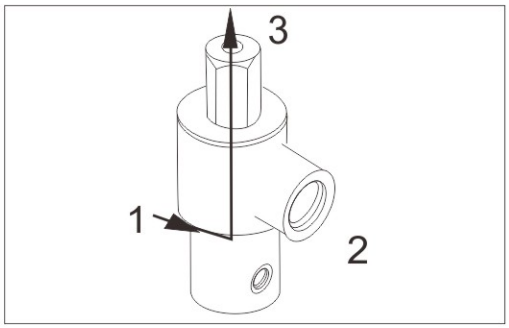

Energized

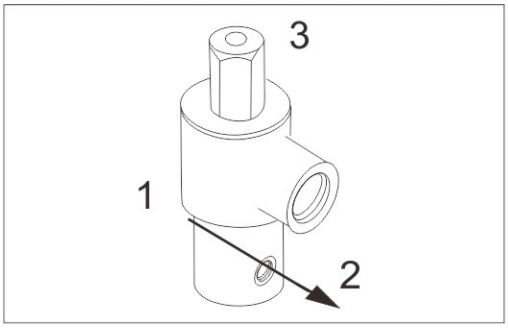

SLVM 3/2-way direct acting compact series solenoid valve

SLVM4 Universal

Pipe Size	Orifice mm	Top Orifice mm	CV	Working Pressure(bar)					Coil Type	Power		Coil Class	Model Code Follows Voltage are AC220V 50/60HZ		Weight (KG)
				Min	Max					VW	W				
					Gas		Liquid			AC 220V	DC 24V				
					AC	DC	AC	DC					Brass	Stainless steel	
1/8"	1.5	1.2	0.07	0	7	5	7	5	D	12	12	H	SLVM4DH02N1AC2	SLVM4DH02N3AC2	0.14
	2.0	1.2	0.13	0	3	3	3	3	D	12	12	H	SLVM4DH02N1A02	SLVM4DH02N3A02	
	2.5	1.2	0.17	0	2	2	2	2	D	12	12	H	SLVM4DH02N1AC3	SLVM4DH02N3AC3	
1/4"	1.5	1.2	0.07	0	7	5	7	5	D	12	12	H	SLVM4DH02N1BC2	SLVM4DH02N3BC2	0.13
	2.0	1.2	0.13	0	3	3	3	3	D	12	12	H	SLVM4DH02N1B02	SLVM4DH02N3B02	
	2.5	1.2	0.17	0	2	2	2	2	D	12	12	H	SLVM4DH02N1BC3	SLVM4DH02N3BC3	

Universal

De-energized

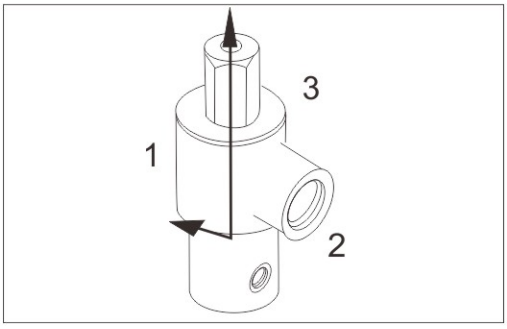

Energized

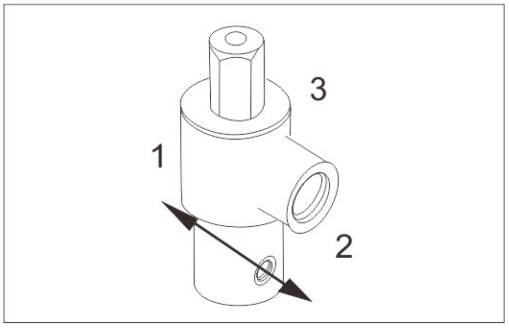

SLMA Pilot operated piston solenoid valve · Normally Closed

SLMA series 2/2-way solenoid valve,closed when de-energized,open when energized.
Piston type pilot valve, small in size, large flow rate, widely use

Body material：Brass、Stainless steel

Ambient temp：0℃~65℃

Voltage：AC220/230V/240V/110V/240V 50/60HZ
DC24V/12V ±10%

Sealing：NBR、VITON、EPDM etc

Flow as the arrow, mounts in any position;
best position is solenoid vertical and upright direction.



Solenoid Valve Numbering System for Order

	1	2	3	4	5	6	7	8	9	10
	Valve Series	Mode of Operation	Coil Type	Coils Class	Voltage	Seal Material	Body Material	Pipe Size	Orifice	Options
E.G.	SLMA	1	D	H	02	N	1	D	16	☐
		1: Normally Closed	D: DIN Standard Connections, Fully Encapsulated	H= H Class	02= AC220V AC230V 01= AC110V AC120V 12=DC12V 13=DC24V	N=NBR V=VITON E=EPDM	1= Forged Brass 4= SS304	D=1/2 " E=3/4 " G=1 "	16=16.0 20=20.0 25=25.0	L= Neon Lamp N= NPT

SLMA Pilot operated piston solenoid valve · Normally Closed

Valve selection list

Pipe Size	Orifice mm	CV Factor	Operating pressure differential (kgf/cm²)			Coil Type	Power		Coil Class	Model code AxBxH	Model Code Follows Voltage are AC220V 50/60HZ	Weight Kg
			Min.	Max.			VA	W				
				Air	Liquids		AC 220 V	DC 24 V			Stainless steel	
1/2 "	16	4.8	0.5	10	10	D	12	12	F	70×46×98	SLMA1DH02N4D16	1.0
	16	4.8	0.5	10	10	D	12	12	F	70×46×98	SLMA1DH02E4D16	1.0
	16	4.8	0.5	10	10	D	12	12	F	70×46×98	SLMA1DH02V4D16	1.0
3/4 "	20	7.6	0.5	10	10	D	12	12	F	82×53×107	SLMA1DH02N4E20	1.2
	20	7.6	0.5	10	10	D	12	12	F	82×53×107	SLMA1DH02E4E20	1.2
	20	7.6	0.5	10	10	D	12	12	F	82×53×107	SLMA1DH02V4E20	1.2
1 "	25	12	0.5	10	10	D	12	12	F	92×59×115	SLMA1DH02N4G25	1.4
	25	12	0.5	10	10	D	12	12	F	92×59×115	SLMA1DH02E4G25	1.4
	25	12	0.5	10	10	D	12	12	F	92×59×115	SLMA1DH02V4G25	1.4

External Dimensions

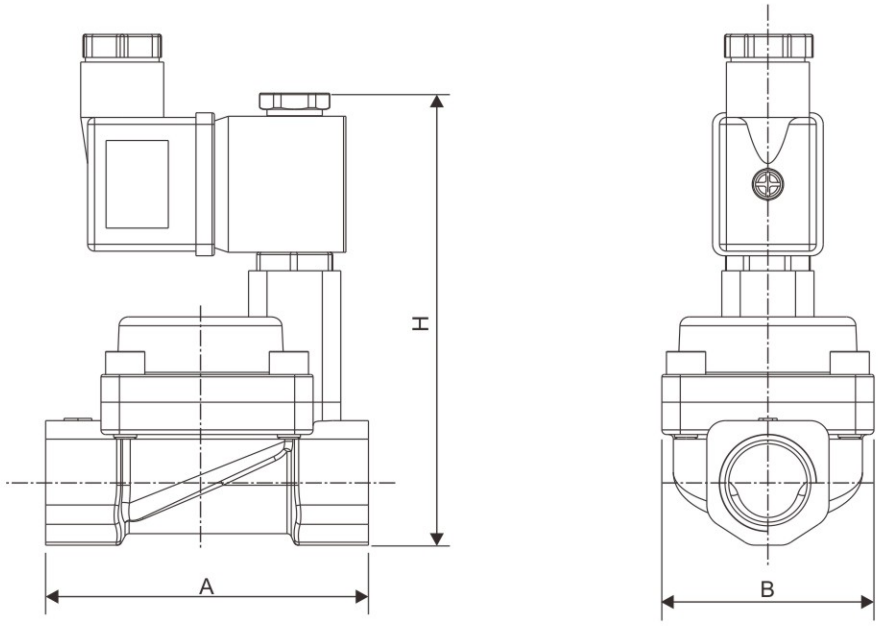

DMF-Z right angle type latching solenoid valve

Product Purpose

Pulse solenoid valve (also called diaphragm valve),it is the ″switch″ . Injection control instrument by pulse output signal of the control of the the filter bag one row (room) injection out dust. Make the resistance of the filter to keep in the scope of the set inside, in order to ensure that the filter processing power and dust collecting efficiency.

DMF-Z type pulse valve as right Angle type valve, The Angle between import and export is 90 ° , Suitable for air bag dust and the installation of the wind spray connection. Airflow unobstructed, can to meet the requirements of the clear grey gas pulse.





Working Principle

The pulse valve diaphragm is divided into two, gas chamer(Front & back), when switching compressed air,Compressed air through the throttle orifice into the gas chamber after at this time of the gas chamber pressure will diaphragm components.

Close to the valve outlets, pulse valve is in "closed" status.Pulse injection control instrument signal that the pulse valve bit back, after the gas Room put stomatal open, and the gas chamber pressure loss after quickly, diaphragm components moved, the compressed air.A valve lose export injection, pulse valve in the "open" status.Pulse injection control instrument signal disappears, solenoid pulse valve bit reset, gas after.

Room put stomatal closure, the gas chamber pressure after increase is clingy valve diaphragm components of outlets, solenoid pulse valve and in "closed" status.

Model Implication

DMF — Z — X — S

DMF	Z	X	S
Electromagnetic pulse solenoid valve	Right angle type	Orifice size	Double diaphram

Valve Selection List

Cale	Model	Orifice size		Number Of Seal	Inlet Pipe Size	Outlet Pipe Size	Weight (KG)
		Metric	Inch				
1	DMF-Z-20	ϕ20	3/4”	1	G3/4 ″	G3/4 ″	0.75
2	DMF-Z-25	ϕ25	1”	1	G1 ″	G1″	0.7
3	DMF-Z-40S	ϕ40	1 1/2”	2	G1 1/2 ″	G1 1/2 ″	1.3
4	DMF-Z-50S	ϕ50	2”	2	G2 ″	G2 ″	2.65
5	DMF-Z-62S	ϕ62	2 1/2”	2	G2 1/2 ″	G2 1/2 ″	2.3

DMF-Z right angle type latching solenoid valve

Construction externla dimensions chart

1.Stationary Core
2.Plunger
3.Air bleed hole
4.Bonnet
5.Diaphragm
6.Main valve port
7.Valve body

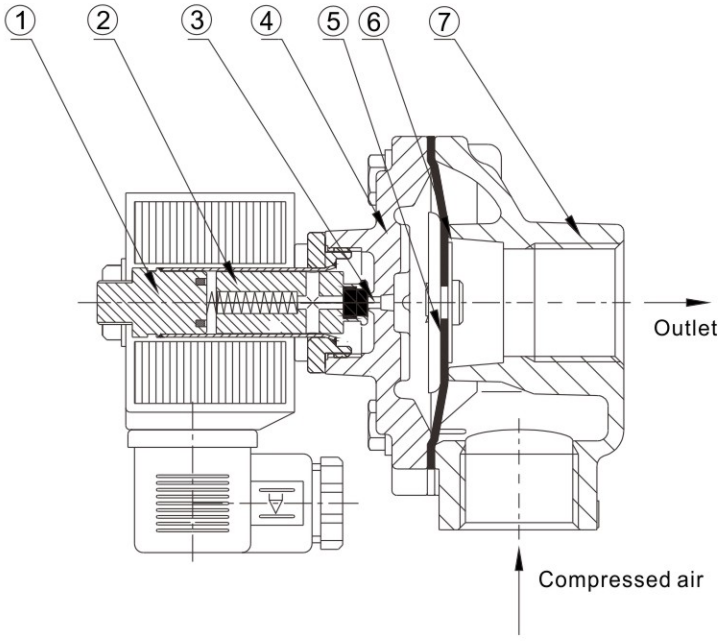

Technical parametes

Working pressure：0.035MPa ~ 0.8MPa
Working：Clean air
Voltage： AC220V/230V/240V/110V/24V 50/60HZ 10.5VA DC24V/12V 18.5W
Ambient temperature：0℃ ~ 65℃
The lifetime：1000000 or 3 years

Material

Valve body：Aluminum alloy
Pilot Components:IJ117
Diaphragm：NBR
Spring： SS302
Fastener： SS304

DMF-Z right angle type latching solenoid valve

Structure Size

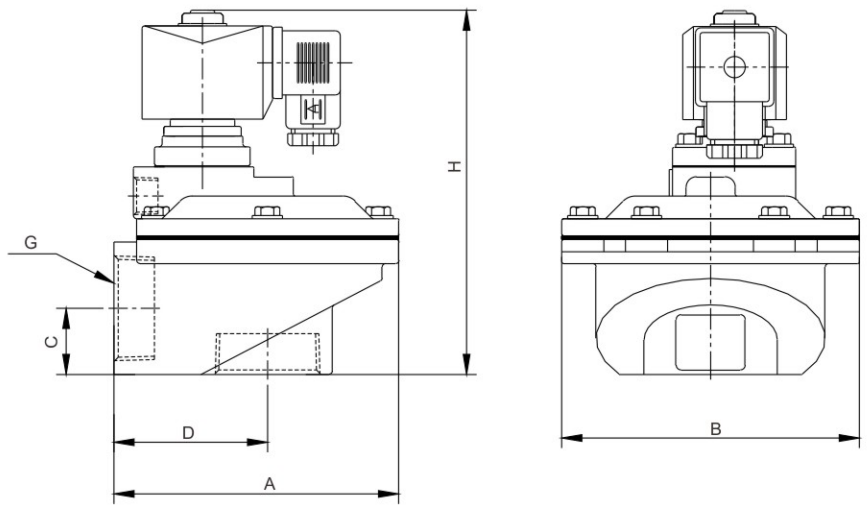

Model	A	B	C	D	G	H
DMF-Z-20	89	75	21	51	G3/4	123
DMF-Z-25	89	75	21	51	G1"	123
DMF-Z-40S	132	132	30	71	1 1/2"	163
DMF-Z-50S	168	168	45	95	2"	206
DMF-Z-62S	168	168	45	95	2 1/2"	206

Installation method

Solenoid pulse valve input(IN) and air bag is connected to the metal the antput termind filter in connection with spray wind connection betueen thread fill in seal materialc teflon or seal pustes it's good to tighten the seal.

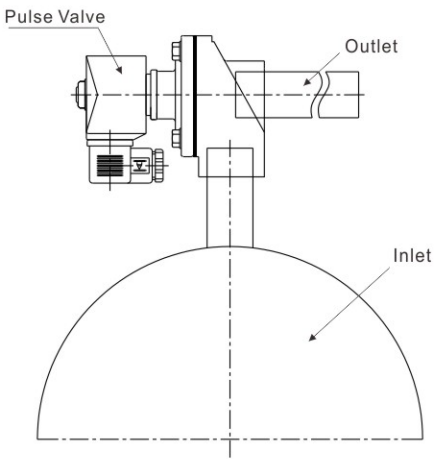

SBD-A timing of drainage solenoid valve

Use: Universal electronic drain valve in analog circuit solid match the solenoid valve, electronic timer implementation to the timing of condensed water from compressed air system auto emissions. Drying machine is widely used in filter separator gasholder dripping feet, compressed air system components, discharge time and interval time can be adjusted according to different needs



Characteristic:

easy installation Automatic

Time interval and discharge time can be adjusted with the test button

Orifice size:3mm pressure:16bar

Heat resistance level: H class Ip65

Filter configuration ball valves, import and export into 90°C

Technology Parameters:

TIMER	TIMER
Interval time (OFF)	0.5~45min
Discharge time (ON)	0.5 ~ 10sec
Voltage	24 ~ 240V AC/DC 50/60HZ
Power	22VA
Ambient temp	−10~+60℃
IP level	Ip65
Shell material	ABS
Connect	DIN43650A
Indicator light	Electric light

Solenoid valve	SBD−A
Type	2/2−Way direct acting
Pipe size	G1/4" 3/8" 1/2"
Working Pressure	0−16bar
Fluid temp	< 80℃
Orifice size	3mm
Body material	brass
Insulation level	H class
IP level	IP65
Voltage range	± 10%

Configuration dimension chart

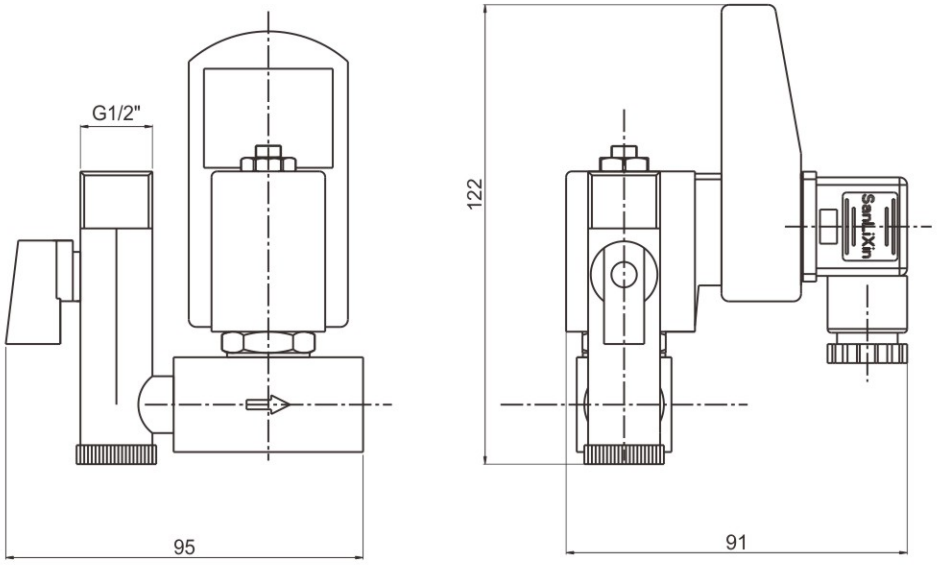

SBD-B Timing Of Drainage Solenoid Valve

Use: Universal electronic drain valve in analog circuit solid match the solenoid valve, electronic timer implementation to the timing of condensed water from compressed air system auto emissions. Drying machine is widely used in filter separator gasholder dripping feet, compressed air system components, discharge time and interval time can be adjusted according to different needs



Characteristic:

easy installation Automatic

Time interval and discharge time can be adjusted with the test button

Orifice size:3mm pressure:16bar

Heat resistance level: H class Ip65

Filter configuration ball valves, import and export into 180°C

Technology Parameters:

TIMER	TIMER
Interval time (OFF)	0.5~45min
Discharge time (ON)	0.5 ~ 10sec
Voltage	24 ~ 240V AC/DC 50/60HZ
Power	22VA
Ambient temp	–10~+60℃
IP level	Ip65
Shell material	ABS
Connect	DIN43650A
Indicator light	Electric light

Solenoid valve	SBD–B
Type	2/2–Way direct acting
Pipe size	G1/2"
Working Pressure	0–16bar
Fluid temp	< 80℃
Orifice size	3mm
Body material	brass
Insulation level	H class
IP level	IP65
Voltage range	± 10%

Configuration dimension chart

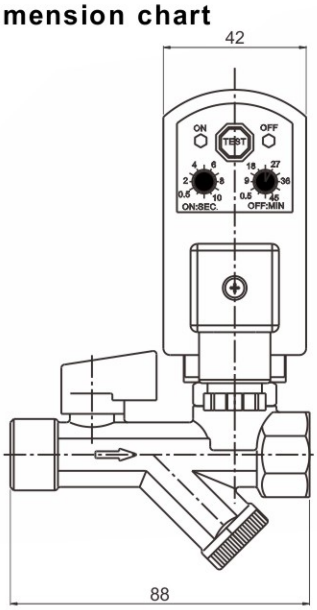

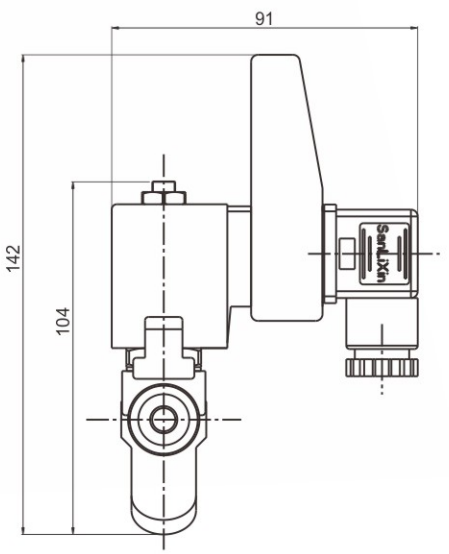

ZXF 2/2-way small solenoid axial valve · normally closed

1：2/2 way normally closed , closed when de-energized open , open when energized
2：Main characteristic :axial design, low power, small size, easy integration
3：Working pressure：0~160kgf/cm^2
4：Orifice：DN3.0、4.0、5.0、6.0、8.0mm
5：Ambient temp：-20℃~80℃
6：Voltage：DC24V、DC12V ±10%
7：Seals：EPDM、VITON、NBR
8：Body：SS316



A type



W type

Solenoid Axial Valve Numbering System for Order

1	2	3	4	5	6	7	8	9	10
Valve Series	Mode of Operation	Coil Type	Coils Class	Voltage	Seal Material	Body Material	Pipe Size	Orifice	Options
ZXF	1	W	H	13	V	3	B	06	□
	1= Normally Closed	W=Metallic Housing lead wires A=Metallic Housing DIN standard	H=H Class	13=DC24V 12=DC12V	V=VITON T=PTFE	3= SS316	A=1/8" B=1/4" C=3/8" D=1/2"	03=3.0 04=4.0 05=5.0 06=6.0 08=8.0	N=NPT K=Mounting Bracket

External Dimensions Chart

Φ3.0–Φ8.0（1/8"–1/2"）

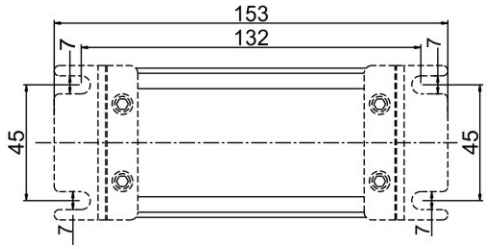

A type

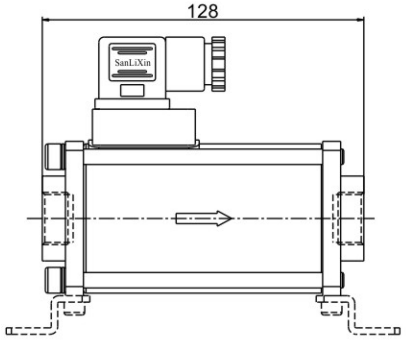

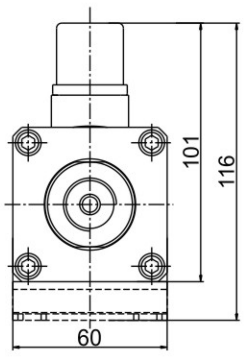

ZXF 2/2-way small solenoid axial valve · normally closed

Valve Selection List

Pipe Size	Orifice mm	CV Factor	Operating pressure differential (kgf/cm²)			Coil Type	Coil Class	Power W	Max. Fluids Temp. ℃	Model Code	Weight KG
			Min.	Max.							
				Forward pressure	Reverse pressure						
1/8"	3	0.3	0	160	4	A	H	25	120	ZXF1AH13T3A03	
1/4"	3	0.3	0	160	4	A	H	25	120	ZXF1AH13T3B03	
3/8"	3	0.3	0	160	4	A	H	25	120	ZXF1AH13T3C03	
1/2"	3	0.3	0	160	4	A	H	25	120	ZXF1AH13T3D03	
1/8"	4	0.6	0	130	4	A	H	25	120	ZXF1AH13T3A04	
1/4"	4	0.6	0	130	4	A	H	25	120	ZXF1AH13T3B04	
3/8"	4	0.6	0	130	4	A	H	25	120	ZXF1AH13T3C04	
1/2"	4	0.6	0	130	4	A	H	25	120	ZXF1AH13T3D04	
1/8"	5	0.65	0	120	4	A	H	25	120	ZXF1AH13V3A05	
1/4"	5	0.65	0	120	4	A	H	25	120	ZXF1AH13V3B05	2.3
3/8"	5	0.65	0	120	4	A	H	25	120	ZXF1AH13V3C05	
1/2"	5	0.65	0	120	4	A	H	25	120	ZXF1AH13V3D05	
1/8"	6	0.8	0	110	4	A	H	25	120	ZXF1AH13V3A06	
1/4"	6	0.8	0	110	4	A	H	25	120	ZXF1AH13V3B06	
3/8"	6	0.8	0	110	4	A	H	25	120	ZXF1AH13V3C06	
1/2"	6	0.8	0	110	4	A	H	25	120	ZXF1AH13V3D06	
1/8"	8	1.2	0	90	4	A	H	25	120	ZXF1AH13V3A08	
1/4"	8	1.2	0	90	4	A	H	25	120	ZXF1AH13V3B08	
3/8"	8	1.2	0	90	4	A	H	25	120	ZXF1AH13V3C08	
1/2"	8	1.2	0	90	4	A	H	25	120	ZXF1AH13V3D08	

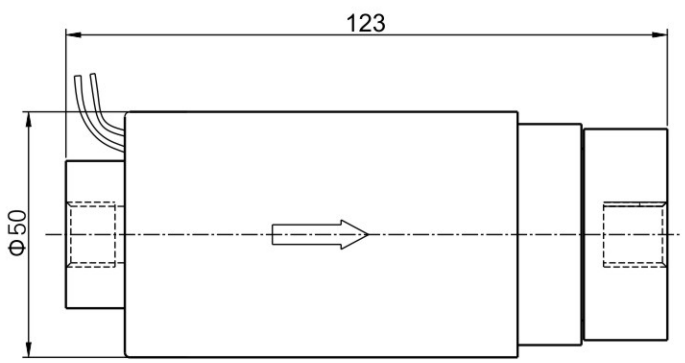

W type

ZXF 2/2-way solenoid axial valve · normally closed

1：2/2 way normally closed , closed when de-energized open , open when energized
2：Working pressure： 0 ~64 kgf/cm^2
3：Ambient temp： 0~65 ℃
4：Flow as the arrow ,mounts in any position ; best position is solenoid vertical and upright direction
5：Voltage： AC220V 50HZ DC24V +10%~-10%
6：Seals： PU、EPDM、VITON、NBR
7：Body：Forged Brass、Stainless steel



Solenoid Axial Valve Numbering System for Order

1	2	3	4	5	6	7	8	9	10
Valve Series	Mode of Operation	Coil Type	Coils Class	Voltage	Seal Material	Body Material	Pipe Size	Orifice	Options
ZXF	1	A	H	02	P	1	D	16	□
	1= Normally Closed	A=Metallic Housing DIN standard	H=H Class	02= AC220V 13= DC24V	P=PU E=EPDM V=VITON N=NBR	1=Forged Brass 4=SS304	B=1/4" C=3/8" D=1/2"	10=10.0	L=Neon Lamp N=NPT K=Mounting Bracket
							C=3/8" D=1/2"	16=16.0	
							E=3/4"	17=17.0	
							G=1"	25=25.0	
							H=1-1/4" J=1-1/2"	30=30.0	

Configuration dimension chart

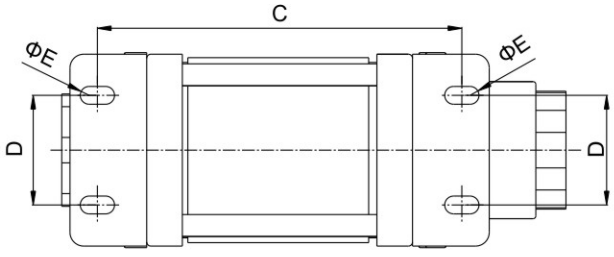

Model	A	B	C	D	E	H
ZXF-10	162.5	60	125.5	30	6.5	115
ZXF-16	184	70	133	40	6.5	126
ZXF-17	215	80	148	45	8.5	144
ZXF-25	246	90	178	50	8.5	154
ZXF-30	258	125	180	92	13	191

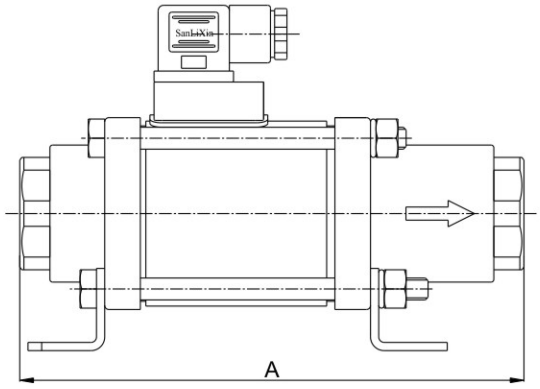

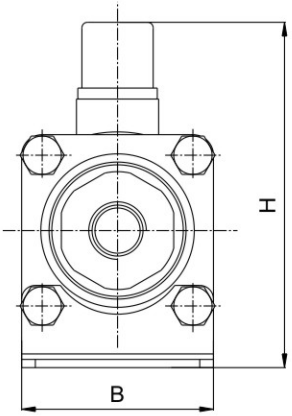

ZXF 2/2-way solenoid axial valve · normally closed

Valve Selection List

Pipe Size	Orifice mm	CV Factor	Operating pressure differential (kgf/cm^2)					Coil Type	Coil Class	Power		Max. Fluids Temp. ℃	Model Code 220VAC Seal:PU		Weight KG
			Min.	Max.						VA	W				
				Air		Opposite pressure				AC 220V	DC 24V				
				AC	DC	AC	DC						Brass	Stainless steel	
1/4"	10	2.5	0	64	64	16	16	A	H	42	42	120	ZXF1AH02V1B10	ZXF1AH02V4B10	2.45
3/8"	10	2.5	0	64	64	16	16	A	H	42	42	120	ZXF1AH02V1C10	ZXF1AH02P4C10	2.4
1/2"	10	2.5	0	64	64	16	16	A	H	42	42	120	ZXF1AH02V1D10	ZXF1AH02P4D10	2.4
3/8"	16	5.5	0	64	64	16	16	A	H	50	50	120	ZXF1AH02V1C16	ZXF1AH02P4C16	3.5
1/2"	16	5.5	0	64	64	16	16	A	H	50	50	120	ZXF1AH02V1D16	ZXF1AH02P4D16	3.45
3/4"	17	7.5	0	64	64	16	16	A	H	57	57	120	ZXF1AH02V1E17	ZXF1AH02P4E17	5.3
1"	25	13	0	64	64	16	16	A	H	77	77	120	ZXF1AH02V1G25	ZXF1AH02P4G25	7.8
1–1/4"	30	16	0	64	64	16	16	A	H	100	100	120	——	ZXF1AH02P4H30	14.4
1–1/2"	30	16	0	64	64	16	16	A	H	100	100	120	——	ZXF1AH02P4J30	14.5

ZXF 2/2-way solenoid axial valve · normally open

1: 2-Way normally open solenoid valve, Open when de-energized, Closed when energized.

*2:*Working pressure：0~64kgf/cm^2

*3:*Ambient temp：0℃~65℃

*4:*Voltage：AC220V DC24V ±10%

*5:*Seals：PU、EPDM、VITON、NBR

*6:*Body：Forged Brass、Stainless steel

The valve adopts pressure balance design, zero pressure start, and no minimum pressure difference is required; The back pressure is tightly sealed without any leakage; Compact structure, can be applied to the treatment of highly viscous and highly polluting media.



Solenoid Axial Valve Numbering System for Order

1	2	3	4	5	6	7	8	9	10
Valve Series	Mode of Operation	Coil Type	Coils Class	Voltage	Seal Material	Body Material	Pipe Size	Orifice	Options
ZXF	2	A	H	02	V	1	D	17	□
	2= Normally Open	A=Metallic Housing DIN standard	H= HClass	02= AC220V 13=DC24V	P=PU E=EPDM V=VITON N=NBR	1= Forged Brass 4= Ss304	B=1/4" C=3/8" D=1/2"	10=10.0	L= Neon Lamp N= NPT
							C=3/8" D=1/2	16=16.0	

Model	A	B	C	D	E	H
ZXF2-10	162.5	60	125.5	30	6.5	115
ZXF2-15	184	70	133	40	6.5	126

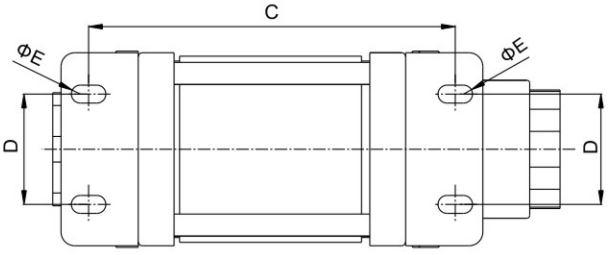

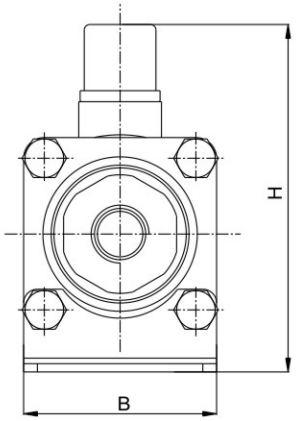

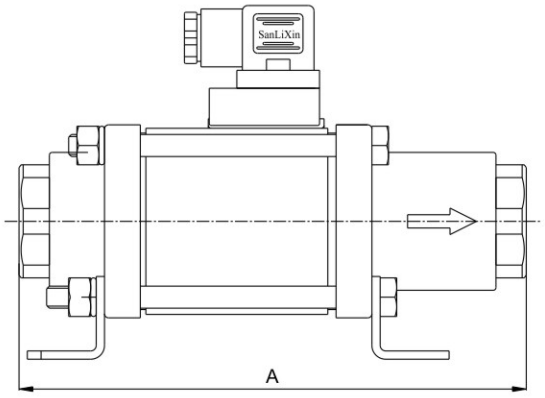

ZXF 2/2-way solenoid axial valve · normally open

Valve Selection List

Pipe Size	Orifice mm	CV Factor	Operating pressure differential (kgf/cm²)					Coil Type	Coil Class	Power		Max. Fluids Temp. ℃	Model Code 220VAC 50Hz		Weight KG
			Min.	Max.						VA	W				
				AC	DC	Opposite pressure				AC 220V	DC 24V		Brass	Stainless steel	
						AC	DC								
1/4"	10	2.5	0	64	64	16	16	A	H	42	42	120	ZXF2AH02V1B10	ZXF2AH02V4B10	2.45
3/8"	10	2.5	0	64	64	16	16	A	H	42	42	120	ZXF2AH02V1C10	ZXF2AH02V4C10	2.4
1/2"	10	2.5	0	64	64	16	16	A	H	42	42	120	ZXF2AH02V1D10	ZXF2AH02V4D10	2.4
3/8"	16	5.5	0	64	64	16	16	A	H	42	42	120	ZXF2AH02V1C16	ZXF2AH02V4C16	3.5
1/2"	16	5.5	0	64	64	16	16	A	H	42	42	120	ZXF2AH02V1D16	ZXF2AH02V4D16	3.45

ZXFV 3/2-way solenoid axial valve · normally closed

3/2–way solenoid axial valve， Pressure balanced, with spring return, cross conversion

Working pressure：0~40kgf/cm^2

Ambient temp：0℃~65℃

Voltage：AC220V/50HZ DC24V +10%~-10%

Seals：Viton

Body：Forged Brass

The valve adopts pressure balance design, zero pressure start, and no minimum pressure difference is required; The back pressure is tightly sealed without any leakage; Compact structure, can be applied to the treatment of highly viscous and highly polluting media.



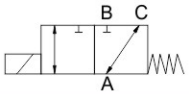

Solenoid Axial Valve Numbering System for Order

1	2	3	4	5	6	7	8	9	10
Valve Series	Mode of Operation	Coil Type	Coils Class	Voltage	Seal Material	Body Material	Pipe Size	Orifice	Options
ZXFV	**3**	**A**	**H**	**02**	**V**	**1**	**D**	**16**	
	3=3 Way	A=Metallic Housing DIN standard	H=H Class	02=AC220V 13=DC24V	V=VITON E=EPDM	1=Forged Brass	C=3/8" D=1/2" E=3/4"	16=16.0	L=Neon Lamp N=NPT

Configuration dimension chart

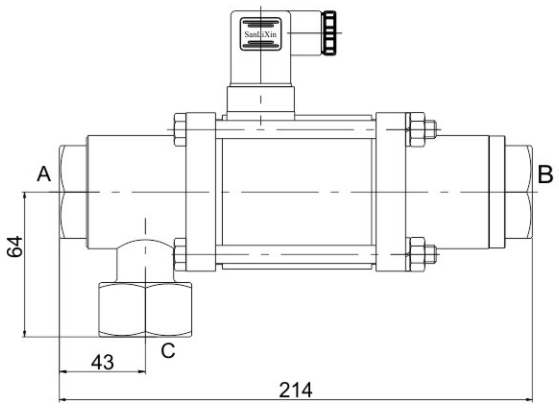

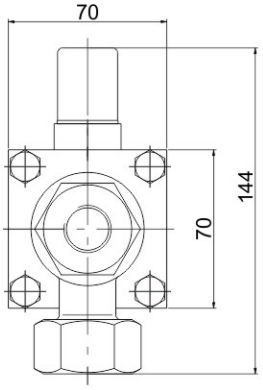

Valve Selection List

Pipe Size	Orifice mm	CV Factor	Operating pressure differential (kgf/cm^2)				Coil Type	Coil Class	Power		Max. Fluids Temp. ℃	Model Code 220VAC	Weight KG
			Min.	Max.					VA	W			
				A→B	A→C	B→A			AC 220V	DC 24V		Forged Brass	
3/8"	16	5.5	0	40	40	16	A	H	50	50	120	ZXFV3AH02V1C16	4.0
1/2"	16	5.5	0	40	40	16	A	H	50	50	120	ZXFV3AH02V1D16	
3/4"	16	5.5	0	40	40	16	A	H	50	50	120	ZXFV3AH02V1E16	

ZXFE manifold coaxial valve · normally closed

Integrated 2/2 axial solenoid valve, normally closed type,
closed when de-energized, open when energized.;
Working pressure：0~110kgf/cm^2
Ambient temp：0℃~65℃
Voltage：AC220V/50HZ DC24V +10%~-10%
Seals：NBR、VITON、EPDM、PTFE
Connection seat material：Stainless steel(Brass、Aluminium alloy)
Orifice:： ϕ6.0mm~25mm
Connection thread：IN：1/2" ~ 1-1/2"
OUT：1/4" ~ 1"





Solenoid Axial Valve Numbering System for Order

1	2	3	4	5	6	7	8		9	10	11
Valve Series	Mode of Operation	Coil Type	Coils Class	Voltage	Seal Material	Body Material	Pipe Size		Orifice	Qty.	Options
ZXFE	1	A	H	13	V	3	DB		06	N3	□
	1= Normally Closed	A=Metallic Housing DIN standard	H= H Class	13= DC24V 02= AC220V	N=NBR E=EPDM V=VITON T=PTFE	3= SS316 4= SS304 1=Forged Brass 8= Aluminium alloy	IN D=1/2" E=3/4" G=1" H=1-1/4" J=1-1/2"	OUT B=1/4" C=3/8" D=1/2" E=3/4" G=1"	06=6.0 08=8.0 10=10.0 16=16.0 17=17.0 25=25.0	N2=2 N3=3 …… N8=8	N=NPT L= Neon Lamp N=NPT

ZXFE manifold coaxial valve · normally closed

External Dimensions Chart

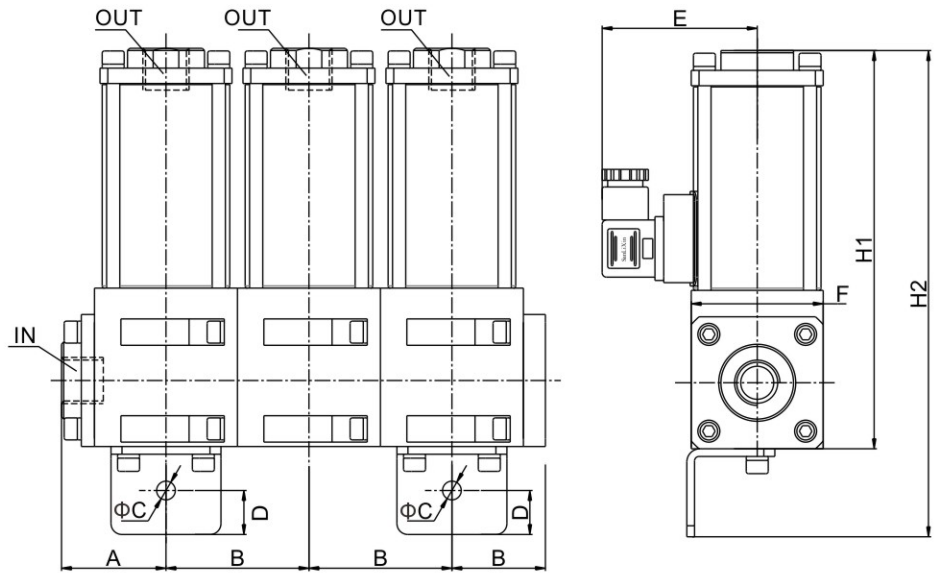

Diameter	A	B	ΦC	D	E	F	H1	H2
6.0	52.5	65	8.5	20	71	60	189	229
8.0	52.5	65	8.5	20	71	60	189	229
10.0	52.5	65	8.5	20	71	60	202	242
16.0	57.5	75	8.5	20	75	70	225	265
17.0	67.5	85	11	20	79	80	254	294
25.0	74.5	95	11	20	85	90	288	328

型号规格表

Orifice mm	CV Factor	Operating pressure differential (kgf/cm^2)			Coil Type	Coil Class	Power	Max. Fluids Temp. ℃	Model Code DC24V
		Min.	Max.						
			Forward pressure	Reverse pressure			W		
6.0	0.8	0	110	4	A	H	25	120	ZXFE1AH13V3DB06N3
8.0	1.2	0	90	4	A	H	25	120	ZXFE1AH13V3DB08N3
10.0	2.5	0	64	16	A	H	42	120	ZXFE1AH13V4GC10N3
16	5.5	0	64	16	A	H	50	120	ZXFE1AH13V4GD16N3
17.0	7.5	0	64	16	A	H	57	120	ZXFE1AH13V4HE17N3
25.0	13	0	64	16	A	H	77	120	ZXFE1AH13V4JG25N3

ZXFE manifold coaxial valve · normally closed

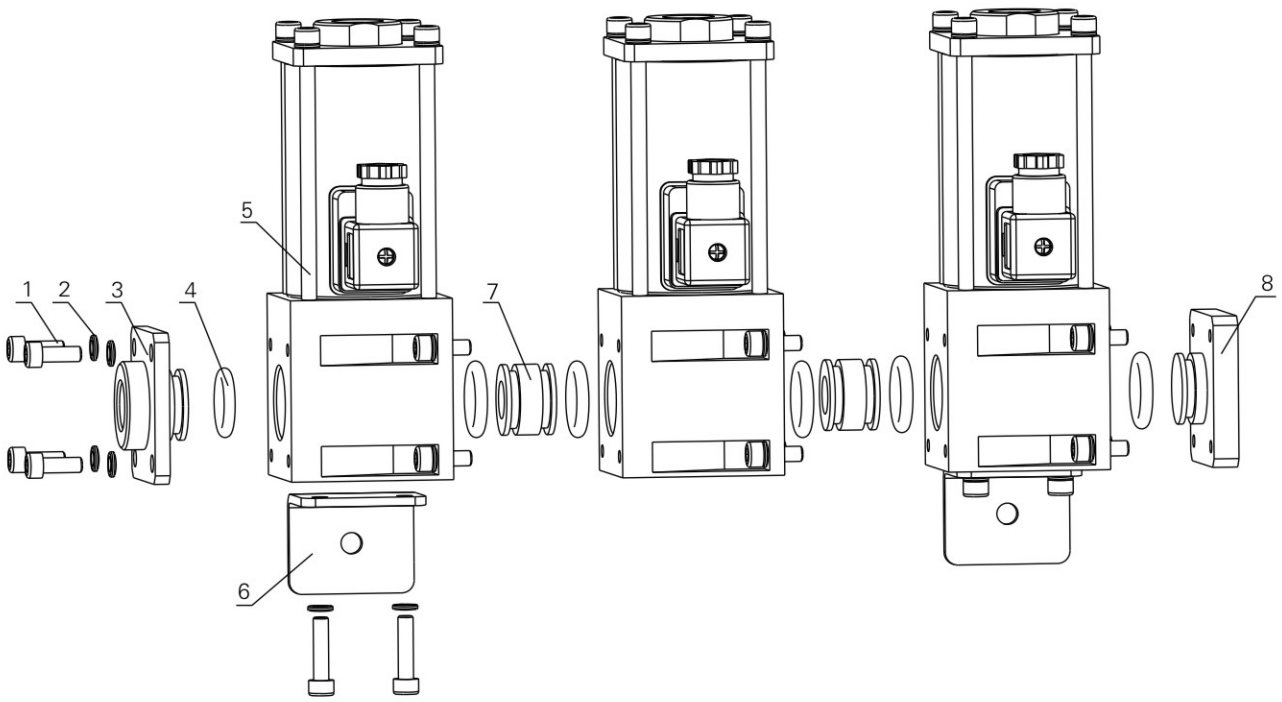

NO.	Component Name	NO.	Component Name
1	Locking bolt	5	Single solenoid valve
2	Spring washer	6	Mounting bracket
3	Left connecting block	7	Connecting piece
4	O-ring	8	Sealing end cap

SGH compact series 2/2-way direct acting solenoid valve · normally closed

1: 2-Way normally closed solenoid valve, Closed when de-energized, open when energized. Serialized products, small in size, large flow rate, widely use

2: Working pressure: 0~20kgf/cm^2

3: Body material:brass、SS316

4: Ambient Temp. 0℃~65℃

5: Voltage: AC220V/50Hz DC24V -10%~+10% Voltage Tolerance

6: This series valves are offered NBR、VITON、EPDM etc

7: Medium:gas、liquid<20cst

8: Flow as the arrow, mounts in any position; Best position is solenoid vertical and upright direction.



Solenoid Valves Numbering System for Order

Position description	1	2	3	4	5	6	7	8	9	10
	Valve Series	Mode of Operation	Coil Type	Coil Class	Voltage	Seal Material	Body Material	Pipe Size	Orifice (mm)	Options
E.G.	SGH	1	D	F	02	N	1	E	20	□
		1: Normally Closed 2: Normally Open	D: DIN Standard Connections, Fully Encapsulated	F:F Class	02= AC220V 13= DC24V	N= NBR E= EPDM V= VITON	1= Forged Brass 3=SS316	A= G1/8" B= G1/4"	C2=1.5 02=2.0 03=3.0 04=4.0	L= Neon lamp N= NPT thread

Construction, External Dimensions Chart

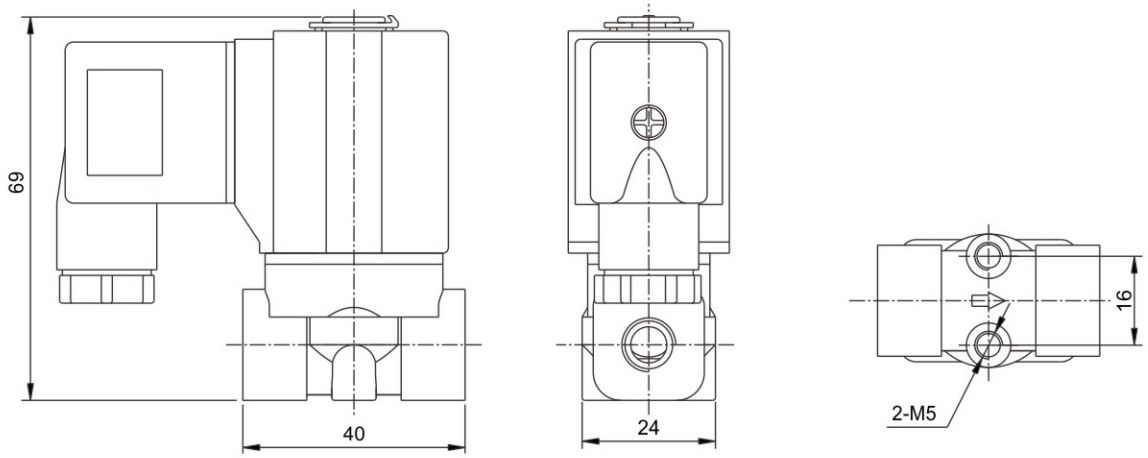

SGH compact series 2/2-way direct acting solenoid valve · normally closed

Valve Selection List

Pipe Size	Orifice mm	CV Factor	Operating pressure differential (kgf/cm^2)							Coil Type	Coil Class	Max. Fluids Temp. ℃	Power		Model Code Follows Voltage are 220VAC Seal material:NBR	Weight KG
			Min.	Max.									VA	W		
				Air Gas		Water Liquids		Light oil ≤20CST					AC 220V	DC 24V		
				AC	DC	AC	DC	AC	DC						Forged Brass	
1/8"	1.5	0.1	0	20	20	20	20	20	20	D	F	80	15	9	SGH1DF02N1AC2	0.31
	1.5	0.1	0	20	20	20	20	20	20	D	F	120	15	9	SGH1DF02E1AC2	0.31
	1.5	0.1	0	20	20	20	20	20	20	D	F	120	15	9	SGH1DF02V1AC2	0.31
	2.0	0.18	0	20	20	20	20	20	20	D	F	80	15	9	SGH1DF02N1A02	0.31
	2.0	0.18	0	20	20	20	20	20	20	D	F	120	15	9	SGH1DF02E1A02	0.31
	2.0	0.18	0	20	20	20	20	20	20	D	F	120	15	9	SGH1DF02V1A02	0.31
	3.0	0.33	0	10	7	10	7	10	7	D	F	80	15	9	SGH1DF02N1A03	0.31
	3.0	0.33	0	10	7	10	7	10	7	D	F	120	15	9	SGH1DF02E1A03	0.31
	3.0	0.33	0	10	7	10	7	10	7	D	F	120	15	9	SGH1DF02V1A03	0.31
	4.0	0.55	0	6	4	6	4	6	4	D	F	80	15	9	SGH1DF02N1A04	0.31
	4.0	0.55	0	6	4	6	4	6	4	D	F	120	15	9	SGH1DF02E1A04	0.31
	4.0	0.55	0	6	4	6	4	6	4	D	F	120	15	9	SGH1DF02V1A04	0.31
1/4"	1.5	0.1	0	20	20	20	20	20	20	D	F	80	15	9	SGH1DF02N1BC2	0.3
	1.5	0.1	0	20	20	20	20	20	20	D	F	120	15	9	SGH1DF02E1BC2	0.3
	1.5	0.1	0	20	20	20	20	20	20	D	F	120	15	9	SGH1DF02V1BC2	0.3
	2.0	0.18	0	20	20	20	20	20	20	D	F	80	15	9	SGH1DF02N1B02	0.3
	2.0	0.18	0	20	20	20	20	20	20	D	F	120	15	9	SGH1DF02E1B02	0.3
	2.0	0.18	0	20	20	20	20	20	20	D	F	120	15	9	SGH1DF02V1B02	0.3
	3.0	0.33	0	10	7	10	7	10	7	D	F	80	15	9	SGH1DF02N1B03	0.3
	3.0	0.33	0	10	7	10	7	10	7	D	F	120	15	9	SGH1DF02E1B03	0.3
	3.0	0.33	0	10	7	10	7	10	7	D	F	120	15	9	SGH1DF02V1B03	0.3
	4.0	0.55	0	6	4	6	4	6	4	D	F	80	15	9	SGH1DF02N1B04	0.3
	4.0	0.55	0	6	4	6	4	6	4	D	F	120	15	9	SGH1DF02E1B04	0.3
	4.0	0.55	0	6	4	6	4	6	4	D	F	120	15	9	SGH1DF02V1B04	0.3

SGH compact series 2/2-way direct acting solenoid valve · normally open

1: 2-Way normally open solenoid valve, Open when de-energized, Closed when energized. Serialized products, small in size, large flow rate, widely use

2: Working pressure: 0~20kgf/cm^2

3: Body material:brass、SS316

4: Ambient Temp. 0℃~65℃

5: Voltage: AC220V/50Hz DC24V -10%~+10% Voltage Tolerance

6: This series valves are offered NBR、VITON、EPDM etc

7: Medium:gas、liquid<20cst

8: Flow as the arrow, mounts in any position; Best position is solenoid vertical and upright direction.



Normally Open **De-energized** **Open**

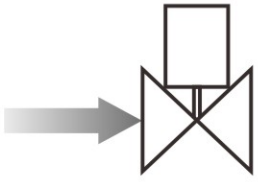

Energized **Closed**



Construction, External Dimensions Chart

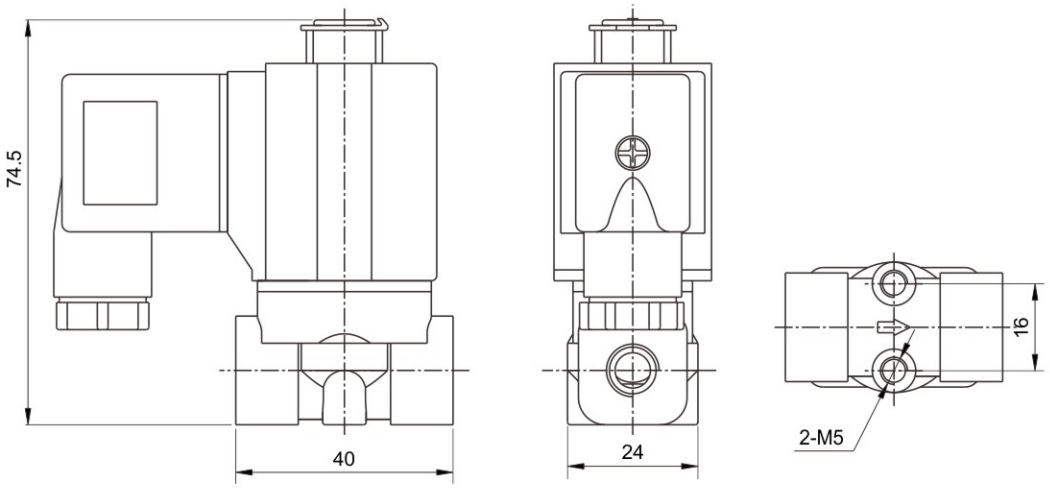

SGH compact series 2/2-way direct acting solenoid valve · normally open

Valve Selection List

Pipe Size	Orifice mm	CV Factor	Operating pressure differential (kgf/cm²)							Coil Type	Coil Class	Max. Fluids Temp. ℃	Power		Model Code Follows Voltage are 220VAC Seal material:NBR	Weight KG
			Min.	Max.									VA	W		
				Air Gas		Water Liquids		Light oil ≤20CST					AC 220V	DC 24V		
				AC	DC	AC	DC	AC	DC						Forged Brass	
1/8"	1.5	0.1	0	20	20	20	20	20	20	D	F	80	15	9	SGH2DF02N1AC2	0.32
	1.5	0.1	0	20	20	20	20	20	20	D	F	120	15	9	SGH2DF02E1AC2	0.32
	1.5	0.1	0	20	20	20	20	20	20	D	F	120	15	9	SGH2DF02V1AC2	0.32
	2.0	0.18	0	15	15	15	15	15	15	D	F	80	15	9	SGH2DF02N1A02	0.32
	2.0	0.18	0	15	15	15	15	15	15	D	F	120	15	9	SGH2DF02E1A02	0.32
	2.0	0.18	0	15	15	15	15	15	15	D	F	120	15	9	SGH2DF02V1A02	0.32
	3.0	0.33	0	7	7	7	7	7	7	D	F	80	15	9	SGH2DF02N1A03	0.32
	3.0	0.33	0	7	7	7	7	7	7	D	F	120	15	9	SGH2DF02E1A03	0.32
	3.0	0.33	0	7	7	7	7	7	7	D	F	120	15	9	SGH2DF02V1A03	0.32
	4.0	0.55	0	4	4	4	4	4	4	D	F	80	15	9	SGH2DF02N1A04	0.32
	4.0	0.55	0	4	4	4	4	4	4	D	F	120	15	9	SGH2DF02E1A04	0.32
	4.0	0.55	0	4	4	4	4	4	4	D	F	120	15	9	SGH2DF02V1A04	0.32
1/4"	1.5	0.1	0	20	20	20	20	20	20	D	F	80	15	9	SGH2DF02N1BC2	0.31
	1.5	0.1	0	20	20	20	20	20	20	D	F	120	15	9	SGH2DF02E1BC2	0.31
	1.5	0.1	0	20	20	20	20	20	20	D	F	120	15	9	SGH2DF02V1BC2	0.31
	2.0	0.18	0	15	15	15	15	15	15	D	F	80	15	9	SGH2DF02N1B02	0.31
	2.0	0.18	0	15	15	15	15	15	15	D	F	120	15	9	SGH2DF02E1B02	0.31
	2.0	0.18	0	15	15	15	15	15	15	D	F	120	15	9	SGH2DF02V1B02	0.31
	3.0	0.33	0	7	7	7	7	7	7	D	F	80	15	9	SGH2DF02N1B03	0.31
	3.0	0.33	0	7	7	7	7	7	7	D	F	120	15	9	SGH2DF02E1B03	0.31
	3.0	0.33	0	7	7	7	7	7	7	D	F	120	15	9	SGH2DF02V1B03	0.31
	4.0	0.55	0	4	4	4	4	4	4	D	F	80	15	9	SGH2DF02N1B04	0.31
	4.0	0.55	0	4	4	4	4	4	4	D	F	120	15	9	SGH2DF02E1B04	0.31
	4.0	0.55	0	4	4	4	4	4	4	D	F	120	15	9	SGH2DF02V1B04	0.31

SLK plastic series 2/2-way irrigation solenoid valve normally closed

This 2/2-way normally closed type valve is one of the most widely used in garden irrigation solenoid valve.
Widely used in the landscape of large area lawn, stadium, agriculture in water treatment equipment.

1：Pilot operated diaphragm structure，body material is NYLON
2：Double filtration,prevent block the valve
3：Waterproof coil
4：Close slowly，Prevent water hammer
5：Manual function（Coil turn around 3/4）Fluid medium：water

Medium temperature：0~42℃ ambient temperature：0~52℃
Connect：BSPT 1/2"~4"， Flange connection
Coil voltage：AC24V、AC220V、AC110V 50/60HZ, 6.7VA ;
DC24V 3.6W
Latching coil:DC9V~DC12V
Material：Body-NYLON
Seal-NBR
plunger-430F
spring-SS304
divided magnetic ring-purple copper



Solenoid Valves Numbering System for Order

Position description	1	2	3	4	5	6	7	8	9	10
	Valve Series	Mode of Operation	Coil Type	Coil Class	Voltage	Seal Material	Body Material	Pipe Size	Orifice (mm)	Options
E.G.	SLK	1	N	F	05	N	7	E	25	
		1= Normally Closed	N= Wire water proof coil B= Latching coil	F= F Class	02=AC220V 01=AC110V 05=AC24V 12=DC12V 13=DC24V 09=DC9~20V	N=NBR E=EPDM	7= Plastic	D=1/2" E=3/4" G=1" H=1-1/4" J=1-1/2" K=2" L=2-1/2" M=3" N=4"	15=15.0 25=25.0 35-35.0 40=40.0 50=50.0 80=80.0 100=100.0	Y=Y type M=Control the flow
								F=Flange connection	80=80.0 100=100.0	

SLK plastic series 2/2-way irrigation solenoid valve normally closed

Valve Selection List

Pipe Size	Orifice mm	Operating pressure differential (kgf/cm²)		Coil power		External Dimensions			Model Code AC24V	Weight (KG)
		Min.	Max.	AC(VA)	DC(W)	L	B	H		
1/2"	15	1	10	3.2	3.6	68	40	100	SLK1NF05N7D15M	0.25
3/4"	25	1	10	6.7	3.6	112	82	120	SLK1NF05N7E25	0.38
	25	1	10	3.2	3.6	112	83	120	SLK1NF05N7E25M	0.4
1"	25	1	10	6.7	3.6	112	82	120	SLK1NF05N7G25	0.39
	25	1	10	3.2	3.6	112	83	120	SLK1NF05N7G25M	0.4
1-1/4"	35	1	10	3.2	3.6	135	95	165	SLK1NF05N7H35M	0.83
1-1/2"	40	1	10	6.7	3.6	167	90	165	SLK1NF05N7J40	0.95
2"	50	1	10	6.7	3.6	196	122	250	SLK1NF05N7K50	1.70
	50	1	10	3.2	3.6	235	135	220	SLK1NF05N7K50Y	1.36
2-1/2"	65	1	10	3.2	3.6	250	135	220	SLK1NF05N7L65Y	1.46
3"	80	1	10	6.7	3.6	308	160	255	SLK1NF05N7M80	2.65
	80	1	10	3.2	3.6	298	140	195	SLK1NF05N7M80Y	1.65
4"	100	1	10	6.7	3.6	412	238	335	SLK1NF05N7N100	6.9
Flange connection	80	1	10	6.7	3.6	315	160	255	SLK1NF05N7F80	3.95
	80	1	10	3.2	3.6	298	140	195	SLK1NF05N7F80Y	4.9
	100	1	10	6.7	3.6	428	238	335	SLK1NF05N7F100	8.0

SLK Series Coils Characteristics List

Specification	Voltage	Power consumption	**Electric current** mA		Coil impedance 20℃
			Inrush	Holding	
AC	AC24V	6.7VA	410	280	30Ω
	AC110V	3VA	72	49	840Ω
	AC220	3VA	37	25	2730Ω
DC	DC9V	3.6W	560	400	24Ω
	DC12V	3.6W	420	300	41Ω
	DC24V	3.6W	252	180	130Ω
DC pulse coil	9-20VDC	Capacitance: 4700u Coil resistance: 6Ω Coil inductance: 12mH PWM: 20-500mSec Working model: +Red/-Black Valve open -Red/+Black Valve closed			

SLY 2/2-way solenoid valve · normally open

2-Way normally open solenoid valve, Open when de-energized, Closed when energized.
Serialized products, small in size, widely use

1: Voltage: AC220V/50Hz DC24V
2: Working pressure: 0~30bar
3: Orifice: Φ1.0-Φ2.5mm
4: Fluids Temp:0-120℃
5: Body material:brass SS
6: This series valves are offered NBR、VITON、EPDM



Construction, External Dimensions Chart

1	2	3	4	5	6	7	8	9	10
Valve Series	Mode of Operation	Coil Type	Coil Class	Voltage	Seal Material	Body Material	connect size	Orifice (mm)	Options
SLY	2	D	F	02	N	1	A	C2	
	2= Normally open	D: DIN Standard Connections, Fully Encapsulated S= NASS Coil	F=F Class H=H Class	02= AC220V 01= AC110V 13= DC24V	N= NBR E= EPDM V= VITON	1= brass 3= SS304	A= G1/8" B= G1/4"	01=1.0 C1=1.2 C2=1.5 02=2.0 C3=2.5	A= Thread in body B= Thread out body N=NPT

SLY 2/2-way solenoid valve · normally open

Valve Selection List

Connect	Orifice mm	Operating pressure differential (Bar)			Coil Type	Coil power		Coil Class	Model Code Follows Voltage AC220V/50Hz	Weight kg
		Min.	Max.			VA	W			
			Air	Water		AC220V	DC24V			
G1/8	Φ1.0	0	30	30	D	22	13	F	SLY2DF02N1A01	0.25
G1/8	Φ1.2	0	30	30	D	22	13	F	SLY2DF02N1AC1	0.25
G1/8	Φ1.5	0	30	30	D	22	13	F	SLY2DF02N1AC2	0.25
G1/8	Φ2.0	0	13	10	D	22	13	F	SLY2DF02N1A02	0.25
G1/8	Φ2.5	0	11	8	D	22	13	F	SLY2DF02N1AC3	0.25

External Dimensions Chart

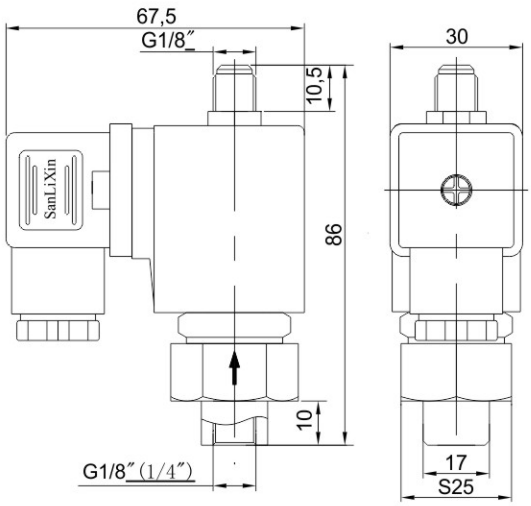

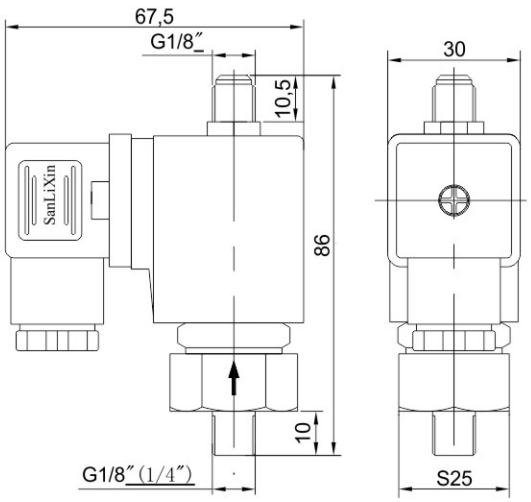

SLQF 2/2-way solenoid valve

1: 2-Way normally closed solenoid valve; Closed when de-energized, open when energized.

2: Ambient Temp. 0℃~65℃

3: Serialized products, small in size, large flow rate, widely use.

4: Flow as the arrow, mounts in any position; Best position is Solenoid vertical and upright direction.

5: Voltage: AC/DC 24~220V,

6: Seal material: NBR VITON EPDM TEFLON to provide on-off control of various fluid.



Solenoid Valves Numbering System for Order

Position description	1	2	3	4	5	6	7	8	9	10
	Valve Series	Mode of Operation	Coil Type	Coil Class	Voltage	Seal Material	Body Material	Pipe Size	Orifice (Φ mm)	Options
E.G.	SLQF	1	A	H	02	T	1	D	15	
	SLQF Series	1: Normally Closed	A: Metallic Housing, DIN Standard	F:F Class H:H Class	02= AC220V 13= DC24V 07= 24–220V AC/DC Contact the company for other voltage	N=NBR V=VITON E=EPDM T=PTFE	1=Forged Brass 4=SS304	C=3/8 " D=1/2 " E=3/4 " G=1 " H=1 1/4 " J=1 1/2 " K=2 "	15=15.0 20=20.0 25=25.0 32=32.0 40=40.0 50=50.0	L: Neon Lamp N: NPT Connection P: PT R: RC

External Dimensions Chart

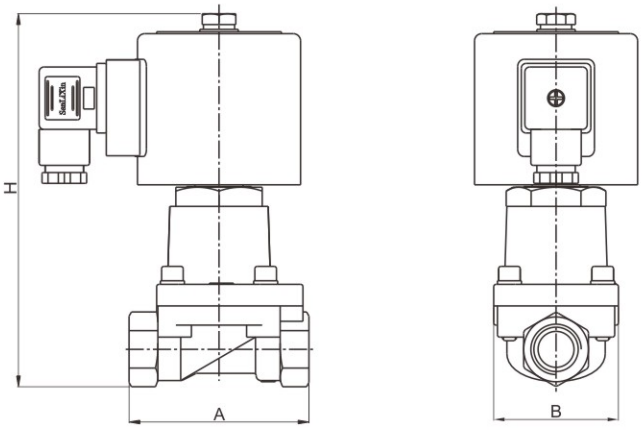

Orifice (mm)	A	B	C
15	75	52	156
20	85	60	176
25	100	69	187
40	130	92	203
50	150	110	210

SLQF 2/2-way solenoid valve

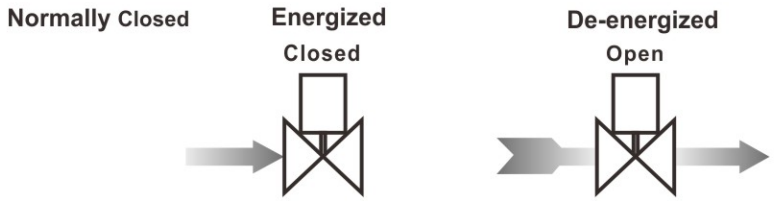

Valve Selection List

Pipe Conn -ection	Orifice (mm)	CV Factor	Operating pressure differential (kgf/cm²)								Coil Type	Coil Class	Max. Fluids Temp. ℃	Power consumption		Model Code Follows Voltage are 220VAC 50/60HZ		Weight (KG)
			Min.	Max.										VA	W			
				Air Gas		Water Liquids		Light oil ≤20CST		Steam AC/ DC				AC 220V	DC 24V	Brass	Stainless steel	
				AC	DC	AC	DC	AC	DC									
3/8"	15	4.2	0	16	16	16	16	16	16		A	F	80	20	20	SLQF1AF02N1C15	SLQF1AF02N4C15	1.55
	15	4.2	0	16	16	16	16	16	16		A	F	130	20	20	SLQF1AF02E1C15	SLQF1AF02E4C15	1.55
	15	4.2	0	16	16	16	16	16	16		A	F	110	20	20	SLQF1AF02V1C15	SLQF1AF02V4C15	1.55
	15	4.2	0	16	16	16	16	16	16	16	A	H	200	20	20	SLQF1AH02T1C15	SLQF1AH02T4C15	1.95
1/2"	15	4.5	0	16	16	16	16	16	16		A	F	80	20	20	SLQF1AF02N1D15	SLQF1AF02N4D15	1.5
	15	4.5	0	16	16	16	16	16	16		A	F	130	20	20	SLQF1AF02E1D15	SLQF1AF02E4D15	1.5
	15	4.5	0	16	16	16	16	16	16		A	F	110	20	20	SLQF1AF02V1D15	SLQF1AF02V4D15	1.5
	15	4.5	0	16	16	16	16	16	16	16	A	H	200	20	20	SLQF1AH02T1D15	SLQF1AH02T4D15	1.5
3/4"	20	9.0	0	16	16	16	16	16	16		A	F	80	20	20	SLQF1AF02N1E20	SLQF1AF02N4E20	1.9
	20	9.0	0	16	16	16	16	16	16		A	F	130	20	20	SLQF1AF02E1E20	SLQF1AF02E4E20	1.9
	20	9.0	0	16	16	16	16	16	16		A	F	110	20	20	SLQF1AF02V1E20	SLQF1AF02V4E20	1.9
	20	9.0	0	16	16	16	16	16	16	16	A	H	200	20	20	SLQF1AH02T1E20	SLQF1AH02T4E25	1.9
1"	25	13	0	16	16	16	16	16	16		A	F	80	20	20	SLQF1AF02N1G25	SLQF1AF02N4G25	2.4
	25	13	0	16	16	16	16	16	16		A	F	130	20	20	SLQF1AF02E1G25	SLQF1AF02E4G25	2.4
	25	13	0	16	16	16	16	16	16		A	F	110	20	20	SLQF1AF02V1G25	SLQF1AF02V4G25	2.4
	25	13	0	16	16	16	16	16	16	16	A	H	200	20	20	SLQF1AH02T1G25	SLQF1AH02T4G25	2.4
11/4"	40	26	0	16	16	16	16	16	16		A	F	80	33	40	SLQF1AF02N1H40	SLQF1AF02N4H40	4.2
	40	26	0	16	16	16	16	16	16		A	F	130	33	40	SLQF1AF02E1H40	SLQF1AF02E4H40	4.2
	40	26	0	16	16	16	16	16	16		A	F	110	33	40	SLQF1AF02V1H40	SLQF1AF02V4H40	4.2
	40	26	0	16	16	16	16	16	16	16	A	H	200	33	40	SLQF1AH02T1H40	SLQF1AH02T4H40	4.1
11/2"	40	29	0	16	16	16	16	16	16		A	F	80	33	40	SLQF1AH02N1J40	SLQF1AH02N4J40	4.1
	40	29	0	16	16	16	16	16	16		A	F	130	33	40	SLQF1AH02E1J40	SLQF1AH02E4J40	4.1
	40	29	0	16	16	16	16	16	16		A	F	110	33	40	SLQF1AH02V1J40	SLQF1AH02V4J40	4.1
	40	29	0	16	16	16	16	16	16	16	A	H	200	33	40	SLQF1AH02T1J40	SLQF1AH02T4J40	4.0
2"	45	45	0	16	16	16	16	16	16		A	F	80	33	40	SLQF1AH02N1K50	SLQF1AH02N4K50	4.1
	45	45	0	16	16	16	16	16	16		A	F	130	33	40	SLQF1AH02E1K50	SLQF1AH02E4K50	4.1
	45	45	0	16	16	16	16	16	16		A	F	110	33	40	SLQF1AH02V1K50	SLQF1AH02V4K50	4.1
	45	45	0	16	16	16	16	16	16	16	A	H	200	33	40	SLQF1AH02T1K50	SLQF1AH02T4K50	4.0

SLQF 2/2-way solenoid valve

Components Chart

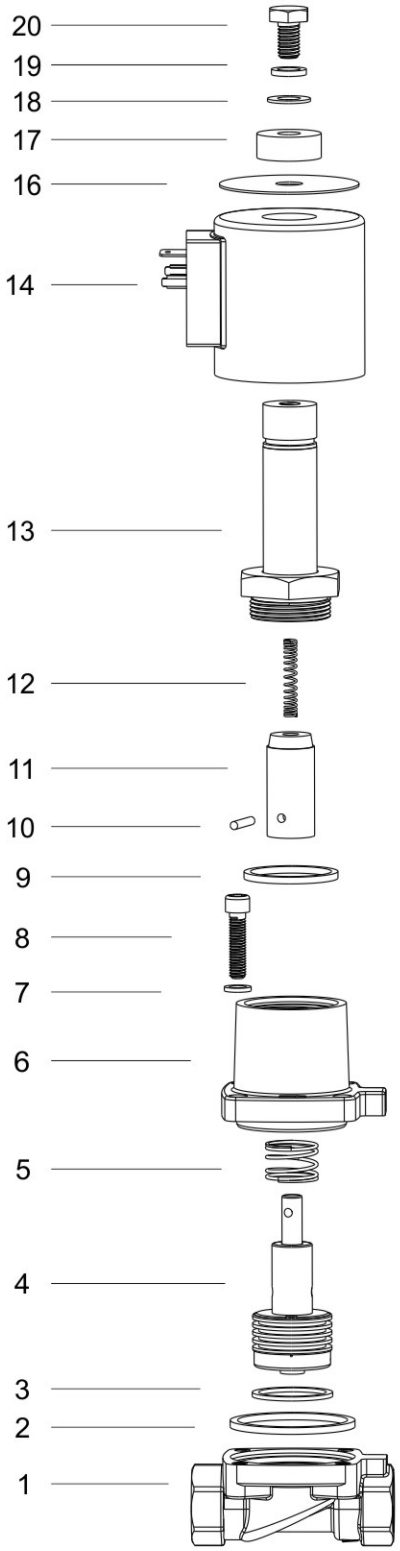

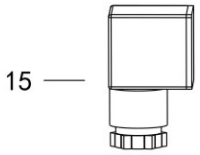

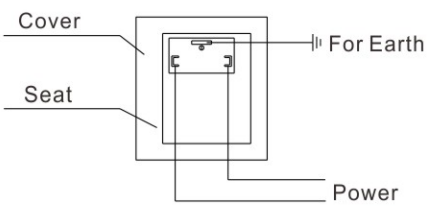

Electric wiring chart

Code	Components
1	Valve Body
2	Body Seals Ring
3	Piston Ring
4	Piston Assembly
5	Piston Spring
6	Valve Cover
7	Spring washer
8	Bolts
9	Plunger Tube Seal Ring
10	Nut
11	Plunger Assembly
12	Spring
13	Plunger Tube Assembly
14	Coil
15	Connector
16	Label
17	Nut
18	Plate
19	Spring washer
20	Lock Nut

SLQF 2/2-way solenoid valve · normally open

1: 2-Way normally open solenoid valve; Open when de-energized, closed when energized.
2: *Serialized products, high flow rate, widely use*
3: Ambient Temp. : 0℃~65℃
4: Voltage: AC220V、DC24V，AC/DC 24～220V
5: Coil Class: F class, H class
6: Seal material: NBR VITON EPDM TEFLON to provide on-off control of various fluid.
7: Flow as the arrow, mounts in any position; Best position is solenoid vertical and upright direction.



External Dimensions Chart

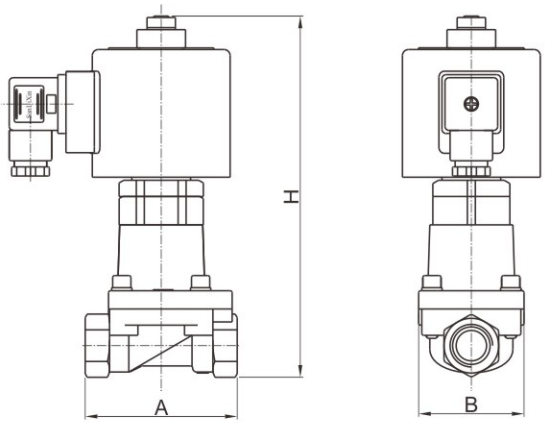

Orifice mm	A	B	H
15	75	52	177
20	85	60	195
25	100	69	206

Valve Selection List

Pipe Conn -ection	Orifice (mm)	CV Factor	Operating pressure differential (kgf/cm²) Min.	Max. Air Gas AC	Air Gas DC	Water Liquids AC	Water Liquids DC	Light oil ≤20CST AC	Light oil ≤20CST DC	Steam AC/DC	Coil Type	Coil Class	Max. Fluids Temp. ℃	Power consumption VA AC 220V	Power consumption W DC 24V	Model Code Follows Voltage are 220VAC 50/60HZ Brass	Model Code Follows Voltage are 220VAC 50/60HZ Stainless steel	Weight (KG)
3/8"	15	4.2	0	16	16	16	16	16	16		A	F	80	20	20	SLQF2AF02N1C15	SLQF2AF02N4C15	1.7
	15	4.2	0	16	16	16	16	16	16		A	F	130	20	20	SLQF2AF02E1C15	SLQF2AF02E4C15	1.7
	15	4.2	0	16	16	16	16	16	16	16	A	F	110	20	20	SLQF2AF02V1C15	SLQF2AF02V4C15	1.7
	15	4.2	0	16	16	16	16	16	16		A	H	200	20	20	SLQF2AH02T1C15	SLQF2AH02T4C15	1.7
1/2"	15	4.5	0	16	16	16	16	16	16		A	F	80	20	20	SLQF2AF02N1D15	SLQF2AF02N4D15	1.8
	15	4.5	0	16	16	16	16	16	16	16	A	F	130	20	20	SLQF2AF02E1D15	SLQF2AF02E4D15	1.8
	15	4.5	0	16	16	16	16	16	16		A	F	110	20	20	SLQF2AF02V1D15	SLQF2AF02V4D15	1.8
	15	4.5	0	16	16	16	16	16	16		A	H	200	20	20	SLQF2AH02T1D15	SLQF2AH02T4D15	1.8

SLQF 2/2-way solenoid valve · normally open

Valve Selection List

Pipe Conn -ection	Orifice (mm)	CV Factor	Operating pressure differential (kgf/cm²) Min.	Max. Air Gas AC	Max. Air Gas DC	Max. Water Liquids AC	Max. Water Liquids DC	Max. Light oil ≤20CST AC	Max. Light oil ≤20CST DC	Max. Steam AC/DC	Coil Type	Coil Class	Max. Fluids Temp. ℃	Power consumption VA AC 220V	Power consumption W DC 24V	Model Code Follows Voltage are 220VAC 50/60HZ Brass	Model Code Follows Voltage are 220VAC 50/60HZ Stainless steel	Weight (KG)
3/4"	20	9.0	0	16	16	16	16	16	16		A	F	80	20	20	SLQF2AF02N1E20	SLQF2AF02N4E20	2.1
	20	9.0	0	16	16	16	16	16	16		A	F	130	20	20	SLQF2AF02E1E20	SLQF2AF02E4E20	2.1
	20	9.0	0	16	16	16	16	16	16	16	A	F	110	20	20	SLQF2AF02V1E20	SLQF2AF02V4E20	2.1
	20	9.0	0	16	16	16	16	16	16		A	H	200	20	20	SLQF2AH02T1E20	SLQF2AH02T4E20	2.1
1"	25	13	0	16	16	16	16	16	16		A	F	80	20	20	SLQF2AF02N1G25	SLQF2AF02N4G25	2.6
	25	13	0	16	16	16	16	16	16	16	A	F	130	20	20	SLQF2AF02E1G25	SLQF2AF02E4G25	2.6
	25	13	0	16	16	16	16	16	16		A	F	110	20	20	SLQF2AF02V1G25	SLQF2AF02V4G25	2.6
	25	13	0	16	16	16	16	16	16		A	H	200	20	20	SLQF2AH02T1G25	SLQF2AH02T4G25	2.6

SBLF series gas station special solenoid valve

This valve special used for gas. oil station recycle.
Match GB3836 and GB3836.9 standard.

1. Body material: Brass
2. Voltage: 24VDC ± 10%
3. Ambient temperature: -40℃～+55℃
4. Pipe size: 1/8～1/4
5. Power: 8.2W
6. Surface High temperature: T4
7. Technical characteristics:
   Late delay < 8% repeatability < 5% Sensitivity < 3%
8. Voltage range:24VDC pulse width modulation (600 to 800Hz)
   or PWM pulse width scheduling control.
9. Ex mb IIC T4 Gb/Ex mb IIIC T130℃ Db

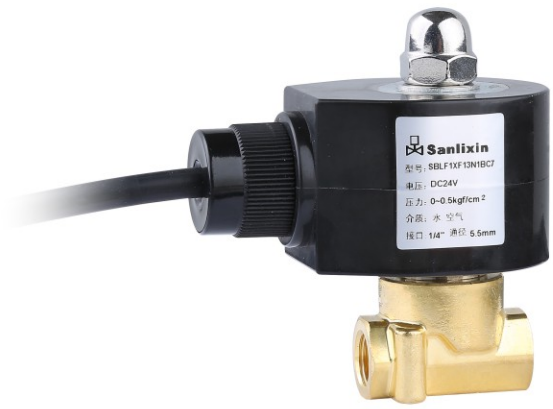

Solenoid Valves Numbering System for Order

Position description	1	2	3	4	5	6	7	8	9	10
	Valve Series	Mode of Operation	Coil Type	Coil Class	Voltage	Seal Material	Body Material	Pipe Size	Orifice (Φ mm)	Options
E.G.	SBLF	1	X	F	13	V	1	B	C7	□
	SBLF Series	1: Normally Closed	X:Ex-proof coil	F:F Class	13=DC24V	V=VITON	1=Forged Brass	A=1/8 B=1/4	C7=5.5	L:Neon Lamp N:NPT Connection P: PT R: RC

External Dimensions Chart

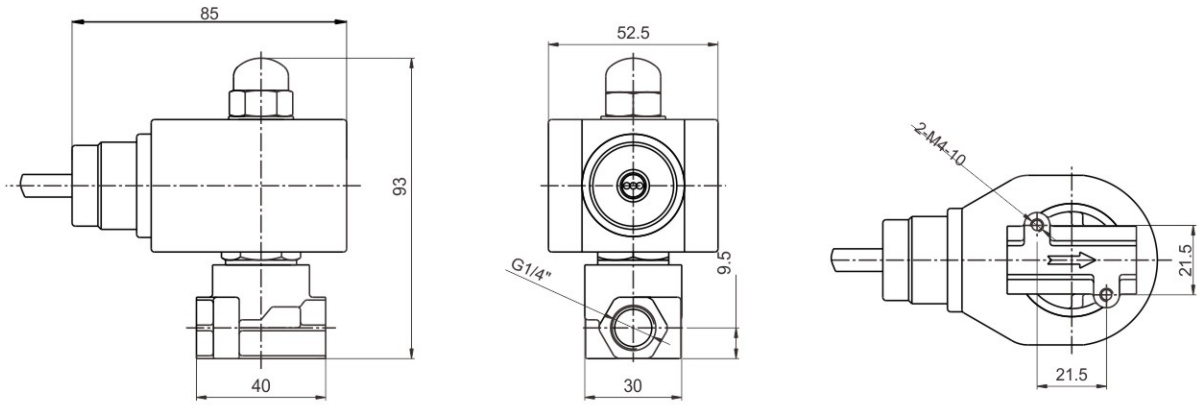

Valve Selection List

Pipe Conn -ection	Orifice (mm)	CV Factor	Operating pressure differential (kgf/cm²)		Coil Type	Coil Class	Power consumption	Max. Fluids Temp. ℃	Model Code	Weight (KG)
			Min.	Max.			DC 24V		Brass	
1/8"	5.5	0.65	0	0.5	X	F	8.2	130	SBLF1XF13V1AC7	0.8
1/4"	5.5	0.65	0	0.5	X	F	8.2	130	SBLF1XF13V1BC7	0.8

SM series solenoid valve

Low Power Strong Thrust Solenoid Valve

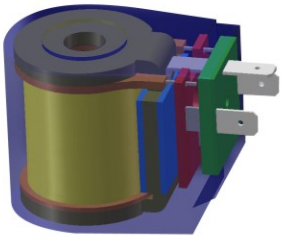



Characteristics of SM coil :

1.Power will be 1/4 of the original coil
2.Working long time will no get heat and long life cycle
3.Coil put tension enhanced 3 times faster response speed
4.Significantly lowering the controller power
5.Suit for super high pressure solenoid valve
No need larger power coil
6. Suitable for all kinds of AC/DC solenoid valve

Parameters of the solenoid valve with old type& new type coil

Point	Standard coil	New type coil
Orifice	3.00 mm	3.00 mm
Power consumption	12W/22VA	3W/4.5VA
Max working pressure	13bar	36bar
Coil temp.	≥80℃	≤50℃
Noise	AC maybe has the noise	AC no noise
coil life cycle	≤1,000,000	≥50,000,00

SMS series 2/2-way direct acting solenoid valve·normally closed

Solenoid Valves Model Numbering System for Order

Position description	1	2	3	4	5	6	7	8	9	10
	Valve Series	Mode of Operation	Coil Type	Coil Class	Voltage	Seal Material	Body Material	Pipe Size	Orifice（mm）	Options
E.G.	SMS	1	M	F	02	N	1	B	05	□
	SMS	1:Normally Closed	M=SM Series Coil	F=F Class	02= AC220V AC230V	N=NBR	1= Forged brass 3=SS316	A=1/8" B=1/4"	02=2.0 C3=2.5 03=3.0 04=4.0 05=5.0 06=6.0 C8=7.5	L= Neon lamp K= Mounting Bracket N=NPT P=PT R=RC T=Timer
					01= AC110V AC120V	V=VITON	1= Forged brass 4=SS304	C=3/8" D=1/2"	04=4.0 05=5.0 06=6.0 C8=7.5	
								C=3/8" D=1/2"	16=16.0	
					13=DC24V 05=AC24V 12=DC12V	E=EPDM T=PTFE		E=3/4"	20=20.0	
								G=1"	25=25.0	
								H=1 1/4" J=1 1/2" K=2"	32=32.0 40=40.0 50=50.0	
							4=SS304	F= flange connection	15=15.0 20=20.0 25=25.0 32=32.0 40=40.0 50=50.0	

SMS Series 2/2-way Direct Acting Solenoid Valve·Normally Closed

1.2/2-way normally closed direct acting solenoid valve, closed when de-energized,open when energized.

2.The product is special design, power will be normal type 1/4,low temperature,small in size,widely use.

3.Body material: Forged Brass、Stainless Steel

4.Ambient temp.:0℃~65℃ Fluids temp.: 0℃~130℃

5.Flow as the arrow,mounts in any position;Best position is solenoid vertical and upright direction.

6.Voltage:AC 220V/230V/110V/24V DC 24V DC12V Voltage Tolerance:+10% to -10% applicable voltage

7.This series valve are offered NBR、VITON、EPDM etc for seals and diaphragm to provide on-off various fluids.

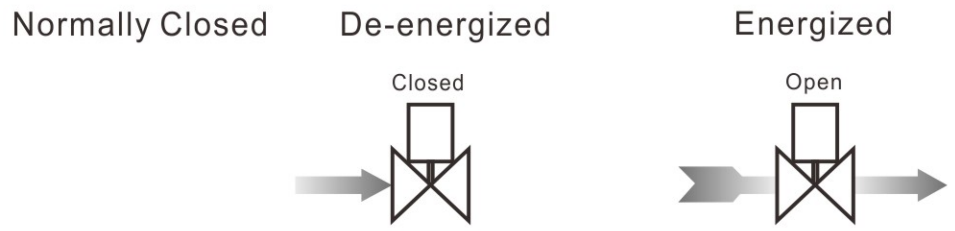

φ2、2.5、3.0(1/8″、1/4″)

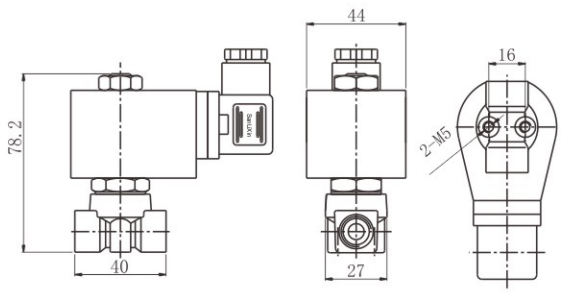

φ4、5、6、7.5（1/8″、1/4″）

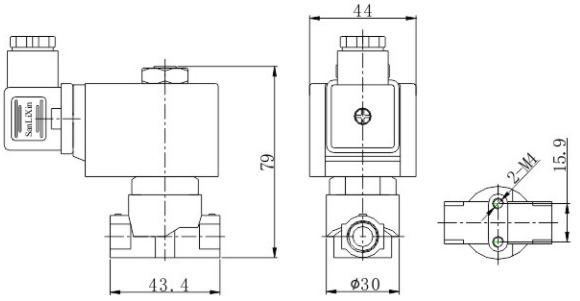

φ4、5、6、7.5（3/8″、1/2″）

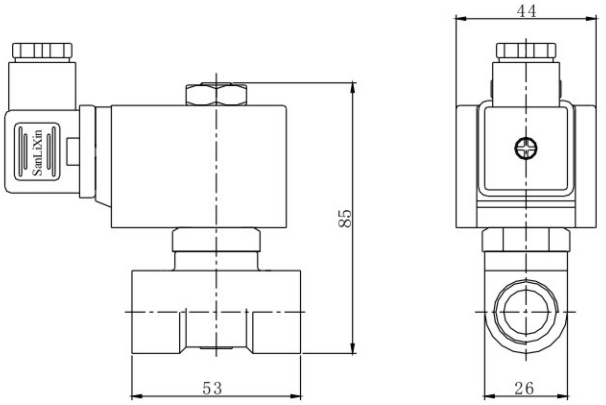

SMS series 2/2-way direct acting solenoid valve·normally closed

Valve Selection List

Pipe Conn -ection	Orifice mm	CV Factor	Operating pressure differential (kgf/cm²) Min.	Max. Air Gas AC	Max. Air Gas DC	Max. Water Hot water Liquids AC	Max. Water Hot water Liquids DC	Max. Light oil ≤20CST AC	Max. Light oil ≤20CST DC	Coil Type	Coil Class	Max. fluids Temp. ℃	Model Code Follows Voltage are 220VAC Forged Brass	Model Code Follows Voltage are 220VAC Stainless Steel	Weight (KG)
1/8"	2.0	0.14	0	120	120	120	120	120	120	M	F	80	SMS1MF02N1A02	SMS1MF02N3A02	0.48
	2.0	0.14	0	120	120	120	120			M	F	130	SMS1MF02N1A02	SMS1MF02N3A02	
	2.0	0.14	0	120	120	120	120	120	120	M	F	120	SMS1MF02N1A02	SMS1MF02N3A02	
	2.5	0.23	0	80	80	80	80	80	80	M	F	80	SMS1MF02N1AC3	SMS1MF02N3AC3	0.48
	2.5	0.23	0	80	80	80	80			M	F	130	SMS1MF02E1AC3	SMS1MF02E3AC3	
	2.5	0.23	0	80	80	80	80	80	80	M	F	120	SMS1MF02V1AC3	SMS1MF02V3AC3	
	3.0	0.25	0	65	65	65	65	65	65	M	F	80	SMS1MF02N1A03	SMS1MF02N3A03	0.48
	3.0	0.25	0	65	65	65	65			M	F	130	SMS1MF02E1A03	SMS1MF02E3A03	
	3.0	0.25	0	65	65	65	65	65	65	M	F	120	SMS1MF02V1A03	SMS1MF02V3A03	
	4.0	0.6	0	45	35	45	35	45	35	M	F	80	SMS1MF02N1A04	SMS1MF02N3A04	0.49
	4.0	0.6	0	45	35	45	35			M	F	130	SMS1MF02E1A04	SMS1MF02E3A04	
	4.0	0.6	0	45	35	45	35	45	35	M	F	120	SMS1MF02V1A04	SMS1MF02V3A04	
	5.0	0.65	0	24	16	24	16	24	16	M	F	80	SMS1MF02N1A05	SMS1MF02N3A05	0.49
	5.0	0.65	0	24	16	24	16			M	F	130	SMS1MF02E1A05	SMS1MF02E3A05	
	5.0	0.65	0	24	16	24	16	24	16	M	F	120	SMS1MF02V1A05	SMS1MF02V3A05	
	6.0	0.8	0	16	12	16	12	16	12	M	F	80	SMS1MF02N1A06	SMS1MF02N3A06	0.49
	6.0	0.8	0	16	12	16	12			M	F	130	SMS1MF02E1A06	SMS1MF02E3A06	
	6.0	0.8	0	16	12	16	12	16	12	M	F	120	SMS1MF02V1A06	SMS1MF02V3A06	
	7.5	1.0	0	8	5	8	5	8	5	M	F	80	SMS1MF02N1AC8	SMS1MF02N3AC8	0.49
	7.5	1.0	0	8	5	8	5			M	F	130	SMS1MF02E1AC8	SMS1MF02E3AC8	
	7.5	1.0	0	8	5	8	5	8	5	M	F	120	SMS1MF02V1AC8	SMS1MF02V3AC8	
1/4"	2.0	0.14	0	120	120	120	120	120	120	M	F	80	SMS1MF02N1B02	SMS1MF02N3B02	0.48
	2.0	0.14	0	120	120	120	120			M	F	130	SMS1MF02N1B02	SMS1MF02N3B02	
	2.0	0.14	0	120	120	120	120	120	120	M	F	120	SMS1MF02N1B02	SMS1MF02N3B02	
	2.5	0.23	0	80	80	80	80	80	80	M	F	80	SMS1MF02N1BC3	SMS1MF02N3BC3	0.48
	2.5	0.23	0	80	80	80	80			M	F	130	SMS1MF02E1BC3	SMS1MF02E3BC3	
	2.5	0.23	0	80	80	80	80	80	80	M	F	120	SMS1MF02V1BC3	SMS1MF02V3BC3	
	3.0	0.25	0	65	65	65	65	65	65	M	F	80	SMS1MF02N1B03	SMS1MF02N3B03	0.48
	3.0	0.25	0	65	65	65	65			M	F	130	SMS1MF02E1B03	SMS1MF02E3B03	
	3.0	0.25	0	65	65	65	65	65	65	M	F	120	SMS1MF02V1B03	SMS1MF02V3B03	
	4.0	0.6	0	45	35	45	35	45	35	M	F	80	SMS1MF02N1B04	SMS1MF02N3B04	0.48
	4.0	0.6	0	45	35	45	35			M	F	130	SMS1MF02E1B04	SMS1MF02E3B04	
	4.0	0.6	0	45	35	45	35	45	35	M	F	120	SMS1MF02V1B04	SMS1MF02V3B04	
	5.0	0.65	0	24	16	24	16	24	16	M	F	80	SMS1MF02N1B05	SMS1MF02N3B05	0.48
	5.0	0.65	0	24	16	24	16			M	F	130	SMS1MF02E1B05	SMS1MF02E3B05	
	5.0	0.65	0	24	16	24	16	24	16	M	F	120	SMS1MF02V1B05	SMS1MF02V3B05	
	6.0	0.8	0	16	12	16	12	16	12	M	F	80	SMS1MF02N1B06	SMS1MF02N3B06	0.48
	6.0	0.8	0	16	12	16	12			M	F	130	SMS1MF02E1B06	SMS1MF02E3B06	
	6.0	0.8	0	16	12	16	12	16	12	M	F	120	SMS1MF02V1B06	SMS1MF02V3B06	
	7.5	1.0	0	8	5	8	5	8	5	M	F	80	SMS1MF02N1BC8	SMS1MF02N3BC8	0.48
	7.5	1.0	0	8	5	8	5			M	F	130	SMS1MF02E1BC8	SMS1MF02E3BC8	
	7.5	1.0	0	8	5	8	5	8	5	M	F	120	SMS1MF02V1BC8	SMS1MF02V3BC8	

SMS series 2/2-way direct acting solenoid valve·normally closed







Valve Selection List

Pipe Conn -ection	Orifice mm	CV Factor	Operating pressure differential (kgf/cm²) Min.	Max. Air Gas AC	Max. Air Gas DC	Max. Water Hot water Liquids AC	Max. Water Hot water Liquids DC	Max. Light oil ≤20CST AC	Max. Light oil ≤20CST DC	Coil Type	Coil Class	Max. fluids Temp. ℃	Model Code Follows Voltage are 220VAC Forged Brass	Model Code Follows Voltage are 220VAC Stainless Steel	Weight Kg
3/8"	4.0	0.6	0	45	35	45	35	45	35	M	F	80	SMS1MF02N1C04	SMS1MF02N4C04	
	4.0	0.6	0	45	35	45	35			M	F	130	SMS1MF02E1C04	SMS1MF02E4C04	0.57
	4.0	0.6	0	45	35	45	35	45	35	M	F	120	SMS1MF02V1C04	SMS1MF02V4C04	
	5.0	0.65	0	24	16	24	16	24	16	M	F	80	SMS1MF02N1C05	SMS1MF02N4C05	
	5.0	0.65	0	24	16	24	16			M	F	130	SMS1MF02E1C05	SMS1MF02E4C05	0.58
	5.0	0.65	0	24	16	24	16	24	16	M	F	120	SMS1MF02V1C05	SMS1MF02V4C05	
	6.0	0.8	0	16	12	16	12	16	12	M	F	80	SMS1MF02N1C06	SMS1MF02N4C06	
	6.0	0.8	0	16	12	16	12			M	F	130	SMS1MF02E1C06	SMS1MF02E4C06	0.58
	6.0	0.8	0	16	12	16	12	16	12	M	F	120	SMS1MF02V1C06	SMS1MF02V4C06	
	7.5	1.0	0	8	5	8	5	8	5	M	F	80	SMS1MF02N1CC8	SMS1MF02N4CC8	
	7.5	1.0	0	8	5	8	5			M	F	130	SMS1MF02E1CC8	SMS1MF02E4CC8	0.58
	7.5	1.0	0	8	5	8	5	8	5	M	F	120	SMS1MF02V1CC8	SMS1MF02V4CC8	
1/2"	4.0	0.6	0	45	35	45	35	45	35	M	F	80	SMS1MF02N1D04	SMS1MF02N4D04	
	4.0	0.6	0	45	35	45	35			M	F	130	SMS1MF02E1D04	SMS1MF02E4D04	0.57
	4.0	0.6	0	45	35	45	35	45	35	M	F	120	SMS1MF02V1D04	SMS1MF02V4D04	
	5.0	0.65	0	24	16	24	16	24	16	M	F	80	SMS1MF02N1D05	SMS1MF02N4D05	
	5.0	0.65	0	24	16	24	16			M	F	130	SMS1MF02E1D05	SMS1MF02E4D05	0.57
	5.0	0.65	0	24	16	24	16	24	16	M	F	120	SMS1MF02V1D05	SMS1MF02V4D05	
	6.0	0.8	0	16	12	16	12	16	12	M	F	80	SMS1MF02N1D06	SMS1MF02N4D06	
	6.0	0.8	0	16	12	16	12			M	F	130	SMS1MF02E1D06	SMS1MF02E4D06	0.57
	6.0	0.8	0	16	12	16	12	16	12	M	F	120	SMS1MF02V1D06	SMS1MF02V4D06	
	7.5	1.0	0	8	5	8	5	8	5	M	F	80	SMS1MF02N1DC8	SMS1MF02N4DC8	
	7.5	1.0	0	8	5	8	5			M	F	130	SMS1MF02E1DC8	SMS1MF02E4DC8	0.57
	7.5	1.0	0	8	5	8	5	8	5	M	F	120	SMS1MF02V1DC8	SMS1MF02V4DC8	

SMS 2/2-way large diameter direct acting solenoid valve · normally closed

1.2/2-way normally closed direct acting solenoid valve, closed when de-energized,open when energized.
2.The product is special design, power will be normal type 1/4, low temperature,small in size,large flow rate,widely use.
3.Body material: Forged Brass、Stainless Steel
4.Ambient temp.:0℃~65℃ Fluids temp.: 0℃~130℃
5.Flow as the arrow,mounts in any position;Best position is solenoid vertical and upright direction.
6.Voltage:AC 220V/230V/110V/24V DC 24V DC12V
Voltage Tolerance: +10% to -10% applicable voltage
7.This series valve are offered NBR、VITON、EPDM etc for seals and diaphragm to provide on-off various fluids.



External Dimensions Chart

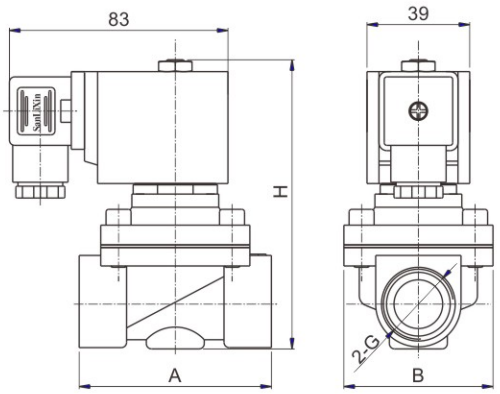

Orifice(mm)	G	A	B	H
16	3/8"	69	57	106
	1/2"	69	57	106
20	3/4"	73	57	114
	1"	80	62	117
25	1"	99	77	121

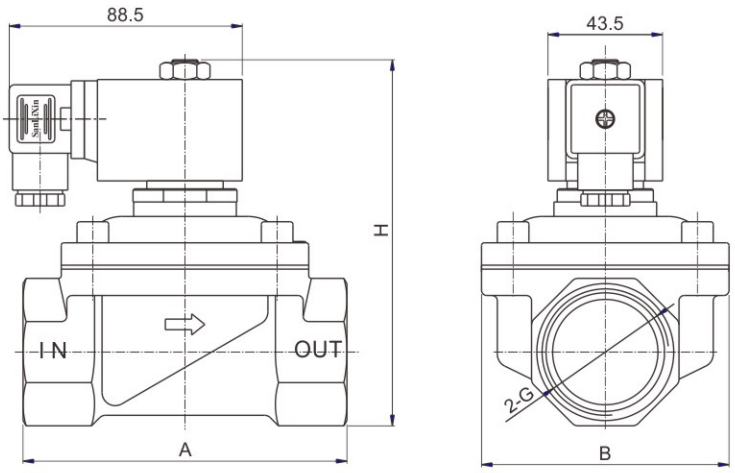

Orifice(mm)	G	A	B	H
32	1 1/4"	112	86.5	150
	1 1/2"	120	86.5	160
40	1 1/2"	123	94	160
	2"	130	94	175
50	2"	165	120	176

SMS 2/2-way large diameter direct acting solenoid valve · normally closed

Valve Selection List

Pipe Conn -ection	Orifice mm	CV Factor	Operating pressure differential (kgf/cm²)							Max. fluids Temp. ℃	Model Code Follows Voltage are 220VAC		Weight Kg
			Min.	Max.									
				Air Gas		Water Liquids		Light oil ≤20CST					
				AC	DC	AC	DC	AC	DC		Forged Brass	Stainless Steel	
3/8"	16	4.8	0	10	10	10	10	8	8	80	SMS1MF02N1C16	SMS1MF02N4C16	0.87
	16	4.8	0	10	10	10	10			130	SMS1MF02E1C16	SMS1MF02E4C16	0.87
	16	4.8	0	10	10	10	10	8	8	120	SMS1MF02V1C16	SMS1MF02V4C16	0.87
1/2"	16	4.8	0	10	10	10	10	8	8	80	SMS1MF02N1D16	SMS1MF02N4D16	0.87
	16	4.8	0	10	10	10	10			130	SMS1MF02E1D16	SMS1MF02E4D16	0.87
	16	4.8	0	10	10	10	10	8	8	120	SMS1MF02V1D16	SMS1MF02V4D16	0.87
3/4"	20	7.6	0	10	10	10	10	8	8	80	SMS1MF02N1E20	SMS1MF02N4E20	1.04
	20	7.6	0	10	10	10	10			130	SMS1MF02E1E20	SMS1MF02E4E20	1.04
	20	7.6	0	10	10	10	10	8	8	120	SMS1MF02V1E20	SMS1MF02V4E20	1.04
1"	20	7.6	0	10	10	10	10	8	8	80	SMS1MF02N1G20	SMS1MF02N4G20	1.2
	20	7.6	0	10	10	10	10			130	SMS1MF02E1G20	SMS1MF02E4G20	1.2
	20	7.6	0	10	10	10	10	8	8	120	SMS1MF02V1G20	SMS1MF02V4G20	1.2
	25	12	0	10	10	10	10	8	8	80	SMS1MF02N1G25	SMS1MF02N4G25	1.37
	25	12	0	10	10	10	10			130	SMS1MF02E1G25	SMS1MF02E4G25	1.37
	25	12	0	10	10	10	10	8	8	120	SMS1MF02V1G25	SMS1MF02V4G25	1.37
1 1/4"	32	24	0	10	10	10	10	8	8	80	SMS1MF02N1H32	SMS1MF02N4H32	2.1
	32	24	0	10	10	10	10			130	SMSMF02E1H32	SMSMF02E4H32	2.1
	32	24	0	10	10	10	10	8	8	120	SMS1MF02V1H32	SMS1MF02V4H32	2.1
1 1/2"	32	24	0	10	10	10	10	8	8	80	SMS1MF02N1J32	SMS1MF02N4J32	2.4
	32	24	0	10	10	10	10			130	SMSMF02E1J32	SMSMF02E4J32	2.4
	32	24	0	10	10	10	10	8	8	120	SMS1MF02V1J32	SMS1MF02V4J32	2.4
	40	29	0	10	10	10	10	8	8	80	SMS1MF02N1J40	SMS1MF02N4J40	2.5
	40	29	0	10	10	10	10			130	SMSMF02E1J40	SMSMF02E4J40	2.5
	40	29	0	10	10	10	10	8	8	120	SMS1MF02V1J40	SMS1MF02V4J40	2.5
2"	40	29	0	10	10	10	10	8	8	80	SMS1MF02N1K40	SMS1MF02N4K40	2.9
	40	29	0	10	10	10	10			130	SMSMF02E1K40	SMSMF02E4K40	2.9
	40	29	0	10	10	10	10	8	8	120	SMS1MF02V1K40	SMS1MF02V4K40	2.9
	50	48	0	10	10	10	10	8	8	80	SMS1MF02N1K50	SMS1MF02N4K50	4.3
	50	48	0	10	10	10	10			130	SMSMF02E1K50	SMSMF02E4K50	4.3
	50	48	0	10	10	10	10	8	8	120	SMS1MF02V1K50	SMS1MF02V4K50	4.3

SMS 2/2-way flange connection direct acting solenoid valve·normally closed



Valve Selection List

Orifice mm	CV Factor	Operating pressure differential (kgf/cm²) Min.	Max. Air Gas AC	Max. Air Gas DC	Max. Water Hot water Liquids AC	Max. Water Hot water Liquids DC	Max. Light oil ≤20CST AC	Max. Light oil ≤20CST DC	Max. fluids Temp. ℃	Coil Type	Coil Class	Model Code Follows Voltage are 220VAC	Weight Kg
15	4.8	0	10	10	10	10	8	8	80	M	F	SMS1MF02N4F15	1.77
15	4.8	0	10	10	10	10			130	M	F	SMS1MF02E4F15	
15	4.8	0	10	10	10	10	8	8	120	M	F	SMS1MF02V4F15	
20	7.6	0	10	10	10	10	8	8	80	M	F	SMS1MF02N4F20	1.97
20	7.6	0	10	10	10	10			130	M	F	SMS1MF02E4F20	
20	7.6	0	10	10	10	10	8	8	120	M	F	SMS1MF02V4F20	
25	12	0	10	10	10	10	8	8	80	M	F	SMS1MF02N4F25	2.87
25	12	0	10	10	10	10			130	M	F	SMS1MF02E4F25	
25	12	0	10	10	10	10	8	8	120	M	F	SMS1MF02V4F25	
32	24	0	10	10	10	10	8	8	80	M	F	SMS1MF02N4F32	4.4
32	24	0	10	10	10	10			130	M	F	SMS1MF02E4F32	
32	24	0	10	10	10	10	8	8	120	M	F	SMS1MF02V4F32	
40	29	0	10	10	10	10	8	8	80	M	F	SMS1MF02N4F40	4.8
40	29	0	10	10	10	10			130	M	F	SMS1MF02E4F40	
40	29	0	10	10	10	10	8	8	120	M	F	SMS1MF02V4F40	
50	48	0	10	10	10	10	8	8	80	M	F	SMS1MF02N4F50	7.8
50	48	0	10	10	10	10			130	M	F	SMS1MF02E4F50	
50	48	0	10	10	10	10	8	8	120	M	F	SMS1MF02V4F50	

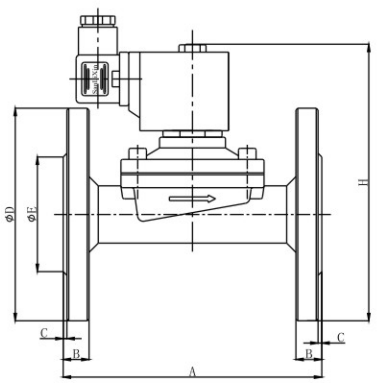

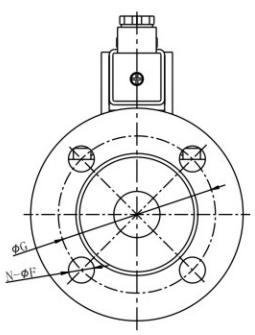

Model	A	B	C	D	E	N	F	G	H
SMS-15BF	106	12	2	95	45	4	14	65	135
SMS-20BF	106	12	2	105	56	4	14	75	138
SMS-25BF	140	14	2	115	62	4	14	85	150
SMS-32BF	152	15	2	135	76	4	18	100	173
SMS-40BF	152	15	2	145	84	4	18	110	183
SMS-50BF	195	16	2	160	98	4	18	125	197

SMS series coil parameters tables

Coils Model code	Voltage	Power consumption		DC (W)		Orifice mm
		Inrush	Holding	Inrush	Holding	
SM-3101	AC220V	78VA	4.5VA	350mA	20mA	Diaphragm Type Φ15~Φ25
SM-3102	AC110V	72VA	5.0VA	660mA	45mA	
SM-3106	DC24V	80W	7.2W	3300mA	310mA	
SM-3104	AC24V	52VA	6.3VA	2600mA	320mA	
SM-3107	DC12V	35W	8.5W	2900mA	700mA	
SM-4101	AC220V	130VA	6.0VA	590mA	28mA	Direct Acting Type Φ2~Φ7.5 Diaphragm Type Φ32~Φ50
SM-4102	AC110V	95VA	8.0VA	900mA	75mA	
SM-4106	DC24V	98W	8.8W	4050mA	365mA	
SM-4104	AC24V	66VA	6.8VA	3400mA	360mA	
SM-4107	DC12V	45W	4.5W	3750mA	380mA	

SMP compact series 2/2-way direct acting solenoid valve · normally closed

Solenoid Valves Model Numbering System for Order

1	2	3	4	5	6	7	8	9	10
Valve Series	Mode of Operation	Coil Type	Coil Class	Voltage	Seal Material	Body Material	Pipe Size	Orifice (mm)	Options
SMP	**1**	**M**	**F**	**02**	**N**	**1**	**B**	**03**	□
SMP	1:Normally Closed	M=SM Series Coil	F=F Class	02= AC220V AC230V 01= AC110V AC120V 05=AC24V 13=DC24V 12=DC12V	N=NBR V=VITON E=EPDM	1= Forged brass 3=SS316	A=1/8" B=1/4"	02=2.0 C3=2.5 03=3.0 04=4.0 05=5.0 06=6.0 C8=7.5	L= Neon lamp N= NPT pipe size P=PT R=RC T=Timer
							C=3/8"	03=3.0 04=4.0	
						1= Forged brass 4=SS304	C=3/8" D=1/2"	05=5.0 06=6.0	

SMP compact series 2/2-way direct acting solenoid valve · normally closed

1.2/2-way Compact Direct Acting Solenoid Valve, closed when de- energized,open when energized.

2.The product is special design, power will be normal type 1/4,low temperature,small in size,large flow rate,widely use.

3.Body material: Forged Brass、Stainless Steel

4.Ambient temp.:0℃~65℃ Fluids temp.: 0℃~130℃

5.Flow as the arrow,mounts in any position;Best position is solenoid vertical and upright direction.

6.Voltage:AC 220V/230V/110V/24V DC 24V DC 12V Voltage Tolerance:+10% to -10% applicable voltage

7.This series valve are offered NBR、VITON、EPDM etc for seals and diaphragm to provide on-off various fluids.

Normally Closed De-energized Energized



φ2、φ2.5、φ3、φ4 （1/8″、1/4″、3/8″）

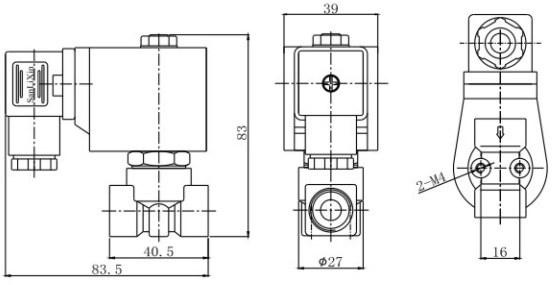

φ4、φ5、φ6、φ7.5 （1/8″、1/4″）

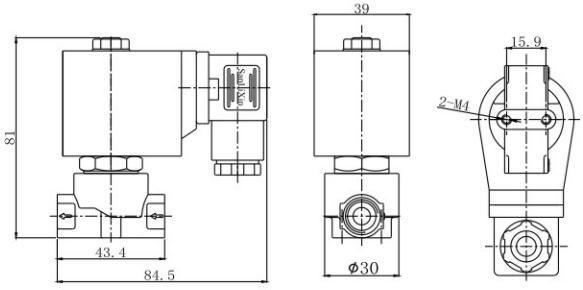

φ5、φ6（3/8″、1/2″）

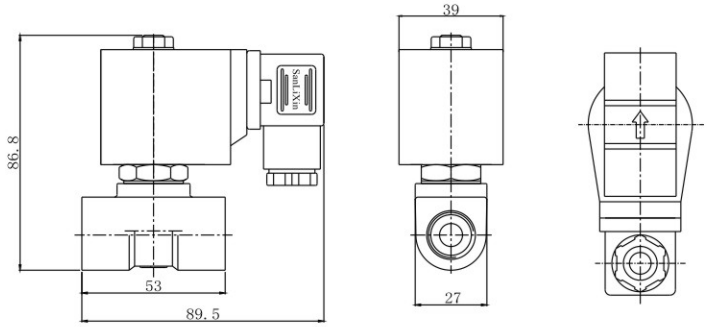

SMP compact series 2/2-way direct acting solenoid valve · normally closed





Valve Selection List

Pipe Conn -ection	Orifice mm	CV Factor	Operating pressure differential (kgf/cm²) Min.	Max. Air Gas AC	Max. Air Gas DC	Max. Water Hot water Liquids AC	Max. Water Hot water Liquids DC	Max. Light oil ≤20CST AC	Max. Light oil ≤20CST DC	Coil Type	Coil Class	Max. fluids Temp. ℃	Model Code Follows Voltage are 220VAC Forged Brass	Model Code Follows Voltage are 220VAC SS316	Weight Kg
1/8"	2	0.14	0	30	30	30	30	30	30	M	F	80	SMP1MF02N1A02	SMP1MF02N3A02	
	2	0.14	0	30	30	30	30	—	—	M	F	130	SMP1MF02E1A02	SMP1MF02E3A02	0.48
	2	0.14	0	30	30	30	30	30	30	M	F	120	SMP1MF02V1A02	SMP1MF02V3A02	
	2.5	0.23	0	30	30	30	30	30	25	M	F	80	SMP1MF02N1AC3	SMP1MF02N3AC3	
	2.5	0.23	0	30	30	30	30	—	—	M	F	130	SMP1MF02E1AC3	SMP1MF02E3AC3	0.48
	2.5	0.23	0	30	30	30	30	30	25	M	F	120	SMP1MF02V1AC3	SMP1MF02V3AC3	
	3	0.25	0	30	28	30	28	30	25	M	F	80	SMP1MF02N1A03	SMP1MF02N3A03	
	3	0.25	0	30	28	30	28	—	—	M	F	130	SMP1MF02E1A03	SMP1MF02E3A03	0.48
	3	0.25	0	30	28	30	28	30	25	M	F	120	SMP1MF02V1A03	SMP1MF02V3A03	
	4	0.6	0	30	24	30	24	30	20	M	F	80	SMP1MF02N1A04	SMP1MF02N3A04	
	4	0.6	0	30	24	30	24	—	—	M	F	130	SMP1MF02E1A04	SMP1MF02E3A04	0.48
	4	0.6	0	30	24	30	24	30	20	M	F	120	SMP1MF02V1A04	SMP1MF02V3A04	
	5	0.65	0	16	12	16	12	16	8	M	F	80	SMP1MF02N1A05	SMP1MF02N3A05	
	5	0.65	0	16	12	16	12	—	—	M	F	130	SMP1MF02E1A05	SMP1MF02E3A05	0.46
	5	0.65	0	16	12	16	12	16	8	M	F	120	SMP1MF02V1A05	SMP1MF02V3A05	
	6	0.8	0	8	8	8	8	8	8	M	F	80	SMP1MF02N1A06	SMP1MF02N3A06	
	6	0.8	0	8	8	8	8	—	—	M	F	130	SMP1MF02E1A06	SMP1MF02E3A06	0.46
	6	0.8	0	8	8	8	8	8	8	M	F	120	SMP1MF02V1A06	SMP1MF02V3A06	
1/4"	2	0.14	0	30	30	30	30	30	30	M	F	80	SMP1MF02N1B02	SMP1MF02N3B02	
	2	0.14	0	30	30	30	30	—	—	M	F	130	SMP1MF02E1B02	SMP1MF02E3B02	0.47
	2	0.14	0	30	30	30	30	30	30	M	F	120	SMP1MF02V1B02	SMP1MF02V3B02	
	2.5	0.23	0	30	30	30	30	30	25	M	F	80	SMP1MF02N1BC3	SMP1MF02N3BC3	
	2.5	0.23	0	30	30	30	30	—	—	M	F	130	SMP1MF02E1BC3	SMP1MF02E3BC3	0.47
	2.5	0.23	0	30	30	30	30	30	25	M	F	120	SMP1MF02V1BC3	SMP1MF02V3BC3	
	3	0.25	0	30	28	30	28	30	25	M	F	80	SMP1MF02N1B03	SMP1MF02N3B03	
	3	0.25	0	30	28	30	28	—	—	M	F	130	SMP1MF02E1B03	SMP1MF02E3B03	0.47
	3	0.25	0	30	28	30	28	30	25	M	F	120	SMP1MF02V1B03	SMP1MF02V3B03	
	4	0.6	0	30	24	30	24	30	20	M	F	80	SMP1MF02N1B04	SMP1MF02N3B04	
	4	0.6	0	30	24	30	24	—	—	M	F	130	SMP1MF02E1B04	SMP1MF02E3B04	0.47
	4	0.6	0	30	24	30	24	30	20	M	F	120	SMP1MF02V1B04	SMP1MF02V3B04	
	5	0.65	0	16	12	16	12	16	8	M	F	80	SMP1MF02N1B05	SMP1MF02N3B05	
	5	0.65	0	16	12	16	12	—	—	M	F	130	SMP1MF02E1B05	SMP1MF02E3B05	0.45
	5	0.65	0	16	12	16	12	16	8	M	F	120	SMP1MF02V1B05	SMP1MF02V3B05	
	6	0.8	0	8	8	8	8	8	8	M	F	80	SMP1MF02N1B06	SMP1MF02N3B06	
	6	0.8	0	8	8	8	8	—	—	M	F	130	SMP1MF02E1B06	SMP1MF02E3B06	0.45
	6	0.8	0	8	8	8	8	8	8	M	F	120	SMP1MF02V1B06	SMP1MF02V3B06	

SMP compact series 2/2-way direct acting solenoid valve · normally closed



Valve Selection List

Pipe Conn -ection	Orifice mm	CV Factor	Operating pressure differential(kgf/cm²) Min.	Max. Air Gas AC	Max. Air Gas DC	Max. Water Hot water Liquids AC	Max. Water Hot water Liquids DC	Max. Light oil ≤20CST AC	Max. Light oil ≤20CST DC	Coil Type	Coil Class	Max. fluids Temp. ℃	Model Code Follows Voltage are 220VAC Forged Brass	Model Code Follows Voltage are 220VAC SS316	Weight Kg
3/8"	3	0.25	0	30	28	30	28	30	25	M	F	80	SMP1MF02N1C03	SMP1MF02N3C03	
	3	0.25	0	30	28	30	28	---	---	M	F	130	SMP1MF02E1C03	SMP1MF02E3C03	0.47
	3	0.25	0	30	28	30	28	30	25	M	F	120	SMP1MF02V1C03	SMP1MF02V3C03	
	4	0.6	0	30	24	30	24	30	20	M	F	80	SMP1MF02N1C04	SMP1MF02N3C04	
	4	0.6	0	30	24	30	24	---	---	M	F	130	SMP1MF02E1C04	SMP1MF02E3C04	0.47
	4	0.6	0	30	24	30	24	30	20	M	F	120	SMP1MF02V1C04	SMP1MF02V3C04	
	5	0.65	0	16	12	16	12	16	12	M	F	80	SMP1MF02N1C05	SMP1MF02N4C05	
	5	0.65	0	16	12	16	12	---	---	M	F	130	SMP1MF02E1C05	SMP1MF02E4C05	0.56
	5	0.65	0	16	12	16	12	16	12	M	F	120	SMP1MF02V1C05	SMP1MF02V4C05	
	6	0.8	0	8	8	8	8	8	8	M	F	80	SMP1MF02N1C06	SMP1MF02N4C06	
	6	0.8	0	8	8	8	8	---	---	M	F	130	SMP1MF02E1C06	SMP1MF02E4C06	0.56
	6	0.8	0	8	8	8	8	8	8	M	F	120	SMP1MF02V1C06	SMP1MF02V4C06	
1/2"	5	0.65	0	16	12	16	12	16	12	M	F	80	SMP1MF02N1D05	SMP1MF02N4D05	
	5	0.65	0	16	12	16	12	---	---	M	F	130	SMP1MF02E1D05	SMP1MF02E4D05	0.55
	5	0.65	0	16	12	16	12	16	12	M	F	120	SMP1MF02V1D05	SMP1MF02V4D05	
	6	0.8	0	8	8	8	8	8	8	M	F	80	SMP1MF02N1D06	SMP1MF02N4D06	
	6	0.8	0	8	8	8	8	---	—	M	F	130	SMP1MF02E1D06	SMP1MF02E4D06	0.55
	6	0.8	0	8	8	8	8	8	8	M	F	120	SMP1MF02V1D06	SMP1MF02V4D06	

SMP Series Coil parameters tables

Coils Model code	Voltage	Power consumption Inrush	Power consumption Holding	DC（W） Inrush	DC（W） Holding
SM-3101	AC220V	78VA	4.5VA	350mA	20mA
SM-3102	AC110V	72VA	5.0VA	660mA	45mA
SM-3106	DC24V	80W	7.2W	3300mA	310mA
SM-3104	AC24V	52VA	6.3VA	2600mA	320mA
SM-3107	DC12V	35W	8.5W	2900mA	700mA

SMG series 2/2-way high pressure solenoid valve·normally closed

Solenoid Valves Model Numbering System for Order

1	2	3	4	5	6	7	8	9	10
Valve Series	Mode of Operation	Coil Type	Coil Class	Voltage	Seal Material	Body Material	Pipe Size	Orifice（mm）	Options
SMG	**1**	**M**	**F**	**02**	**N**	**1**	**B**	**03**	□
SMG	1:Normally Closed	M=SM Series Coil	F=F Class	02= AC220V AC230V 01= AC110V AC120V 13=DC24V 12=DC12V	N=NBR V=VITON E=EPDM	1= Forged brass	A=1/8 " B=1/4 "	02=2.0 C3=2.5 03=3.0 08=8.0	L= Neon lamp
						3=SS316 4=SS304 5=SS316	A=1/8 " B=1/4 "	C2=1.5 02=2.0 C3=2.5 03=3.0 06=6.0 08=8.0	N=NPT
						1= Forged brass 3=SS316 4=SS304 5=SS316	C=3/8"	03=3.0 04=4.0 06=6.0 08=8.0	P=PT
						1= Forged brass 4=SS304 5=SS316	C=3/8" D=1/2"	06=6.0 08=8.0 15=15.0	R=RC
							E=3/4"	20=20.0	T=Timer
							G=1"	25=25.0	

SMG Series Coil parameters tables

Coils Model code	Voltage	Power		Electricity		Orifice mm
		Inrush	Holding	Inrush	Holding	
SM-3101	AC220V	78VA	4.5VA	350mA	20mA	Φ1.5~Φ4.0 Φ6.0~Φ10.0 Φ15~Φ25
SM-3102	AC110V	72VA	5.0VA	660mA	45mA	
SM-3106	DC24V	80W	7.2W	3300mA	310mA	
SM-3104	AC24V	52VA	6.3VA	2600mA	320mA	
SM-3107	DC12V	35W	8.5W	2900mA	700mA	
SM-4101	AC220V	130VA	6.0VA	590mA	28mA	Φ8.0
SM-4102	AC110V	95VA	8.0VA	900mA	75mA	
SM-4106	DC24V	98W	8.8W	4050mA	365mA	
SM-4104	AC24V	66VA	6.8VA	3400mA	360mA	
SM-4107	DC12V	45W	4.5W	3750mA	380mA	

SMG series 2/2-way high pressure solenoid valve·normally closed

1. 2/2-way normally closed direct acting solenoid valve, closed when de-energized,open when energized.
2. The product is special design, power will be normal type 1/4,low temperature,small in size,large flow rate,widely use.
3. Body material: forged brass、SS316
4. Ambient temp.:0℃~65℃ Fluids temp.: 0℃~110℃
5. Flow as the arrow,mounts in any position;Best position is solenoid vertical and upright direction.
6. Voltage:AC 220V/230V/110V/24V DC 24V DC12V Voltage Tolerance:+10% to -10% applicable voltage
7. This series valve are offered NBR、VITON、EPDM、TEFLON etc for seals and diaphragm to provide on-off various fluids.



Normally Closed

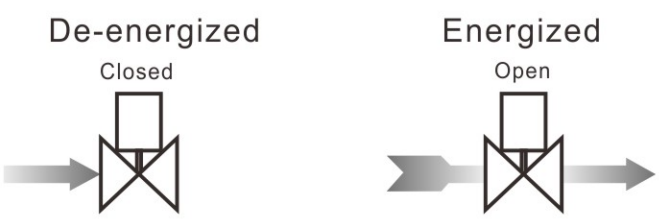

Φ6（1/8-1/2）

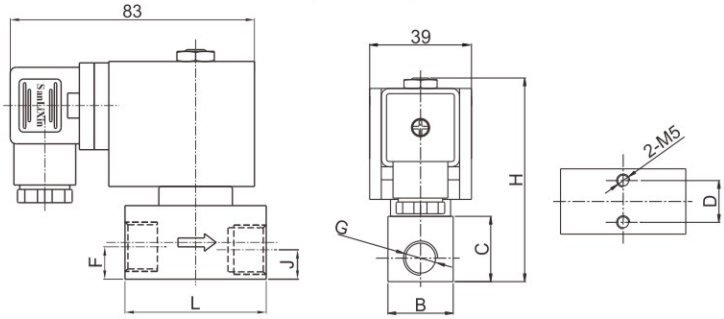

Orifice mm	Size G	L	B	C	D	E	F	J	H
Φ6.0	1/8"	48	25	25	16	M5	9	9	78
	1/4"	48	25	25	16		9	9	78
	3/8"	50	30	30	20		13	13	83
	1/2"	58	32	32	20		13	13	85
Φ8.0 Φ10.0	1/4"	67	35	35	22	M6	17.5	13	85
	3/8"	67	35	35	22		16	13	85
	1/2"	67	35	35	22		14.5	13	85

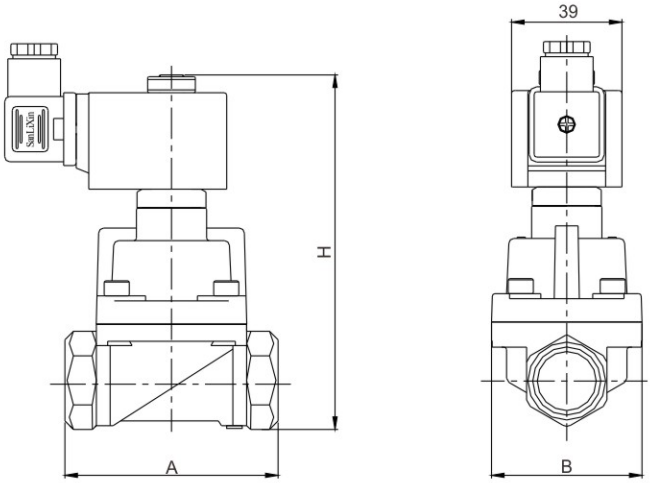

Orifice mm	A	B	H
15	75	52	132
20	85	60	142
25	100	72	154

SMG series 2/2-way high pressure solenoid valve·normally closed

Valve Selection List

Pipe Conn-ection	Orifice mm	CV Factor	Operating pressure differential (kgf/cm²) Min.	Max. Air Gas AC	Max. Air Gas DC	Max. Water Liquids AC	Max. Water Liquids DC	Max. Light oil ≤20CST AC	Max. Light oil ≤20CST DC	Coil Type	Coil Class	Max. fluids Temp. ℃	Model Code Follows Voltage are 220VAC seal material is VITON Forged Brass	Model Code Follows Voltage are 220VAC seal material is VITON Stainless Steel	Weight Kg
1/8"	1.5	0.08	0	190	170	190	170	190	170	M	F	110	----------	SMG1MF02V3AC2	0.48
	2.0	0.14	0	120	100	120	100	120	100	M	F	110	SMG1MF02V1A02	SMG1MF02V3A02	
	2.5	0.23	0	80	80	80	80	80	80	M	F	110	SMG1MF02V1AC3	SMG1MF02V3AC3	
	3.0	0.25	0	50	50	50	50	50	50	M	F	110	SMG1MF02V1A03	SMG1MF02V3A03	
1/4"	1.5	0.08	0	190	170	190	170	190	170	M	F	110	----------	SMG1MF02V3BC2	0.47
	2.0	0.14	0	120	100	120	100	120	100	M	F	110	SMG1MF02V1B02	SMG1MF02V3B02	
	2.5	0.23	0	80	80	80	80	80	80	M	F	110	SMG1MF02V1BC3	SMG1MF02V3BC3	
	3.0	0.25	0	50	50	50	50	50	50	M	F	110	SMG1MF02V1B03	SMG1MF02V3B03	
	6.0	0.8	0.5	150	150	150	150	150	150	M	F	110	----------	SMG1MF02V5B06	0.57
	8.0	1.0	0.5	150	150	150	150	150	150	M	F	110	----------	SMG1MF02V5B08	0.92
	10.0	1.2	0.5	150	150	150	150	150	150	M	F	110	----------	SMG1MF02V5B10	0.92
	8.0	1.0	1	110	90	110	90	110	90	M	F	110	SMG1MF02V1B08	SMG1MF02V4B08	1.18
3/8"	3.0	0.25	0	50	50	50	50	50	50	M	F	110	SMG1MF02V1C03	SMG1MF02V3C03	0.47
	4.0	0.6	0	30	24	30	24	30	24	M	F	110	SMG1MF02V1C04	SMG1MF02V3C04	
	6.0	0.8	0.5	150	150	150	150	150	150	M	F	110	----------	SMG1MF02V5C06	0.65
	8.0	1.2	0.5	150	150	150	150	150	150	M	F	110	----------	SMG1MF02V5C08	0.9
	10.0	1.5	0.5	150	150	150	150	150	150	M	F	110	----------	SMG1MF02V5C10	0.9
	8.0	1.2	1	110	90	110	90	110	90	M	F	110	SMG1MF02V1C08	SMG1MF02V4C08	1.16
	15	4.2	1	100	100	100	100	100	100	M	F	110	SMG1MF02V1C15	SMG1MF02V4C15	1.35
1/2"	6.0	0.8	0.5	150	150	150	150	150	150	M	F	110	----------	SMG1MF02V5D06	0.7
	8.0	1.2	0.5	150	150	150	150	150	150	M	F	110	----------	SMG1MF02V5D08	0.9
	10.0	1.5	0.5	150	150	150	150	150	150	M	F	110	----------	SMG1MF02V5D10	0.9
	8.0	1.2	1	110	90	110	90	110	90	M	F	110	SMG1MF02V1D08	SMG1MF02V4D08	1.15
	15	4.2	1	100	100	100	100	100	100	M	F	110	SMG1MF02V1D15	SMG1MF02V4D15	1.25
3/4"	20	7	1	80	80	80	80	80	80	M	F	110	SMG1MF02V1E20	SMG1MF02V4E20	1.53
1"	25	11	1	65	65	65	65	65	65	M	F	110	SMG1MF02V1G25	SMG1MF02V4G25	2.27

Φ1.5– Φ4(1/8"–3/8")

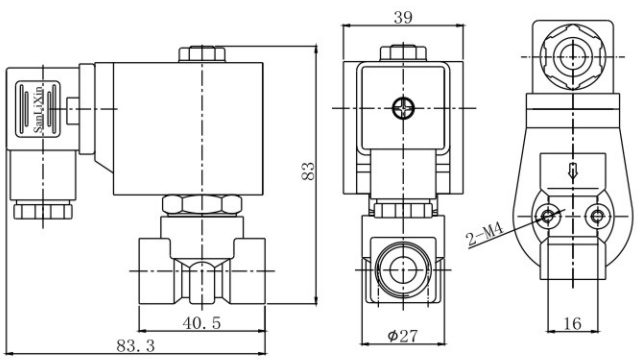

Φ8 (1/4"–1/2")

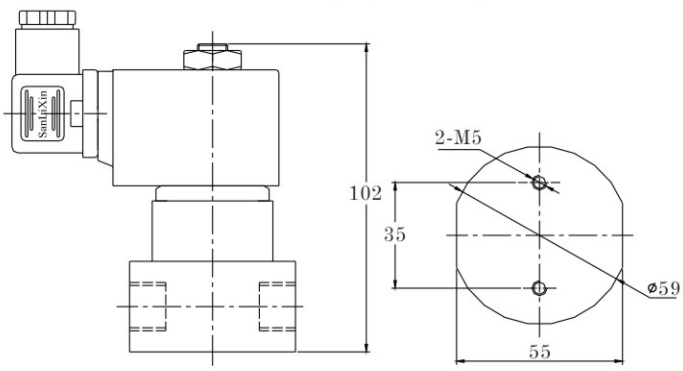

SMZ series 2/2-way high pressure solenoid valve · normally closed

1.2/2-way Super High Pressure Solenoid Valve, closed when de-energized,
open when energized.
2.The product is special design, power will be normal type 1/4,
low temperature,High pressure,Stable performance,widely use.
3.Body material: Stainless Steel
4.Ambient temp.:0℃~65℃ Fluids temp.: 0℃~110℃
5.Flow as the arrow,mounts in any position;Best position is solenoid vertical
and upright direction.
6.Voltage:AC 220V/230V/110V/24V DC 24V DC 12V
Voltage Tolerance:+10% to -10% applicable voltage
7.seal material is PTFE、PEEK



Solenoid Valves Model Numbering System for Order

1	2	3	4	5	6	7	8	9	10
Valve Series	Mode of Operation	Coil Type	Coil Class	Voltage	Seal Material	Body Material	Pipe Size	Orifice（mm）	Options
SMZ	1	M	F	02	K	3	A	01	□
SMZ	1:Normally Closed	M=SM Series Coil	F=F Class	02= AC220V 01= AC110V 13= DC24V	K=PEEK T=PTFE	3=SS316	A=1/8 " B=1/4 " C=3/8" D=1/2" E=3/4" G=1"	01=1.0 C1=1.2 C2=1.5	N=NPT
								10=10.0 15=15.0 20=20.0 25=25.0	W=Liquid A=Air

SMZ Series Coil parameters Tables

Coils Model Code	Voltage	Power		Electricity	
		Inrush	Holding	Inrush	Holding
SM-4101	AC220V	130VA	6.0VA	590mA	28mA
SM-4102	AC110V	95VA	8.0VA	900mA	75mA
SM-4106	DC24V	98W	8.8W	4050mA	365mA
SM-4104	AC24V	66VA	6.8VA	3400mA	360mA
SM-4107	DC12V	45W	4.5W	3750mA	380mA

SMZ series 2/2-way high pressure solenoid valve · normally closed

Valve Selection List

Pipe Connection	Orifice mm	CV Factor	Operating pressure differential (kgf/cm²) Min.	Max. Air Gas AC	Max. Air Gas DC	Max. Water Hot water Liquids AC	Max. Water Hot water Liquids DC	Max. Light oil ≤20CST AC	Max. Light oil ≤20CST DC	Coil Type	Coil Class	Max. fluids Temp. ℃	Model Code Follows Voltage is 220VAC seal material is PEEK	Weight Kg
1/8"	1.0	0.04	0	360	260	360	260	360	260	M	F	110	SMZ1MF02K3A01	0.8
	1.2	0.05	0	300	240	300	240	300	240	M	F	110	SMZ1MF02K3AC1	
	1.5	0.08	0	250	190	250	190	250	190	M	F	110	SMZ1MF02K3AC2	
1/4"	1.0	0.04	0	360	260	360	260	360	260	M	F	110	SMZ1MF02K3B01	0.8
	1.2	0.05	0	300	240	300	240	300	240	M	F	110	SMZ1MF02K3BC1	
	1.5	0.08	0	250	190	250	190	250	190	M	F	110	SMZ1MF02K3BC2	
	10	1.8	1	360	300	360	300	360	300	M	F	110	SMZ1MF02K3B10W	3.0
3/8"	10	2.1	1	360	300	360	300	360	300	M	F	110	SMZ1MF02K3C10W	3.0
	15	3.5	1	360	300	360	300	360	300	M	F	110	SMZ1MF02K3C15W	2.6
1/2"	10	2.1	1	360	300	360	300	360	300	M	F	110	SMZ1MF02K3D10W	3.0
	15	3.5	1	360	300	360	300	360	300	M	F	110	SMZ1MF02K3D15W	2.6
3/4"	20	6.5	1	300	240	300	240	300	240	M	F	110	SMZ1MF02K3E20W	3.6
1"	25	10	1	300	240	300	240	300	240	M	F	110	SMZ1MF02K3G25W	5.3

Note:Working pressure above 150kgf/cm², seal material need choose PEEK

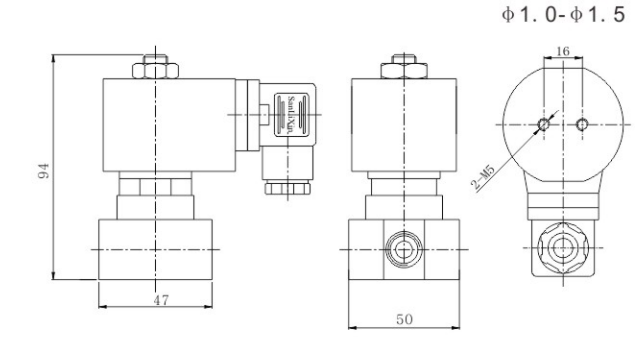

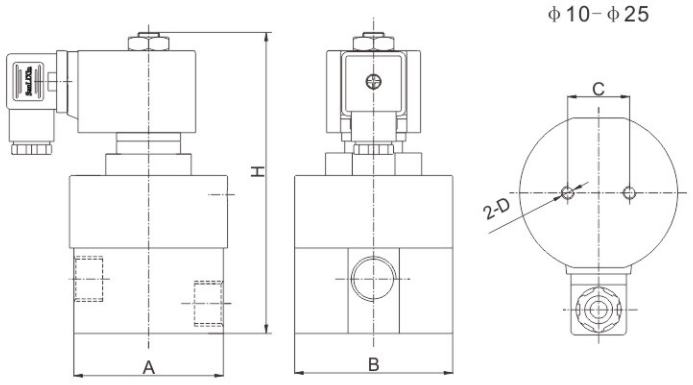

Model	A	B	H	C	D
SMZ-10B	70	74	141	29	M6
SMZ-15B	70	74	141	29	M6
SMZ-20B	79	84	150	36	M6
SMZ-25B	93	99	160	45	M8

SMZ series 2/2-way zero leakage super high pressure solenoid valve · normally closed

1.2/2-way super high pressure solenoid valve, closed when de-energized, open when energized.
2.Body material: SS316
3 Working pressure: 0~700Bar
4.Voltage:AC 220V/230V/110V/24V
Voltage Tolerance:+10% to -10% applicable voltage
5.Medium: water、air
6.Orifice size: ϕ0.5mm
7.Pipe size:1/8"、 1/4"
8.Ambient temp.:0℃~65℃
9.Flow as the arrow,mounts in any position;Best position is solenoid vertical



Solenoid Valves Model Numbering System for Order

1	2	3	4	5	6	7	8	9	10
Valve Series	Mode of Operation	Coil Type	Coil Class	Voltage	Seal Material	Body Material	Pipe Size	Orifice（mm）	Options
SMZ	**1**	**M**	**F**	**02**	**K**	**3**	**A**	**C05**	□
SMZ	1:Normally Closed	M=SM Series Coil	F=F Class	02= AC220V 01= AC110V 13= DC24V	K=PEEK P=PCTFE	3=SS316	A=1/8 " B=1/4 "	C05=0.5	N=NPT

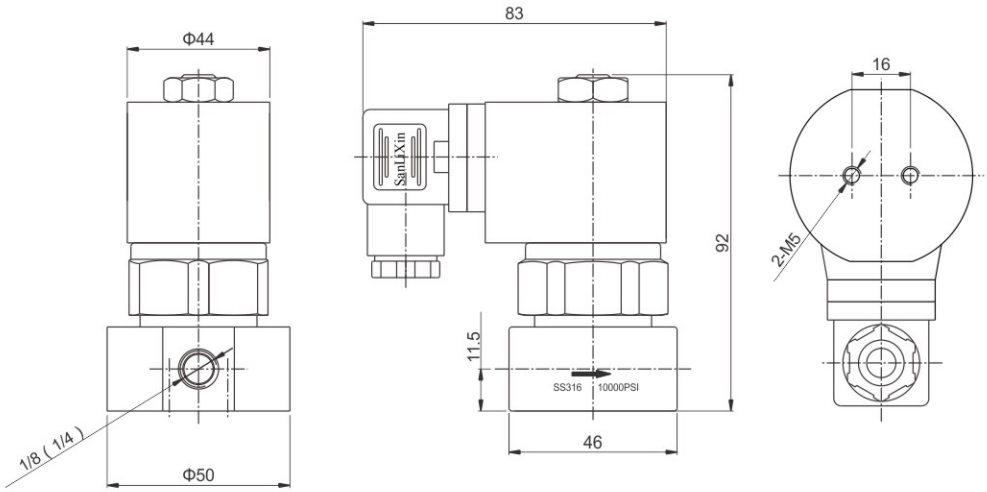

SMZ series 2/2-way zero leakage super high pressure solenoid valve · normally closed

Valve Selection List

Pipe Conn -ection	Orifice mm	CV Factor	Operating pressure differential (kgf/cm²)		Max. fluids Temp. ℃	Coil Type	Coil Class	Model Code Follows Voltage is 24VDC	Weight Kg
			Min.	Max.					
1/8"	0.5	0.02	0	700	80	M	F	SMZ1MF13K3AC05	0.87
1/4"	0.5	0.02	0	700	80	M	F	SMZ1MF13K3BC05	

Coil parameters Tables

Coils Model Code	Voltage	Power		Electricity	
		Inrush	Holding	Inrush	Holding
SM-4101	AC220V	130VA	6.0VA	590mA	28mA
SM-4102	AC110V	95VA	8.0VA	900mA	75mA
SM-4106	DC24V	45W	4.5W	3750mA	380mA

SQK air operated valve

Features :

1. Unique sealing member isolates pilot air pressure from mainline fluid
2. Variations in pilot air pressure do not affect valve operation
3. Design provides long life handing of lubricated air
4. Body material : Brass Stainless steel
5. According to the different directional valve, the valve can be normally closed and normally open
6. Diverting valve operated pressure： 3-7bar
7. Air operate pipe size：1/8







Construction

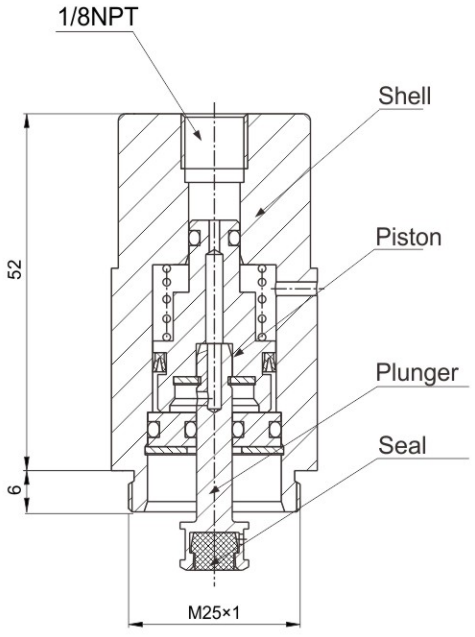

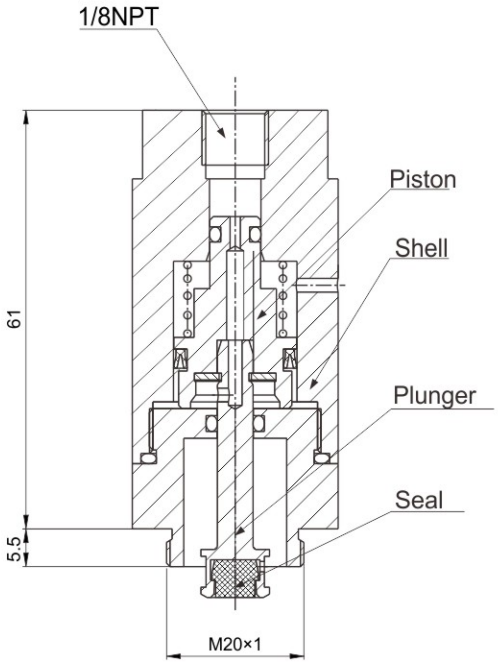

SQKS 2/2-way direct acting air operated valve · normally closed

1. 2/2-way normally closed air operated valve, use air operate to replace solenoid drive to operated the valve open and closed
2. Ambient temperature: 0℃~65℃;
3. Control pressure: 3 ~ 7kgf/cm^2;
4. Working pressure: 0 ~ 10kgf/cm^2;
5. Body material: Brass, Stainless steel;
6. Seal material : NBR、VITON、EPDM and so on
7. Flow as the arrow, best position is the air operated upright direction.





Air Operated Valves Model Numbering System for Order

1	2	3	4	5	6	7	8	9
Valve Series	Mode of Operation	Air operated type	Air operated material	Seal material	Body material	Pipe size	Orifice (mm)	Options
SQKS	**1**	**H**	**D**	**N**	**1**	**D**	**16**	□
SQKS	1:Normally Closed 2:Normally Open	H= piston type	D=Brass B=Stainless steel	N=NBR V=VITON E=EPDM	1=Brass 4=SS304 3=SS316 7=Plastic	B=1/4" C=3/8 " C=3/8 " D=1/2 " E=3/4 " G=1 " H=1 1/4" J=1 1/2" K=2" F=Flange connection	04=4.0 16=16.0 20=20.0 20=20.0 25=25.0 32=32.0 32=32.0 40=40.0 40=40.0 50=50.0 15=15.0 20=20.0 25=25.0 35=35.0 40=40.0 50=50.0	N=NPT Y= Signal feedback

External Dimensions:

DN4.0

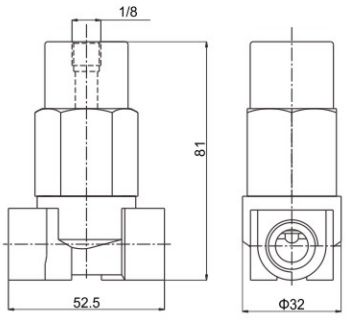

DN16~50

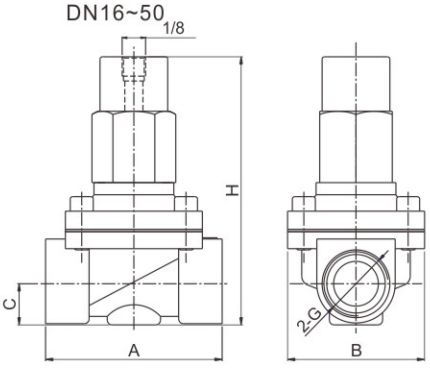

Orifice (mm)	G	A	B	C	H
16	3/8	69	57	14.5	104
	1/2	69	57	14.5	104
20	3/4	73	57	17	111
	1	80	62	20	114
25	1	99	77	21	120
32	1–1/4	112	86.5	24	128
	1–1/2	120	86.5	28	138
40	1–1/2	123	94	28	138
	2	130	94	35	152
50	2	165	120	35	153

SQKS 2/2-way direct acting air operated valve · normally closed

Valve Selection List

Pipe Conn -ection	Orifice mm	CV Factor	Operating pressure differential (kgf/cm²)				Min control pressure (kgf/cm²)	Max. fluids Temp. ℃	Model Code		Weight Kg
			Min.	Max.					Forged Brass	Stainless Steel	
				Air Gas	Water Liquids	Light oil ≤20CST					
1/4"	4	0.6	0	10	10	10	3 ~ 7	80	SQKS1HDN1B04	——	0.45
	4	0.6	0	10	10		3 ~ 7	120	SQKS1HDE1B04	——	0.45
	4	0.6	0	10	10	10	3 ~ 7	120	SQKS1HDV1B04	——	0.45
3/8"	4	0.6	0	10	10	10	3 ~ 7	80	SQKS1HDN1C04	SQKS1HDN4C04	0.43
	4	0.6	0	10	10		3 ~ 7	120	SQKS1HDE1C04	SQKS1HDE4C04	0.43
	4	0.6	0	10	10	10	3 ~ 7	120	SQKS1HDV1C04	SQKS1HDV4C04	0.43
3/8"	16	4.8	0	10	10	10	3 ~ 7	80	SQKS1HDN1C16	SQKS1HBN4C16	0.77
	16	4.8	0	10	10		3 ~ 7	120	SQKS1HDE1C16	SQKS1HBE4C16	0.77
	16	4.8	0	10	10	10	3 ~ 7	120	SQKS1HDV1C16	SQKS1HBV4C16	0.77
1/2"	16	4.8	0	10	10	10	3 ~ 7	80	SQKS1HDN1D16	SQKS1HBN4D16	0.77
	16	4.8	0	10	10		3 ~ 7	120	SQKS1HDE1D16	SQKS1HBE4D16	0.77
	16	4.8	0	10	10	10	3 ~ 7	120	SQKS1HDV1D16	SQKS1HBV4D16	0.77
3/4"	20	7.6	0	10	10	10	3 ~ 7	80	SQKS1HDN1E20	SQKS1HBN4E20	0.87
	20	7.6	0	10	10		3 ~ 7	120	SQKS1HDE1E20	SQKS1HBE4E20	0.87
	20	7.6	0	10	10	10	3 ~ 7	120	SQKS1HDV1E20	SQKS1HBV4E20	0.87
1	20	7.6	0	10	10	10	3 ~ 7	80	SQKS1HDN1G20	SQKS1HBN4G20	1.0
	20	7.6	0	10	10		3 ~ 7	120	SQKS1HDE1G20	SQKS1HBE4G20	1.0
	20	7.6	0	10	10	10	3 ~ 7	120	SQKS1HDV1G20	SQKS1HBV4G20	1.0
	25	12	0	10	10	10	3 ~ 7	80	SQKS1HDN1G25	SQKS1HBN4G25	1.42
	25	12	0	10	10		3 ~ 7	120	SQKS1HDE1G25	SQKS1HBE4G25	1.42
	25	12	0	10	10	10	3 ~ 7	120	SQKS1HDV1G25	SQKS1HBV4G25	1.42
11/4"	32	24	0	10	10	10	3 ~ 7	80	SQKS1HDN1H32	SQKS1HBN4H32	1.8
	32	24	0	10	10		3 ~ 7	120	SQKS1HDE1H32	SQKS1HBE4H32	1.8
	32	24	0	10	10	10	3 ~ 7	120	SQKS1HDV1H32	SQKS1HBV4H32	1.8
11/2"	32	24	0	10	10	10	3 ~ 7	80	SQKS1HDN1J32	SQKS1HBN4J32	2.1
	32	24	0	10	10		3 ~ 7	120	SQKS1HDE1J32	SQKS1HBE4J32	2.1
	32	24	0	10	10	10	3 ~ 7	120	SQKS1HDV1J32	SQKS1HBV4J32	2.1
	40	29	0	10	10	10	3 ~ 7	80	SQKS1HDN1J40	SQKS1HBN4J40	2.2
	40	29	0	10	10		3 ~ 7	120	SQKS1HDE1J40	SQKS1HBE4J40	2.2
	40	29	0	10	10	10	3 ~ 7	120	SQKS1HDV1J40	SQKS1HBV4J40	2.2
2"	40	29	0	10	10	10	3 ~ 7	80	SQKS1HDN1K40	SQKS1HBN4K40	2.6
	40	29	0	10	10		3 ~ 7	120	SQKS1HDE1K40	SQKS1HBE4K40	2.6
	40	29	0	10	10	10	3 ~ 7	120	SQKS1HDV1K40	SQKS1HBV4K40	2.6
	50	48	0	10	10	10	3 ~ 7	80	SQKS1HDN1K50	SQKS1HBN4K50	4.2
	50	48	0	10	10		3 ~ 7	120	SQKS1HDE1K50	SQKS1HBE4K50	4.2
	50	48	0	10	10	10	3 ~ 7	120	SQKS1HDV1K50	SQKS1HBV4K50	4.2

SQKS 2/2-way direct acting flange connection air operated valve · normally closed

Valve Selection List （Flange）

Orifice mm	CV Factor	Operating pressure differential (kgf/cm²) Min.	Max. Air Gas	Max. Water Liquids	Max. Light oil ≤20CST	Min control pressure (kgf/cm²)	Max. fluids Temp. ℃	Model Code	Weight Kg
15	4.8	0	10	10	10	3～7	80	SQKS1HBN4F15	1.85
15	4.8	0	10	10		3～7	120	SQKS1HBE4F15	1.85
15	4.8	0	10	10	10	3～7	120	SQKS1HBV4F15	1.85
20	7.6	0	10	10	10	3～7	80	SQKS1HBN4F20	2.0
20	7.6	0	10	10		3～7	120	SQKS1HBE4F20	2.0
20	7.6	0	10	10	10	3～7	120	SQKS1HBV4F20	2.0
25	12	0	10	10	10	3～7	80	SQKS1HBN4F25	2.9
25	12	0	10	10		3～7	120	SQKS1HBE4F25	2.9
25	12	0	10	10	10	3～7	120	SQKS1HBV4F25	2.9
32	24	0	10	10	10	3～7	80	SQKS1HBN4F32	4.4
32	24	0	10	10		3～7	120	SQKS1HBE4F32	4.4
32	24	0	10	10	10	3～7	120	SQKS1HBV4F32	4.4
40	29	0	10	10	10	3～7	80	SQKS1HBN4F40	5.4
40	29	0	10	10		3～7	120	SQKS1HBE4F40	5.4
40	29	0	10	10	10	3～7	120	SQKS1HBV4F40	5.4
50	48	0	10	10	10	3～7	80	SQKS1HBN4F50	7.6
50	48	0	10	10		3～7	120	SQKS1HBE4F50	7.6
50	48	0	10	10	10	3～7	120	SQKS1HBV4F50	7.6

Extemal Dimension Chart (Flange)

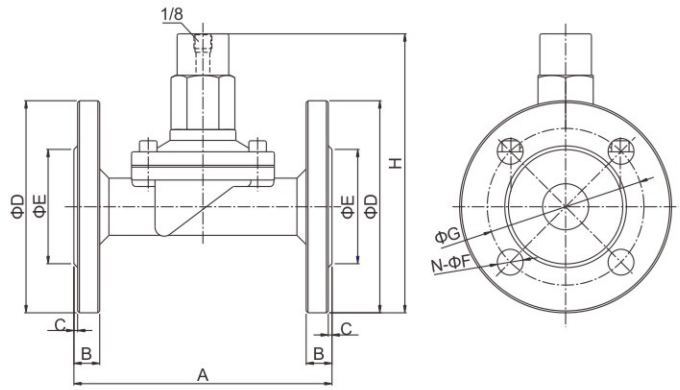

Model	A	B	C	D	E	N	F	G	H
SQKS-15BF	106	12	2	95	45	4	14	65	136
SQKS-20BF	106	12	2	102	56	4	14	75	139
SQKS-25BF	140	14	2	115	62	4	14	85	158
SQKS-32BF	152	15	2	135	76	4	18	100	195
SQKS-40BF	152	15	2	145	84	4	18	110	195
SQKS-50BF	195	16	2	160	98	4	18	125	200



SQKS plastic series 2/2-way direct acting air operated valve <normally closed >

1. 2/2-way normally closed air operated valve, use air operate to replace solenoid drive to operated the valve open and closed
2. Ambient temperature：0℃~65℃；
3. Control pressure ： 3～7kgf/cm^2；
4. Working pressure ： 0～8kgf/cm^2；
5. Body material ： PA6
6. Seal material ： NBR、VITON、EPDM and so on
7. Flow as the arrow, best position is the air operated upright direction.



External Dimensions

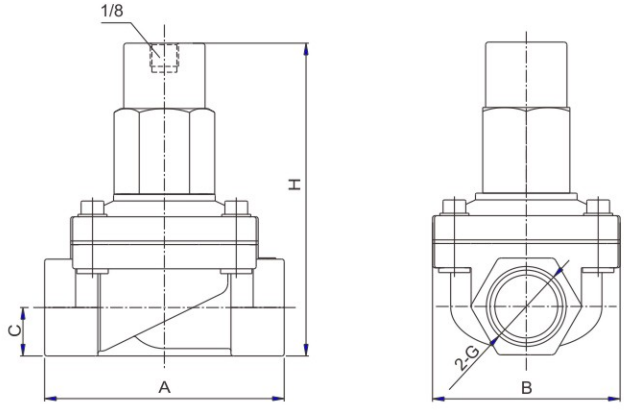

Orifice (mm)	G	A	B	C	H
15	1/2	69	57	15.5	106
20	3/4	73	57	17	114
25	1	99	77	21	121

Valve Selection List

Pipe Conn -ection	Orifice mm	CV Factor	Operating pressure differential (kgf/cm^2) Min.	Max. Air Gas	Max. Water Liquids	Max. Light oil ≤20CST	Min control pressure (kgf/cm^2)	Max. fluids Temp. ℃	Model Code	Weight Kg
1/2"	15	4.8	0	8	8	8	3～7	80	SQKS1HDN7D15	0.4
	15	4.8	0	8	8		3～7	80	SQKS1HDE7D15	0.4
	15	4.8	0	8	8	8	3～7	80	SQKS1HDV7D15	0.4
3/4"	20	7.6	0	8	8	8	3～7	80	SQKS1HDN7E20	0.5
	20	7.6	0	8	8		3～7	80	SQKS1HDE7E20	0.5
	20	7.6	0	8	8	8	3～7	80	SQKS1HDV7E20	0.5
1"	25	12	0	8	8	8	3～7	80	SQKS1HDN7G25	0.6
	25	12	0	8	8		3～7	80	SQKS1HDE7G25	0.6
	25	12	0	8	8	8	3～7	80	SQKS1HDV7G25	0.6

SQKS 2/2-way direct acting flange connection air operated valve · normally open

1. 2/2-way normally open air operated valve, use air operate to replace solenoid drive to operated the valve open and closed
2. Ambient temperature：0℃~65℃；
3. Control pressure： 3～7kgf/cm^2；
4. Working pressure： 0～10kgf/cm^2；
5. Body material： Brass, Stainless steel；
6. Seal material： NBR、VITON、EPDM and so on
7. Flow as the arrow, best position is the air operated upright direction.







External Dimensions

DN4.0

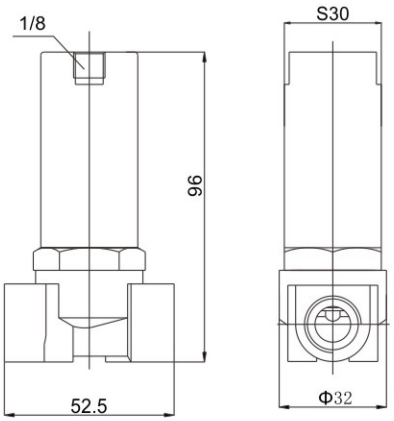

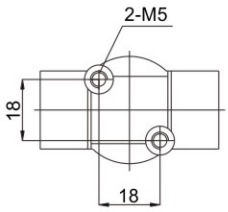

DN16 ~ 50

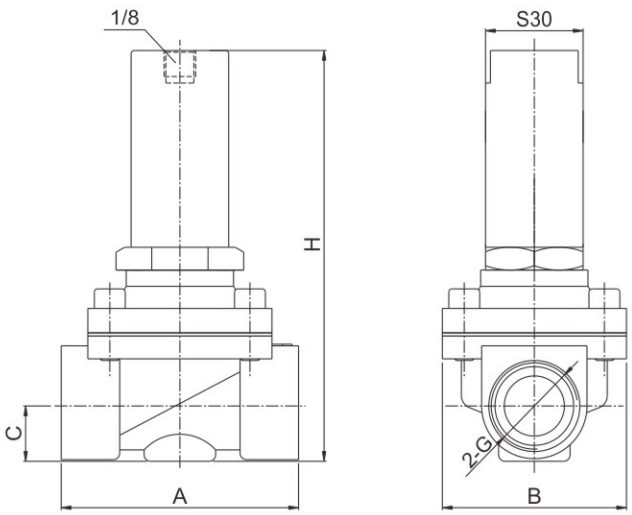

Orifice (mm)	G	A	B	C	H
16	3/8	69	57	14.5	104
	1/2	69	57	14.5	104
20	3/4	73	57	17	111
	1	80	62	20	114
25	1	99	77	21	120
32	1-1/4	112	86.5	24	128
	1-1/2	120	86.5	28	138
40	1-1/2	123	94	28	138
	2	130	94	35	153
50	2	165	120	35	154

SQKS 2/2-way direct acting air operated valve · normally open

Valve Selection List

Pipe Conn -ection	Orifice mm	CV Factor	Operating pressure differential (kgf/cm²)				Min control pressure (kgf/cm²)	Max. fluids Temp. ℃	Model Code		Weight Kg
			Min.	Max.					Forged Brass	Stainless Steel	
				Air Gas	Water Liquids	Light oil ≤20CST					
1/4"	4	0.6	0	10	10	10	3～7	80	SQKS2HDN1B04	————	0.5
	4	0.6	0	10	10		3～7	120	SQKS2HDE1B04	————	0.5
	4	0.6	0	10	10	10	3～7	120	SQKS2HDV1B04	————	0.5
3/8"	4	0.6	0	10	10	10	3～7	80	SQKS2HDN1C04	SQKS2HDN4C04	0.48
	4	0.6	0	10	10		3～7	120	SQKS2HDE1C04	SQKS2HDE4C04	0.48
	4	0.6	0	10	10	10	3～7	120	SQKS2HDV1C04	SQKS2HDV4C04	0.48
3/8"	16	4.8	0	10	10	10	3～7	80	SQKS2HDN1C16	SQKS2HBN4C16	0.82
	16	4.8	0	10	10		3～7	120	SQKS2HDE1C16	SQKS2HBE4C16	0.82
	16	4.8	0	10	10	10	3～7	120	SQKS2HDV1C16	SQKS2HBV4C16	0.82
1/2"	16	4.8	0	10	10	10	3～7	80	SQKS2HDN1D16	SQKS2HBN4D16	0.82
	16	4.8	0	10	10		3～7	120	SQKS2HDE1D16	SQKS2HBE4D16	0.82
	16	4.8	0	10	10	10	3～7	120	SQKS2HDV1D16	SQKS2HBV4D16	0.82
3/4"	20	7.6	0	10	10	10	3～7	80	SQKS2HDN1E20	SQKS2HBN4E20	0.92
	20	7.6	0	10	10		3～7	120	SQKS2HDE1E20	SQKS2HBE4E20	0.92
	20	7.6	0	10	10	10	3～7	120	SQKS2HDV1E20	SQKS2HBV4E20	0.92
1"	20	7.6	0	10	10	10	3～7	80	SQKS2HDN1G20	SQKS2HBN4G20	1.05
	20	7.6	0	10	10		3～7	120	SQKS2HDE1G20	SQKS2HBE4G20	1.05
	20	7.6	0	10	10	10	3～7	120	SQKS2HDV1G20	SQKS2HBV4G20	1.05
	25	12	0	10	10	10	3～7	80	SQKS2HDN1G25	SQKS2HBN4G25	1.47
	25	12	0	10	10		3～7	120	SQKS2HDE1G25	SQKS2HBE4G25	1.47
	25	12	0	10	10	10	3～7	120	SQKS2HDV1G25	SQKS2HBV4G25	1.47
11/4"	32	24	0	10	10	10	3～7	80	SQKS2HDN1H32	SQKS2HBN4H32	1.76
	32	24	0	10	10		3～7	120	SQKS2HDE1H32	SQKS2HBE4H32	1.76
	32	24	0	10	10	10	3～7	120	SQKS2HDV1H32	SQKS2HBV4H32	1.76
11/2"	32	24	0	10	10	10	3～7	80	SQKS2HDN1J32	SQKS2HBN4J32	2.1
	32	24	0	10	10		3～7	120	SQKS2HDE1J32	SQKS2HBE4J32	2.1
	32	24	0	10	10	10	3～7	120	SQKS2HDV1J32	SQKS2HBV4J32	2.1
	40	29	0	10	10	10	3～7	80	SQKS2HDN1J40	SQKS2HBN4J40	2.16
	40	29	0	10	10		3～7	120	SQKS2HDE1J40	SQKS2HBE4J40	2.16
	40	29	0	10	10	10	3～7	120	SQKS2HDV1J40	SQKS2HBV4J40	2.16
2"	40	29	0	10	10	10	3～7	80	SQKS2HDN1K40	SQKS2HBN4K40	2.6
	40	29	0	10	10		3～7	120	SQKS2HDE1K40	SQKS2HBE4K40	2.6
	40	29	0	10	10	10	3～7	120	SQKS2HDV1K40	SQKS2HBV4K40	2.6
	50	48	0	10	10	10	3～7	80	SQKS2HDN1K50	SQKS2HBN4K50	4.16
	50	48	0	10	10		3～7	120	SQKS2HDE1K50	SQKS2HBE4K50	4.16
	50	48	0	10	10	10	3～7	120	SQKS2HDV1K50	SQKS2HBV4K50	4.16

SQKS 2/2-way direct acting flange connection air operated valve · normally open

Valve Selection List (Flange connection)

Orifice mm	Orifice mm	Operating pressure differential (kgf/cm²) Min.	Max. Air Gas	Max. Water Liquids	Max. Light oil ≤20CST	Min control pressure (kgf/cm²)	Max. fluids Temp. ℃	Model Code	Weight Kg
15	4.8	0	10	10	10	3 ~ 7	80	SQKS2HBN4F15	1.85
15	4.8	0	10	10		3 ~ 7	120	SQKS2HBE4F15	1.85
15	4.8	0	10	10	10	3 ~ 7	120	SQKS2HBV4F15	1.85
20	7.6	0	10	10	10	3 ~ 7	80	SQKS2HBN4F20	2.0
20	7.6	0	10	10		3 ~ 7	120	SQKS2HBE4F20	2.0
20	7.6	0	10	10	10	3 ~ 7	120	SQKS2HBV4F20	2.0
25	12	0	10	10	10	3 ~ 7	80	SQKS2HBN4F25	2.9
25	12	0	10	10		3 ~ 7	120	SQKS2HBE4F25	2.9
25	12	0	10	10	10	3 ~ 7	120	SQKS2HBV4F25	2.9
32	24	0	10	10	10	3 ~ 7	80	SQKS2HBN4F32	4.4
32	24	0	10	10		3 ~ 7	120	SQKS2HBE4F32	4.4
32	24	0	10	10	10	3 ~ 7	120	SQKS2HBV4F32	4.4
40	29	0	10	10	10	3 ~ 7	80	SQKS2HBN4F40	5.4
40	29	0	10	10		3 ~ 7	120	SQKS2HBE4F40	5.4
40	29	0	10	10	10	3 ~ 7	120	SQKS2HBV4F40	5.4
50	48	0	10	10	10	3 ~ 7	80	SQKS2HBN4F50	7.6
50	48	0	10	10		3 ~ 7	120	SQKS2HBE4F50	7.6
50	48	0	10	10	10	3 ~ 7	120	SQKS2HBV4F50	7.6

Flange series External Dimensions

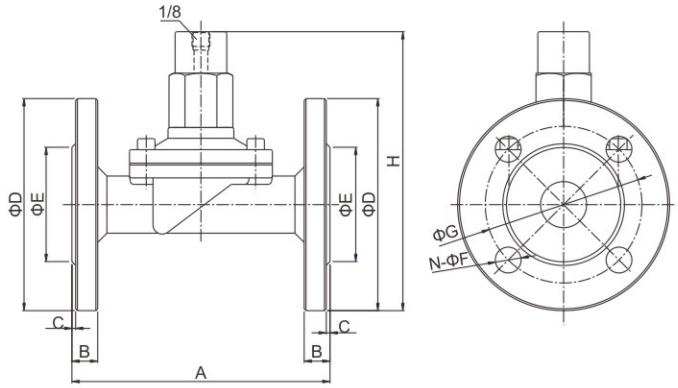

Orifice (mm)	A	B	C	D	E	N	F	G	H
DN15	106	12	2	95	45	4	14	65	150
DN20	106	12	2	102	56	4	14	75	153
DN25	140	14	2	115	62	4	14	85	168
DN32	152	15	2	135	76	4	18	100	187
DN40	152	15	2	145	84	4	18	110	192
Dn50	195	16	2	160	98	4	18	125	207

SQKS plastic series 2/2-way direct acting air operated valve · normally open

1. 2/2-way normally open air operated valve, use air operate to replace solenoid drive to operated the valve open and closed
2. Ambient temperature：0℃~65℃；
3. Control pressure： 3～7kgf/cm^2；
4. Working pressure： 0～8kgf/cm^2；
5. Body material： PA6
6. Seal material： NBR、VITON、EPDM and so on
7. Flow as the arrow, best position is the air operated upright direction.



External Dimensions

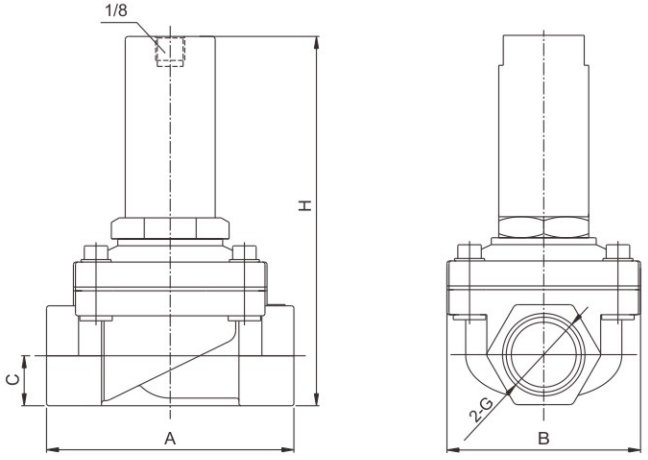

Orifice (mm)	G	A	B	C	H
15	1/2	69	57	15.5	121
20	3/4	73	57	17	129
25	1	99	77	21	136

Valve Selection List

Pipe Conn -ection	Orifice mm	CV Factor	Operating pressure differential (kgf/cm^2) Min.	Max. Air Gas	Max. Water Liquids	Max. Light oil ≤20CST	Min control pressure (kgf/cm^2)	Max. fluids Temp. ℃	Model Code	Weight Kg
1/2"	15	4.8	0	8	8	8	3～7	80	SQKS2HDN7D15	0.45
	15	4.8	0	8	8		3～7	80	SQKS2HDE7D15	0.45
	15	4.8	0	8	8	8	3～7	80	SQKS2HDV7D15	0.45
3/4"	20	7.6	0	8	8	8	3～7	80	SQKS2HDN7E20	0.55
	20	7.6	0	8	8		3～7	80	SQKS2HDE7E20	0.55
	20	7.6	0	8	8	8	3～7	80	SQKS2HDV7E20	0.55
1"	25	12	0	8	8	8	3～7	80	SQKS2HDN7G25	0.65
	25	12	0	8	8		3～7	80	SQKS2HDE7G25	0.65
	25	12	0	8	8	8	3～7	80	SQKS2HDV7G25	0.65

SQKP small series 2/2-way direct acting air operated valve · normally closed

1. 2/2-way small series normally closed air control valve, use air operate to replace solenoid drive to operated the valve open and closed
2. Ambient temperature：0℃~65℃；
3. Control pressure： 3～7kgf/cm^2；
4. Working pressure： 0～10kgf/cm^2；
5. Body material： Brass, Stainless steel；
6. Seal material： NBR、VITON、EPDM and so on
7. Flow as the arrow, best position is the air operated upright direction.



Air Operated Valves Model Numbering System for Order

1	2	3	4	5	6	7	8	9
Valve Series	Mode of Operation	Air operated type	Air operated material	Seal material	Body material	Pipe size	Orifice (mm)	Options
SQKP	**1**	**H**	**D**	**N**	**1**	**D**	**06**	□
SQKP	1:Normally Closed 2:Normally Open	H= piston type	D=Brass B=Stainless steel	N=NBR V=VITON E=EPDM	1=Brass 3=SS316 4=SS304 7=Plastic	A=1/8" B=1/4 " C=3/8 " D=1/2 "	03=3.0 04=4.0 05=5.0 06=6.0	N=NPT

External Dimensions

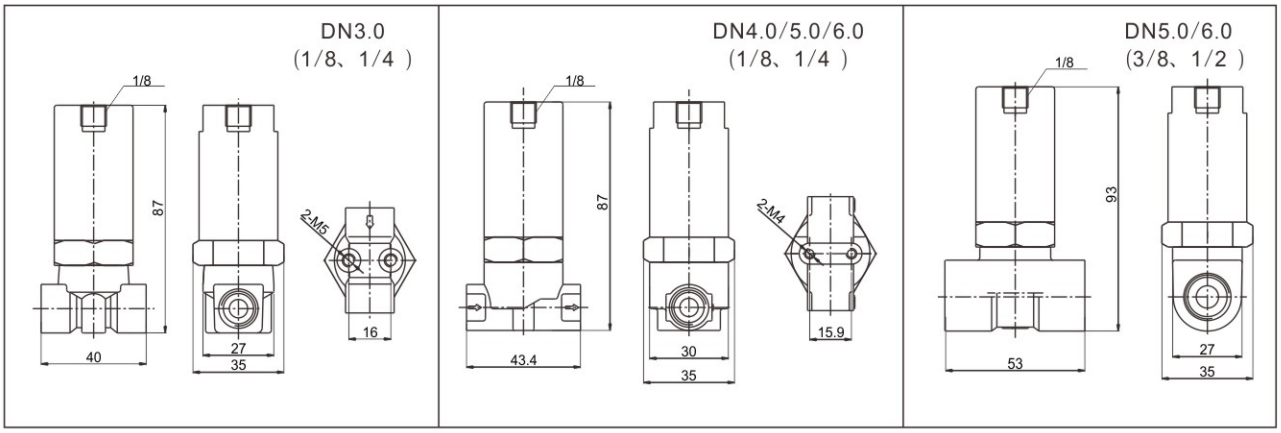

SQKP small series 2/2-way direct acting air operated valve · normally closed

Valve Selection List

Pipe Conn -ection	Orifice mm	CV Factor	Operating pressure differential (kgf/cm²) Min.	Max. Air Gas	Max. Water Liquids	Max. Light oil ≤20CST	Min control pressure (kgf/cm²)	Max. fluids Temp. ℃	Model Code Forged Brass	Model Code Stainless Steel	Weight Kg
1/8"	3	0.25	0	10	10	10	3 ~ 7	80	SQKP1HDN1A03	SQKP1HBN3A03	0.41
	3	0.25	0	10	10		3 ~ 7	120	SQKP1HDE1A03	SQKP1HBE3A03	0.41
	3	0.25	0	10	10	10	3 ~ 7	120	SQKP1HDV1A03	SQKP1HBV3A03	0.41
	4	0.4	0	10	10	10	3 ~ 7	80	SQKP1HDN1A04	SQKP1HBN3A04	0.41
	4	0.4	0	10	10		3 ~ 7	120	SQKP1HDE1A04	SQKP1HBE3A04	0.41
	4	0.4	0	10	10	10	3 ~ 7	120	SQKP1HDV1A04	SQKP1HBV3A04	0.41
	5	0.65	0	10	10	10	3 ~ 7	80	SQKP1HDN1A05	SQKP1HBN3A05	0.41
	5	0.65	0	10	10		3 ~ 7	120	SQKP1HDE1A05	SQKP1HBE3A05	0.41
	5	0.65	0	10	10	10	3 ~ 7	120	SQKP1HDV1A05	SQKP1HBV3A05	0.41
	6	0.8	0	10	10	10	3 ~ 7	80	SQKP1HDN1A06	SQKP1HBN3A06	0.41
	6	0.8	0	10	10		3 ~ 7	120	SQKP1HDE1A06	SQKP1HBE3A06	0.41
	6	0.8	0	10	10	10	3 ~ 7	120	SQKP1HDV1A06	SQKP1HBV3A06	0.41
1/4"	3	0.25	0	10	10	10	3 ~ 7	80	SQKP1HDN1B03	SQKP1HBN3B03	0.4
	3	0.25	0	10	10		3 ~ 7	120	SQKP1HDE1B03	SQKP1HBE3B03	0.4
	3	0.25	0	10	10	10	3 ~ 7	120	SQKP1HDV1B03	SQKP1HBV3B03	0.4
	4	0.4	0	10	10	10	3 ~ 7	80	SQKP1HDN1B04	SQKP1HBN3B04	0.4
	4	0.4	0	10	10		3 ~ 7	120	SQKP1HDE1B04	SQKP1HBE3B04	0.4
	4	0.4	0	10	10	10	3 ~ 7	120	SQKP1HDV1B04	SQKP1HBV3B04	0.4
	5	0.65	0	10	10	10	3 ~ 7	80	SQKP1HDN1B05	SQKP1HBN3B05	0.4
	5	0.65	0	10	10		3 ~ 7	120	SQKP1HDE1B05	SQKP1HBE3B05	0.4
	5	0.65	0	10	10	10	3 ~ 7	120	SQKP1HDV1B05	SQKP1HBV3B05	0.4
	6	0.8	0	10	10	10	3 ~ 7	80	SQKP1HDN1B06	SQKP1HBN3B06	0.4
	6	0.8	0	10	10		3 ~ 7	120	SQKP1HDE1B06	SQKP1HBE3B06	0.4
	6	0.8	0	10	10	10	3 ~ 7	120	SQKP1HDV1B06	SQKP1HBV3B06	0.4
3/8"	5	0.65	0	10	10	10	3 ~ 7	80	SQKP1HDN1C05	SQKP1HBN4C05	0.52
	5	0.65	0	10	10		3 ~ 7	120	SQKP1HDE1C05	SQKP1HBE4C05	0.52
	5	0.65	0	10	10	10	3 ~ 7	120	SQKP1HDV1C05	SQKP1HBV4C05	0.52
	6	0.8	0	10	10	10	3 ~ 7	80	SQKP1HDN1C06	SQKP1HBN4C06	0.52
	6	0.8	0	10	10		3 ~ 7	120	SQKP1HDE1C06	SQKP1HBE4C06	0.52
	6	0.8	0	10	10	10	3 ~ 7	120	SQKP1HDV1C06	SQKP1HBV4C06	0.52
1/2"	5	0.65	0	10	10	10	3 ~ 7	80	SQKP1HDN1D05	SQKP1HBN4D05	0.49
	5	0.65	0	10	10		3 ~ 7	120	SQKP1HDE1D05	SQKP1HBE4D05	0.49
	5	0.65	0	10	10	10	3 ~ 7	120	SQKP1HDV1D05	SQKP1HBV4D05	0.49
	6	0.8	0	10	10	10	3 ~ 7	80	SQKP1HDN1D06	SQKP1HBN4D06	0.49
	6	0.8	0	10	10		3 ~ 7	120	SQKP1HDE1D06	SQKP1HBE4D06	0.49
	6	0.8	0	10	10	10	3 ~ 7	120	SQKP1HDV1D06	SQKP1HBV4D06	0.49

SQKP 2/2-way large diameter pilot operated air operated valve · normally closed

1. 2/2-way normally closed air operated valve, use air operate to replace solenoid drive to operated the valve open and closed
2. Ambient temperature：0℃~65℃；
3. Control pressure：3～7kgf/cm^2；
4. Working pressure：0.5～13kgf/cm^2；
5. Body material：Brass, Stainless steel；
6. Seal material：NBR、VITON、EPDM and so on
7. Flow as the arrow, best position is the air operated upright direction.



Air Operated Valves Model Numbering System for Order

1	2	3	4	5	6	7	8	9
Valve Series	Mode of Operation	Air operated type	Air operated material	Seal material	Body material	Pipe size	Orifice (mm)	Options
SQKP	**1**	**H**	**D**	**N**	**1**	**D**	**16**	□
SQKP	1:Normally Closed 2:Normally Open	H=piston type	D=Brass B=Stainless steel	N=NBR V=VITON E=EPDM	1=Brass 3=SS316 7=Plastic	C=3/8 " D=1/2 "	13=13.0	N=NPT Y=Signal feedback
						E=3/4 "	20=20.0	
						G=1 "	20=20.0 25=25.0	
						H=1 1/4 "	32=32.0 35=35.0	
						J=1 1/2 "	40=40.0	
						K=2"	40=40.0 50=50.0	
						F=Flange connection	25=25.0 35=35.0 40=40.0 50=50.0 65=65.0 80=80.0 100=100.0	

External Dimensions

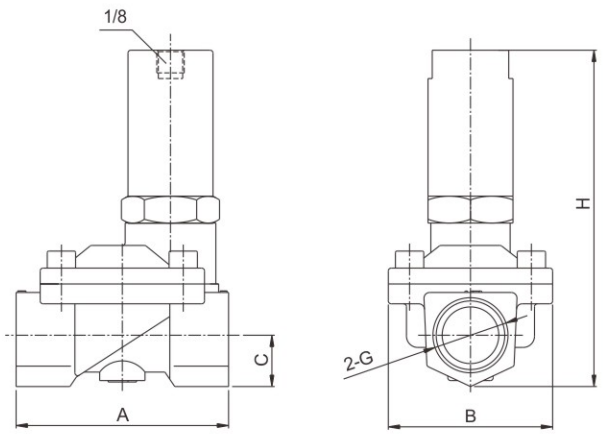

Orifice(mm)	G	A	B	C	H
13	3/8	66	48	15.3	114
13	1/2	66	48	15.3	114
20	3/4	75	58	18.1	120
	1	81	58	20	127
25	1	96	70	24.8	133
35	1-1/4	131	96	33.3	152
40	1-1/2	131	96	33.3	152
	2	136	96	35	158
50	2	165	120	35	164

SQKP 2/2-way large diameter pilot operated air operated valve · normally closed

Valve Selection List

Pipe Conn -ection	Orifice mm	CV Factor	Operating pressure differential (kgf/cm²)				Min control pressure (kgf/cm²)	Max. fluids Temp. ℃	Model Code		Weight Kg
			Min.	Max.					Forged Brass	Stainless Steel	
				Air Gas	Water Liquids	Light oil ≤20CST					
3/8"	13	4.5	0.5	13	13	13	3 ~ 7	80	SQKP1HDN1C13	SQKP1HBN3C13	0.8
	13	4.5	0.5	13	13		3 ~ 7	120	SQKP1HDE1C13	SQKP1HBE3C13	0.8
	13	4.5	0.5	13	13	13	3 ~ 7	120	SQKP1HDV1C13	SQKP1HBV3C13	0.8
1/2"	13	4.5	0.5	13	13	13	3 ~ 7	80	SQKP1HDN1D13	SQKP1HBN3D13	0.8
	13	4.5	0.5	13	13		3 ~ 7	120	SQKP1HDE1D13	SQKP1HBE3D13	0.8
	13	4.5	0.5	13	13	13	3 ~ 7	120	SQKP1HDV1D13	SQKP1HBV3D13	0.8
3/4"	20	7.6	0.5	13	13	13	3 ~ 7	80	SQKP1HDN1E20	SQKP1HBN3E20	0.9
	20	7.6	0.5	13	13		3 ~ 7	120	SQKP1HDE1E20	SQKP1HBE3E20	0.9
	20	7.6	0.5	13	13	13	3 ~ 7	120	SQKP1HDV1E20	SQKP1HBV3E20	0.9
1	20	7.6	0.5	13	13	13	3 ~ 7	80	SQKP1HDN1G20	SQKP1HBN3G20	1.1
	20	7.6	0.5	13	13		3 ~ 7	120	SQKP1HDE1G20	SQKP1HBE3G20	1.1
	20	7.6	0.5	13	13	13	3 ~ 7	120	SQKP1HDV1G20	SQKP1HBV3G20	1.1
	25	12	0.5	13	13	13	3 ~ 7	80	SQKP1HDN1G25	SQKP1HBN3G25	1.4
	25	12	0.5	13	13		3 ~ 7	120	SQKP1HDE1G25	SQKP1HBE3G25	1.4
	25	12	0.5	13	13	13	3 ~ 7	120	SQKP1HDV1G25	SQKP1HBV3G25	1.4
1-1/4"	35	22	0.5	13	13	13	3 ~ 7	80	SQKP1HDN1H35	SQKP1HBN3H35	2.8
	35	22	0.5	13	13		3 ~ 7	120	SQKP1HDE1H35	SQKP1HBE3H35	2.8
	35	22	0.5	13	13	13	3 ~ 7	120	SQKP1HDV1H35	SQKP1HBV3H35	2.8
1-1/2"	40	30	0.5	13	13	13	3 ~ 7	80	SQKP1HDN1J40	SQKP1HBN3J40	2.7
	40	30	0.5	13	13		3 ~ 7	120	SQKP1HDE1J40	SQKP1HBE3J40	2.7
	40	30	0.5	13	13	13	3 ~ 7	120	SQKP1HDV1J40	SQKP1HBV3J40	2.7
2	40	30	0.5	13	13	13	3 ~ 7	80	SQKP1HDN1K40	SQKP1HBN3K40	3.1
	40	30	0.5	13	13		3 ~ 7	120	SQKP1HDE1K40	SQKP1HBE3K40	3.1
	40	30	0.5	3	13	13	3 ~ 7	120	SQKP1HDV1K40	SQKP1HBV3K40	3.1
	50	48	0.5	13	13	13	3 ~ 7	80	SQKP1HDN1K50	SQKP1HBN3K50	4.0
	50	48	0.5	13	13		3 ~ 7	120	SQKP1HDE1K50	SQKP1HBE3K50	4.0
	50	48	0.5	13	13	13	3 ~ 7	120	SQKP1HDV1K50	SQKP1HBV3K50	4.0

SQKP 2/2-way pilot operated flange connection air operated valve · normally closed

Valve Selection List (Flange connection)

Orifice mm	CV Factor	Operating pressure differential (kgf/cm²) Min.	Max. Air Gas	Max. Water Liquids	Max. Light oil ≤20CST	Min control pressure (kgf/cm²)	Max. fluids Temp. ℃	Model Code	Weight Kg
25	12	0.5	13	13	13	3～7	80	SQKP1HBN3F25	2.7
25	12	0.5	13	13		3～7	120	SQKP1HBE3F25	2.7
25	12	0.5	13	13	13	3～7	120	SQKP1HBV3F25	2.7
35	22	0.5	13	13	13	3～7	80	SQKP1HBN3F35	5
35	22	0.5	13	13		3～7	120	SQKP1HBE3F35	5
35	22	0.5	13	13	13	3～7	120	SQKP1HBV3F35	5
40	30	0.5	13	13	13	3～7	80	SQKP1HBN3F40	5.3
40	30	0.5	13	13		3～7	120	SQKP1HBE3F40	5.3
40	30	0.5	13	13	13	3～7	120	SQKP1HBV3F40	5.3
50	48	0.5	13	13	13	3～7	80	SQKP1HBN3F50	7.9
50	48	0.5	13	13		3～7	120	SQKP1HBE3F50	7.9
50	48	0.5	13	13	13	3～7	120	SQKP1HBV3F50	7.9
65	52	1	10	10	10	3～7	80	SQKP1HBN4F65	13.5
65	52	1	10	10		3～7	120	SQKP1HBE4F65	13.5
65	52	1	10	10	10	3～7	120	SQKP1HBV4F65	13.5
80	80	1	10	10	10	3～7	80	SQKP1HBN4F80	15.6
80	80	1	10	10		3～7	120	SQKP1HBE4F80	15.6
80	80	1	10	10	10	3～7	120	SQKP1HBV4F80	15.6
100	128	1	10	10	10	3～7	80	SQKP1HBN4F100	22
100	128	1	10	10		3～7	120	SQKP1HBE4F100	22
100	128	1	10	10	10	3～7	120	SQKP1HBV4F100	22

External Dimensions

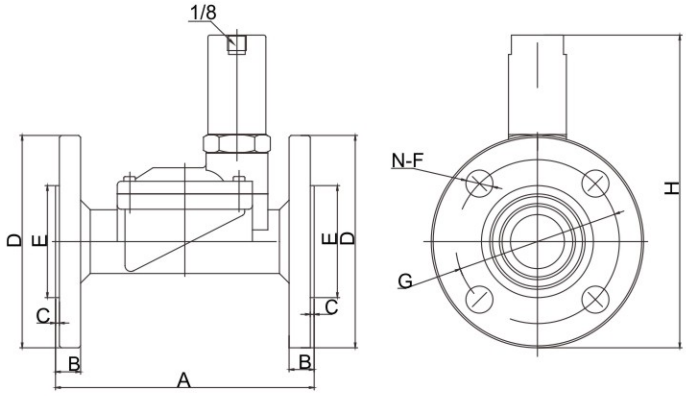



型 号	A	B	C	ΦD	ΦE	N-ΦF	ΦG	H
DN25	134	13	2	110	58	4-14	85	167
DN32	160	15	2	135	74	4-18	100	182
DN40	160	15	2	145	84	4-18	110	187
DN50	200	16	2	160	88	4-18	125	209
DN65	250	19	3	185	118	4-18	145	257
DN80	270	19	3	202	134	4-18	160	269
DN100	342	21	3	222	162	8-18	180	294

SQKP plastic series 2/2-way pilot operate air operated valve · normally closed

1. 2/2-way normally closed air operated valve, use air operate to replace solenoid drive to operated the valve open and closed
2. Ambient temperature：0℃~65℃；
3. Control pressure： 3～7kgf/cm^2；
4. Working pressure： 0.5-10kgf/cm^2；
5. Body material： PA6
6. Seal material： NBR、VITON、EPDM and so on
7. Flow as the arrow, best position is the air operated upright direction.



Valve Selection List

Pipe Conn -ection	Orifice mm	CV Factor	Operating pressure differential (kgf/cm^2)				Min control pressure (kgf/cm^2)	Max. fluids Temp. ℃	External Dimensions L × W × H	Model Code	Weight Kg
			Min.	Max.							
				Air Gas	Water Liquids	Light oil ≤20CST					
3/8"	13	4.5	0.5	10	10	10	3 ~ 7	80	76×52×118	SQKP1HDN7C13	0.38
	13	4.5	0.5	10	10		3 ~ 7	80	76×52×118	SQKP1HDE7C13	0.38
	13	4.5	0.5	10	10	10	3 ~ 7	80	76×52×118	SQKP1HDV7C13	0.38
1/2"	13	4.5	0.5	10	10	10	3 ~ 7	80	76×52×118	SQKP1HDN7D13	0.37
	13	4.5	0.5	10	10		3 ~ 7	80	76×52×118	SQKP1HDE7D13	0.37
	13	4.5	0.5	10	10	10	3 ~ 7	80	76×52×118	SQKP1HDV7D13	0.37
3/4"	20	7.6	0.5	10	10	10	3 ~ 7	80	90×71×122	SQKP1HDN7E20	0.43
	20	7.6	0.5	10	10		3 ~ 7	80	90×71×122	SQKP1HDE7E20	0.43
	20	7.6	0.5	10	10	10	3 ~ 7	80	90×71×122	SQKP1HDV7E20	0.43
1	25	12	0.5	10	10	10	3 ~ 7	80	111×91×129	SQKP1HDN7G25	0.49
	25	12	0.5	10	10		3 ~ 7	80	111×91×129	SQKP1HDE7G25	0.49
	25	12	0.5	10	10	10	3 ~ 7	80	111×91×129	SQKP1HDV7G25	0.49
1-1/4"	35	22	0.5	10	10	10	3 ~ 7	80	158×115×147	SQKP1HDN7H35	0.85
	35	22	0.5	10	10		3 ~ 7	80	158×115×147	SQKP1HDE7H35	0.85
	35	22	0.5	10	10	10	3 ~ 7	80	158×115×147	SQKP1HDV7H35	0.85
1-1/2"	40	30	0.5	10	10	10	3 ~ 7	80	158×115×147	SQKP1HDN7J40	0.78
	40	30	0.5	10	10		3 ~ 7	80	158×115×147	SQKP1HDE7J40	0.78
	40	30	0.5	10	10	10	3 ~ 7	80	158×115×147	SQKP1HDV7J40	0.78

SQKP small series 2/2-way direct acting air operated valve · normally open

Valve Selection List

Pipe Conn -ection	Orifice mm	CV Factor	Operating pressure differential (kgf/cm²) Min.	Max. Air Gas	Max. Water Liquids	Max. Light oil ≤20CST	Min control pressure (kgf/cm²)	Max. fluids Temp. ℃	External Dimensions L × W × H	Model Code Forged Brass	Model Code Stainless Steel	Weight Kg
1/8"	3	0.25	0	10	10	10	3 ~ 7	80	40×35×95	SQKP2HDN1A03	SQKP2HBN3A03	0.41
	3	0.25	0	10	10		3 ~ 7	120	40×35×95	SQKP2HDE1A03	SQKP2HBE3A03	0.41
	3	0.25	0	10	10	10	3 ~ 7	120	40×35×95	SQKP2HDV1A03	SQKP2HBV3A03	0.41
	4	0.4	0	10	10	10	3 ~ 7	80	43.4×35×96	SQKP2HDN1A04	SQKP2HBN3A04	0.41
	4	0.4	0	10	10		3 ~ 7	120	43.4×35×96	SQKP2HDE1A04	SQKP2HBE3A04	0.41
	4	0.4	0	10	10	10	3 ~ 7	120	43.4×35×96	SQKP2HDV1A04	SQKP2HBV3A04	0.41
	5	0.65	0	10	10	10	3 ~ 7	80	43.4×35×96	SQKP2HDN1A05	SQKP2HBN3A05	0.41
	5	0.65	0	10	10		3 ~ 7	120	43.4×35×96	SQKP2HDE1A05	SQKP2HBE3A05	0.41
	5	0.65	0	10	10	10	3 ~ 7	120	43.4×35×96	SQKP2HDV1A05	SQKP2HBV3A05	0.41
	6	0.8	0	10	10	10	3 ~ 7	80	43.4×35×96	SQKP2HDN1A06	SQKP2HBN3A06	0.41
	6	0.8	0	10	10		3 ~ 7	120	43.4×35×96	SQKP2HDE1A06	SQKP2HBE3A06	0.41
	6	0.8	0	10	10	10	3 ~ 7	120	43.4×35×96	SQKP2HDV1A06	SQKP2HBV3A06	0.41
1/4"	3	0.25	0	10	10	10	3 ~ 7	80	40×35×95	SQKP2HDN1B03	SQKP2HBN3B03	0.4
	3	0.25	0	10	10		3 ~ 7	120	40×35×95	SQKP2HDE1B03	SQKP2HBE3B03	0.4
	3	0.25	0	10	10	10	3 ~ 7	120	40×35×95	SQKP2HDV1B03	SQKP2HBV3B03	0.4
	4	0.4	0	10	10	10	3 ~ 7	80	43.4×35×96	SQKP2HDN1B04	SQKP2HBN3B04	0.4
	4	0.4	0	10	10		3 ~ 7	120	43.4×35×96	SQKP2HDE1B04	SQKP2HBE3B04	0.4
	4	0.4	0	10	10	10	3 ~ 7	120	43.4×35×96	SQKP2HDV1B04	SQKP2HBV3B04	0.4
	5	0.65	0	10	10	10	3 ~ 7	80	43.4×35×96	SQKP2HDN1B05	SQKP2HBN3B05	0.4
	5	0.65	0	10	10		3 ~ 7	120	43.4×35×96	SQKP2HDE1B05	SQKP2HBE3B05	0.4
	5	0.65	0	10	10	10	3 ~ 7	120	43.4×35×96	SQKP2HDV1B05	SQKP2HBV3B05	0.4
	6	0.8	0	10	10	10	3 ~ 7	80	43.4×35×96	SQKP2HDN1B06	SQKP2HBN3B06	0.4
	6	0.8	0	10	10		3 ~ 7	120	43.4×35×96	SQKP2HDE1B06	SQKP2HBE3B06	0.4
	6	0.8	0	10	10	10	3 ~ 7	120	43.4×35×96	SQKP2HDV1B06	SQKP2HBV3B06	0.4
3/8"	5	0.65	0	10	10	10	3 ~ 7	80	53×35×102	SQKP2HDN1C05	SQKP2HBN4C05	0.52
	5	0.65	0	10	10		3 ~ 7	120	53×35×102	SQKP2HDE1C05	SQKP2HBE4C05	0.52
	5	0.65	0	10	10	10	3 ~ 7	120	53×35×102	SQKP2HDV1C05	SQKP2HBV4C05	0.52
	6	0.8	0	10	10	10	3 ~ 7	80	53×35×102	SQKP2HDN1C06	SQKP2HBN4C06	0.52
	6	0.8	0	10	10		3 ~ 7	120	53×35×102	SQKP2HDE1C06	SQKP2HBE4C06	0.52
	6	0.8	0	10	10	10	3 ~ 7	120	53×35×102	SQKP2HDV1C06	SQKP2HBV4C06	0.52
1/2"	5	0.65	0	10	10	10	3 ~ 7	80	53×35×102	SQKP2HDN1D05	SQKP2HBN4D05	0.49
	5	0.65	0	10	10		3 ~ 7	120	53×35×102	SQKP2HDE1D05	SQKP2HBE4D05	0.49
	5	0.65	0	10	10	10	3 ~ 7	120	53×35×102	SQKP2HDV1D05	SQKP2HBV4D05	0.49
	6	0.8	0	10	10	10	3 ~ 7	80	53×35×102	SQKP2HDN1D06	SQKP2HBN4D06	0.49
	6	0.8	0	10	10		3 ~ 7	120	53×35×102	SQKP2HDE1D06	SQKP2HBE4D06	0.49
	6	0.8	0	10	10	10	3 ~ 7	120	53×35×102	SQKP2HDV1D06	SQKP2HBV4D06	0.49

SQKP 2/2-way large diameter pilot operated air operated valve · normally open

Valve Selection List

Pipe Conn -ection	Orifice mm	CV Factor	Operating pressure differential (kgf/cm²) Min.	Max. Air Gas	Max. Water Liquids	Max. Light oil ≤20CST	Min control pressure (kgf/cm²)	Max. fluids Temp. ℃	Model Code Forged Brass	Model Code Stainless Steel	Weight Kg
3/8"	13	4.5	0.5	13	13	13	3 ~ 7	80	SQKP2HDN1C13	SQKP2HBN3C13	0.85
	13	4.5	0.5	13	13		3 ~ 7	120	SQKP2HDE1C13	SQKP2HBE3C13	0.85
	13	4.5	0.5	13	13	13	3 ~ 7	120	SQKP2HDV1C13	SQKP2HBV3C13	0.85
1/2"	13	4.5	0.5	13	13	13	3 ~ 7	80	SQKP2HDN1D13	SQKP2HBN3D13	0.85
	13	4.5	0.5	13	13		3 ~ 7	120	SQKP2HDE1D13	SQKP2HBE3D13	0.85
	13	4.5	0.5	13	13	13	3 ~ 7	120	SQKP2HDV1D13	SQKP2HBV3D13	0.85
3/4"	20	7.6	0.5	13	13	13	3 ~ 7	80	SQKP2HDN1E20	SQKP2HBN3E20	0.95
	20	7.6	0.5	13	13		3 ~ 7	120	SQKP2HDE1E20	SQKP2HBE3E20	0.95
	20	7.6	0.5	13	13	13	3 ~ 7	120	SQKP2HDV1E20	SQKP2HBV3E20	0.95
1	20	7.6	0.5	13	13	13	3 ~ 7	80	SQKP2HDN1G20	SQKP2HBN3G20	1.2
	20	7.6	0.5	13	13		3 ~ 7	120	SQKP2HDE1G20	SQKP2HBE3G20	1.2
	20	7.6	0.5	13	13	13	3 ~ 7	120	SQKP2HDV1G20	SQKP2HBV3G20	1.2
	25	12	0.5	13	13	13	3 ~ 7	80	SQKP2HDN1G25	SQKP2HBN3G25	1.45
	25	12	0.5	13	13		3 ~ 7	120	SQKP2HDE1G25	SQKP2HBE3G25	1.45
	25	12	0.5	13	13	13	3 ~ 7	120	SQKP2HDV1G25	SQKP2HBV3G25	1.45
1-1/4"	35	22	0.5	13	13	13	3 ~ 7	80	SQKP2HDN1H35	SQKP2HBN3H35	2.85
	35	22	0.5	13	13		3 ~ 7	120	SQKP2HDE1H35	SQKP2HBE3H35	2.85
	35	22	0.5	13	13	13	3 ~ 7	120	SQKP2HDV1H35	SQKP2HBV3H35	2.85
1-1/2"	40	30	0.5	13	13	13	3 ~ 7	80	SQKP2HDN1J40	SQKP2HBN3J40	2.75
	40	30	0.5	13	13		3 ~ 7	120	SQKP2HDE1J40	SQKP2HBE3J40	2.75
	40	30	0.5	13	13	13	3 ~ 7	120	SQKP2HDV1J40	SQKP2HBV3J40	2.75
2	40	30	0.5	13	13	13	3 ~ 7	80	SQKP2HDN1K40	SQKP2HBN3K40	3.15
	40	30	0.5	13	13		3 ~ 7	120	SQKP2HDE1K40	SQKP2HBE3K40	3.15
	40	30	0.5	13	13	13	3 ~ 7	120	SQKP2HDV1K40	SQKP2HBV3K40	3.15
	50	48	0.5	13	13	13	3 ~ 7	80	SQKP2HDN1K50	SQKP2HBN3K50	4.1
	50	48	0.5	13	13		3 ~ 7	120	SQKP2HDE1K50	SQKP2HBE3K50	4.1
	50	48	0.5	13	13	13	3 ~ 7	120	SQKP2HDV1K50	SQKP2HBV3K50	4.1

External Dimensions

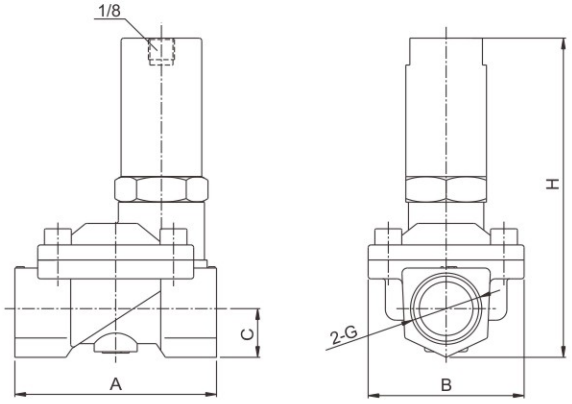

Orifice(mm)	G	A	B	C	H
13	3/8	66	48	15.3	123
	1/2	66	48	15.3	123
20	3/4	75	58	18.1	129
	1	81	58	20	136
25	1	96	70	24.8	142
32	1–1/4	131	96	33.3	161
40	1–1/2	131	96	33.3	161
	2	136	96	35	167
50	2	165	120	35	173

SQKP 2/2-way pilot operated flange connection air operated valve · normally open

Valve Selection List （Flange connection）

Orifice mm	CV Factor	Operating pressure differential (kgf/cm^2)				Min control pressure (kgf/cm^2)	Max. fluids Temp. ℃	Model Code	Weight Kg
		Min.	Max.						
			Air Gas	Water Liquids	Light oil ≤20CST				
25	12	0.5	13	13	13	3 ~ 7	80	SQKP2HBN3F25	2.8
25	12	0.5	13	13		3 ~ 7	120	SQKP2HBE3F25	2.8
25	12	0.5	13	13	13	3 ~ 7	120	SQKP2HBV3F25	2.8
35	22	0.5	13	13	13	3 ~ 7	80	SQKP2HBN3F35	5.1
35	22	0.5	13	13		3 ~ 7	120	SQKP2HBE3F35	5.1
35	22	0.5	13	13	13	3 ~ 7	120	SQKP2HBV3F35	5.1
40	30	0.5	13	13	13	3 ~ 7	80	SQKP2HBN3F40	5.4
40	30	0.5	13	13		3 ~ 7	120	SQKP2HBE3F40	5.4
40	30	0.5	13	13	13	3 ~ 7	120	SQKP2HBV3F40	5.4
50	48	0.5	13	13	13	3 ~ 7	80	SQKP2HBN3F50	8.0
50	48	0.5	13	13		3 ~ 7	120	SQKP2HBE3F50	8.0
50	48	0.5	13	13	13	3 ~ 7	120	SQKP2HBV3F50	8.0
65	52	1	10	10	10	3 ~ 7	80	SQKP2HBN4F65	13.6
65	52	1	10	10		3 ~ 7	120	SQKP2HBE4F65	13.6
65	52	1	10	10	10	3 ~ 7	120	SQKP2HBV4F65	13.6
80	80	1	10	10	10	3 ~ 7	80	SQKP2HBN4F80	15.7
80	80	1	10	10		3 ~ 7	120	SQKP2HBE4F80	15.7
80	80	1	10	10	10	3 ~ 7	120	SQKP2HBV4F80	15.7
100	128	1	10	10	10	3 ~ 7	80	SQKP2HBN4F100	22.1
100	128	1	10	10		3 ~ 7	120	SQKP2HBE4F100	22.1
100	128	1	10	10	10	3 ~ 7	120	SQKP2HBV4F100	22.1

External Dimensions

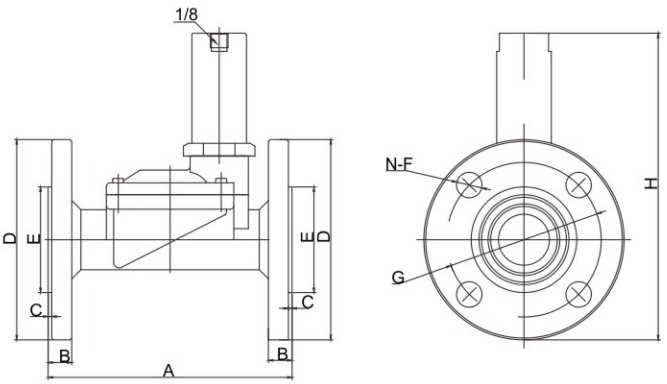

Model	A	B	C	ΦD	ΦE	N-ΦF	ΦG	H
DN25	134	13	2	110	58	4-14	85	174
DN32	160	15	2	135	74	4-18	100	189
DN40	160	15	2	145	84	4-18	110	194
DN50	200	16	2	160	88	4-18	125	216
DN65	250	19	3	185	118	4-18	145	264
DN80	270	19	3	202	134	4-18	160	276
DN100	342	21	3	222	162	8-18	180	301

SQKP plastic series 2/2-way pilot operate air operated valve · normally open

1. 2/2-way normally open air operated valve, use air operate to replace solenoid drive to operated the valve open and closed
2. Ambient temperature：0℃~65℃；
3. Control pressure ： 3～7kgf/cm^2；
4. Working pressure ： 0.5-10kgf/cm^2；
5. Body material ： PA6
6. Seal material ： NBR、VITON、EPDM and so on
7. Flow as the arrow, best position is the air operated upright direction.



Valve Selection List

Pipe Conn -ection	Orifice mm	CV Factor	Operating pressure differential (kgf/cm^2)				Min control pressure (kgf/cm^2)	Max. fluids Temp. ℃	External Dimensions L × W × H	Model Code	Weight Kg
			Min.	Max.							
				Air Gas	Water Liquids	Light oil ⩽20CST					
3/8"	13	4.5	0.5	10	10	10	3 ~ 7	80	76×52×127	SQKP2HDN7C13	0.4
	13	4.5	0.5	10	10		3 ~ 7	80	76×52×127	SQKP2HDE7C13	0.4
	13	4.5	0.5	10	10	10	3 ~ 7	80	76×52×127	SQKP2HDV7C13	0.4
1/2"	13	4.5	0.5	10	10	10	3 ~ 7	80	76×52×127	SQKP2HDN7D13	0.4
	13	4.5	0.5	10	10		3 ~ 7	80	76×52×127	SQKP2HDE7D13	0.4
	13	4.5	0.5	10	10	10	3 ~ 7	80	76×52×127	SQKP2HDV7D13	0.4
3/4"	20	7.6	0.5	10	10	10	3 ~ 7	80	90×71×131	SQKP2HDN7E20	0.45
	20	7.6	0.5	10	10		3 ~ 7	80	90×71×131	SQKP2HDE7E20	0.45
	20	7.6	0.5	10	10	10	3 ~ 7	80	90×71×131	SQKP2HDV7E20	0.45
1	25	12	0.5	10	10	10	3 ~ 7	80	111×91×138	SQKP2HDN7G25	0.52
	25	12	0.5	10	10		3 ~ 7	80	111×91×138	SQKP2HDE7G25	0.52
	25	12	0.5	10	10	10	3 ~ 7	80	111×91×138	SQKP2HDV7G25	0.52
1-1/4"	35	22	0.5	10	10	10	3 ~ 7	80	158×115×156	SQKP2HDN7H35	0.9
	35	22	0.5	10	10		3 ~ 7	80	158×115×156	SQKP2HDE7H35	0.9
	35	22	0.5	10	10	10	3 ~ 7	80	158×115×156	SQKP2HDV7H35	0.9
1-1/2"	40	30	0.5	10	10	10	3 ~ 7	80	158×115×156	SQKP2HDN7J40	0.85
	40	30	0.5	10	10		3 ~ 7	80	158×115×156	SQKP2HDE7J40	0.85
	40	30	0.5	10	10	10	3 ~ 7	80	158×115×156	SQKP2HDV7J40	0.85

SQKF 2/2-way large diameter direct acting vacuum air operated valve · normally closed

1. 2/2-way large diameter direct acting vacuum air operated valve used for vacuum system.use air operate to replace solenoid drive to operated the valve open and closed;
2. Ambient temperature: 0℃~65℃;
3. Control pressure : 3～7kgf/cm^2;
4. Working pressure : -1～10kgf/cm^2;
5. Body material : Brass, Stainless steel;
6. Seal material : NBR、VITON、EPDM and so on;
7. Flow as the arrow, best position is the air operated upright direction.



Vacuum air operated valve Model Numbering System for Order

1	2	3	4	5	6	7	8	9
Valve Series	Mode of Operation	Air operated type	Air operated material	Seal material	Body material	Pipe size	Orifice (mm)	Options
SQKF	**1**	**H**	**D**	**N**	**1**	**D**	**16**	□
SQKF	1:Normally Closed	H= piston type	D=Brass B=Stainless steel	N=NBR V=VITON E=EPDM	1=Brass 4=SS304 3=SS316	C=3/8 " D=1/2 " E=3/4 " G=1 " H=1 1/4" J=1 1/2" K=2"	16=16.0 20=20.0 20=20.0 25=25.0 32=32.0 32=32.0 40=40.0 40=40.0 50=50.0	N=NPT

External Dimensions

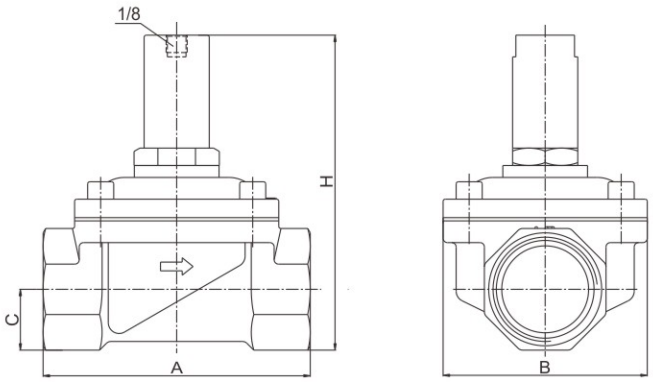

Orifice(mm)	G	A	B	C	H
16	3/8	69	57	14.5	111
16	1/2	69	57	14.5	111
20	3/4	73	57	17	118
	1	80	62	20	121
25	1	99	77	21	127
32	1-1/4	112	86.5	24	136
	1-1/2	120	86.5	28	146
40	1-1/2	123	94	28	146
	2	130	94	35	161
50	2	165	120	35	162

SQKF 2/2-way large diameter direct acting vacuum air operated valve · normally closed

Valve Selection List

Pipe Conn -ection	Orifice mm	CV Factor	Operating pressure differential (kgf/cm²)				Min control pressure (kgf/cm²)	Max. fluids Temp. ℃	Model Code		Weight Kg
			Min.	Max.							
				Air Gas	Water Liquids	Light oil ≤20CST			Forged Brass	Stainless Steel	
3/8"	16	4.8	-1	10	10	10	3 ~ 7	80	SQKF1HDN1C16	SQKF1HBN4C16	0.82
	16	4.8	-1	10	10		3 ~ 7	120	SQKF1HDE1C16	SQKF1HBE4C16	0.82
	16	4.8	-1	10	10	10	3 ~ 7	120	SQKF1HDV1C16	SQKF1HBV4C16	0.82
1/2"	16	4.8	-1	10	10	10	3 ~ 7	80	SQKF1HDN1D16	SQKF1HBN4D16	0.82
	16	4.8	-1	10	10		3 ~ 7	120	SQKF1HDE1D16	SQKF1HBE4D16	0.82
	16	4.8	-1	10	10	10	3 ~ 7	120	SQKF1HDV1D16	SQKF1HBV4D16	0.82
3/4"	20	7.6	-1	10	10	10	3 ~ 7	80	SQKF1HDN1E20	SQKF1HBN4E20	0.92
	20	7.6	-1	10	10		3 ~ 7	120	SQKF1HDE1E20	SQKF1HBE4E20	0.92
	20	7.6	-1	10	10	10	3 ~ 7	120	SQKF1HDV1E20	SQKF1HBV4E20	0.92
1	20	7.6	-1	10	10	10	3 ~ 7	80	SQKF1HDN1G20	SQKF1HBN4G20	1.1
	20	7.6	-1	10	10		3 ~ 7	120	SQKF1HDE1G20	SQKF1HBE4G20	1.1
	20	7.6	-1	10	10	10	3 ~ 7	120	SQKF1HDV1G20	SQKF1HBV4G20	1.1
	25	12	-1	10	10	10	3 ~ 7	80	SQKF1HDN1G25	SQKF1HBN4G25	1.47
	25	12	-1	10	10		3 ~ 7	120	SQKF1HDE1G25	SQKF1HBE4G25	1.47
	25	12	-1	10	10	10	3 ~ 7	120	SQKF1HDV1G25	SQKF1HBV4G25	1.47
1-1/4"	32	24	-1	10	10	10	3 ~ 7	80	SQKF1HDN1H32	SQKF1HBN4H32	1.73
	32	24	-1	10	10		3 ~ 7	120	SQKF1HDE1H32	SQKF1HBE4H32	1.73
	32	24	-1	10	10	10	3 ~ 7	120	SQKF1HDV1H32	SQKF1HBV4H32	1.73
1-1/2"	32	24	-1	10	10	10	3 ~ 7	80	SQKF1HDN1J32	SQKF1HBN4J32	2.0
	32	24	-1	10	10		3 ~ 7	120	SQKF1HDE1J32	SQKF1HBE4J32	2.0
	32	24	-1	10	10	10	3 ~ 7	120	SQKF1HDV1J32	SQKF1HBV4J32	2.0
	40	29	-1	10	10	10	3 ~ 7	80	SQKF1HDN1J40	SQKF1HBN4J40	2.13
	40	29	-1	10	10		3 ~ 7	120	SQKF1HDE1J40	SQKF1HBE4J40	2.13
	40	29	-1	10	10	10	3 ~ 7	120	SQKF1HDV1J40	SQKF1HBV4J40	2.13
2	40	29	-1	10	10	10	3 ~ 7	80	SQKF1HDN1K40	SQKF1HBN4K40	2.53
	40	29	-1	10	10		3 ~ 7	120	SQKF1HDE1K40	SQKF1HBE4K40	2.53
	40	29	-1	10	10	10	3 ~ 7	120	SQKF1HDV1K40	SQKF1HBV4K40	2.53
	50	48	-1	10	10	10	3 ~ 7	80	SQKF1HDN1K50	SQKF1HBN4K50	4.13
	50	48	-1	10	10		3 ~ 7	120	SQKF1HDE1K50	SQKF1HBE4K50	4.13
	50	48	-1	10	10	10	3 ~ 7	120	SQKF1HDV1K50	SQKF1HBV4K50	4.13

SQKT 3/2-way direct acting air operated valve

SQKT1 Normally closed

SQKT2 Normally open

SQKT3 Diverting

SQKT4 Universal

1. 3/2 way direct acting operated valve use air operate to replace solenoid drive to operated the valve open and closed
2. Ambient temperature：0℃~65℃；
3. Control pressure： 3～7kgf/cm^2；
4. Body material： Brass, Stainless steel；
5. Seal material： NBR、VITON、EPDM and so on
6. Flow as the arrow, best position is the air operated upright direction.



Air Control Valves Model Numbering System for Order

1	2	3	4	5	6	7	8	9
Valve Series	Mode of Operation	Air operated type	Air operated material	Seal material	Body material	Pipe size	Orifice (mm)	Options
SQKT	**1**	**H**	**D**	**N**	**1**	**D**	**16**	□
SQKT	1: Normally closed 2: Normally open 3: Diverting 4: Universal	H= piston type	D=Brass B=Stainless steel	N=NBR V=VITON E=EPDM	1=Brass 4=SS304 9=Brass 3=SS316 5=SS316	A=1/8 " B=1/4 "	V1=1.5 V2=2.0 V3=2.5 V4=3.0 V5=4.0	N=NPT

External Dimensions

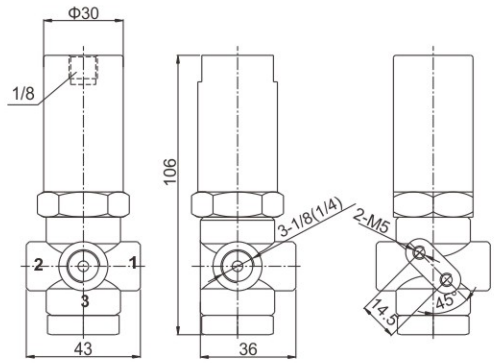

Body: 1、5
net：0.52kg

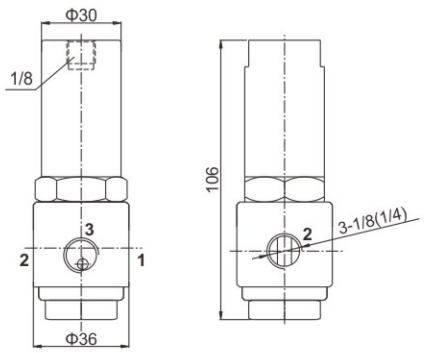

Body: 9、4、3
net：0.56kg

SQKT 3/2-way direct acting air operated valve

SQKT1 Normally Closed Specification List

Pipe Conn -ection	Orifice mm	CV Factor	Operating pressure differential (kgf/cm²) Min.	Max. Air Gas	Max. Water Liquids	Max. Light oil ≤20CST	Min control pressure (kgf/cm²)	Max. fluids Temp. ℃	Model Code Forged Brass	Model Code Stainless Steel
1/8"	1.5	0.07	0	13	13	13	3 ~ 7	80	SQKT1HDN1AV1	SQKT1HBN3AV1
	1.5	0.07	0	13	13		3 ~ 7	120	SQKT1HDE1AV1	SQKT1HBE3AV1
	1.5	0.07	0	13	13	13	3 ~ 7	120	SQKT1HDV1AV1	SQKT1HBV3AV1
	2.0	0.14	0	12	12	12	3 ~ 7	80	SQKT1HDN1AV2	SQKT1HBN3AV2
	2.0	0.14	0	12	12		3 ~ 7	120	SQKT1HDE1AV2	SQKT1HBE3AV2
	2.0	0.14	0	12	12	12	3 ~ 7	120	SQKT1HDV1AV2	SQKT1HBV3AV2
	2.5	0.21	0	10	10	10	3 ~ 7	80	SQKT1HDN1AV3	SQKT1HBN3AV3
	2.5	0.21	0	10	10		3 ~ 7	120	SQKT1HDE1AV3	SQKT1HBE3AV3
	2.5	0.21	0	10	10	10	3 ~ 7	120	SQKT1HDV1AV3	SQKT1HBV3AV3
	3.0	0.25	0	8	8	8	3 ~ 7	80	SQKT1HDN1AV4	SQKT1HBN3AV4
	3.0	0.25	0	8	8		3 ~ 7	120	SQKT1HDE1AV4	SQKT1HBE3AV4
	3.0	0.25	0	8	8	8	3 ~ 7	120	SQKT1HDV1AV4	SQKT1HBV3AV4
	4.0	0.35	0	7	7	7	3 ~ 7	80	SQKT1HDN1AV5	SQKT1HBN3AV5
	4.0	0.35	0	7	7		3 ~ 7	120	SQKT1HDE1AV5	SQKT1HBE3AV5
	4.0	0.35	0	7	7	7	3 ~ 7	120	SQKT1HDV1AV5	SQKT1HBV3AV5
1/4"	1.5	0.07	0	13	13	13	3 ~ 7	80	SQKT1HDN1BV1	SQKT1HBN3BV1
	1.5	0.07	0	13	13		3 ~ 7	120	SQKT1HDE1BV1	SQKT1HBE3BV1
	1.5	0.07	0	13	13	13	3 ~ 7	120	SQKT1HDV1BV1	SQKT1HBV3BV1
	2.0	0.14	0	12	12	12	3 ~ 7	80	SQKT1HDN1BV2	SQKT1HBN3BV2
	2.0	0.14	0	12	12		3 ~ 7	120	SQKT1HDE1BV2	SQKT1HBE3BV2
	2.0	0.14	0	12	12	12	3 ~ 7	120	SQKT1HDV1BV2	SQKT1HBV3BV2
	2.5	0.21	0	10	10	10	3 ~ 7	80	SQKT1HDN1BV3	SQKT1HBN3BV3
	2.5	0.21	0	10	10		3 ~ 7	120	SQKT1HDE1BV3	SQKT1HBE3BV3
	2.5	0.21	0	10	10	10	3 ~ 7	120	SQKT1HDV1BV3	SQKT1HBV3BV3
	3.0	0.25	0	8	8	8	3 ~ 7	80	SQKT1HDN1BV4	SQKT1HBN3BV4
	3.0	0.25	0	8	8		3 ~ 7	120	SQKT1HDE1BV4	SQKT1HBE3BV4
	3.0	0.25	0	8	8	8	3 ~ 7	120	SQKT1HDV1BV4	SQKT1HBV3BV4
	4.0	0.35	0	7	7	7	3 ~ 7	80	SQKT1HDN1BV5	SQKT1HBN3BV5
	4.0	0.35	0	7	7		3 ~ 7	120	SQKT1HDE1BV5	SQKT1HBE3BV5
	4.0	0.35	0	7	7	7	3 ~ 7	120	SQKT1HDV1BV5	SQKT1HBV3BV5

SQKT Narmally Colsed Flow Chart

Pressure：No.2

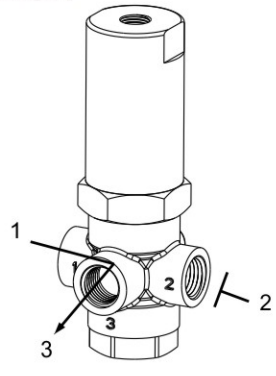

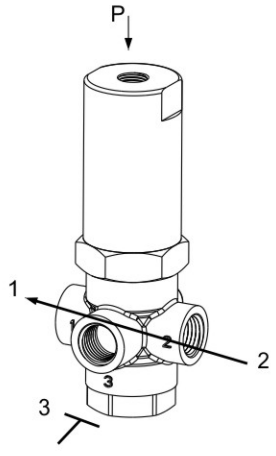

SQKT 3/2-way direct acting air operated valve

SQKT2 Normally Open Specification List

Pipe Conn -ection	Orifice mm	CV Factor	Operating pressure differential (kgf/cm²) Min.	Max. Air Gas	Max. Water Liquids	Max. Light oil ≤20CST	Min control pressure (kgf/cm²)	Max. fluids Temp. ℃	Model Code Forged Brass	Model Code Stainless Steel
1/8"	1.5	0.07	0	13	13	13	3 ~ 7	80	SQKT2HDN1AV1	SQKT2HBN3AV1
	1.5	0.07	0	13	13		3 ~ 7	120	SQKT2HDE1AV1	SQKT2HBE3AV1
	1.5	0.07	0	13	13	13	3 ~ 7	120	SQKT2HDV1AV1	SQKT2HBV3AV1
	2.0	0.14	0	11	11	11	3 ~ 7	80	SQKT2HDN1AV2	SQKT2HBN3AV2
	2.0	0.14	0	11	11		3 ~ 7	120	SQKT2HDE1AV2	SQKT2HBE3AV2
	2.0	0.14	0	11	11	11	3 ~ 7	120	SQKT2HDV1AV2	SQKT2HBV3AV2
	2.5	0.21	0	10	10	10	3 ~ 7	80	SQKT2HDN1AV3	SQKT2HBN3AV3
	2.5	0.21	0	10	10		3 ~ 7	120	SQKT2HDE1AV3	SQKT2HBE3AV3
	2.5	0.21	0	10	10	10	3 ~ 7	120	SQKT2HDV1AV3	SQKT2HBV3AV3
	3.0	0.25	0	7	7	7	3 ~ 7	80	SQKT2HDN1AV4	SQKT2HBN3AV4
	3.0	0.25	0	7	7		3 ~ 7	120	SQKT2HDE1AV4	SQKT2HBE3AV4
	3.0	0.25	0	7	7	7	3 ~ 7	120	SQKT2HDV1AV4	SQKT2HBV3AV4
	4.0	0.35	0	5.5	5.5	5.5	3 ~ 7	80	SQKT2HDN1AV5	SQKT2HBN3AV5
	4.0	0.35	0	5.5	5.5		3 ~ 7	120	SQKT2HDE1AV5	SQKT2HBE3AV5
	4.0	0.35	0	5.5	5.5	5.5	3 ~ 7	120	SQKT2HDV1AV5	SQKT2HBV3AV5
1/4"	1.5	0.07	0	13	13	13	3 ~ 7	80	SQKT2HDN1BV1	SQKT2HBN3BV1
	1.5	0.07	0	13	13		3 ~ 7	120	SQKT2HDE1BV1	SQKT2HBE3BV1
	1.5	0.07	0	13	13	13	3 ~ 7	120	SQKT2HDV1BV1	SQKT2HBV3BV1
	2.0	0.14	0	11	11	11	3 ~ 7	80	SQKT2HDN1BV2	SQKT2HBN3BV2
	2.0	0.14	0	11	11		3 ~ 7	120	SQKT2HDE1BV2	SQKT2HBE3BV2
	2.0	0.14	0	11	11	11	3 ~ 7	120	SQKT2HDV1BV2	SQKT2HBV3BV2
	2.5	0.21	0	10	10	10	3 ~ 7	80	SQKT2HDN1BV3	SQKT2HBN3BV3
	2.5	0.21	0	10	10		3 ~ 7	120	SQKT2HDE1BV3	SQKT2HBE3BV3
	2.5	0.21	0	10	10	10	3 ~ 7	120	SQKT2HDV1BV3	SQKT2HBV3BV3
	3.0	0.25	0	7	7	7	3 ~ 7	80	SQKT2HDN1BV4	SQKT2HBN3BV4
	3.0	0.25	0	7	7		3 ~ 7	120	SQKT2HDE1BV4	SQKT2HBE3BV4
	3.0	0.25	0	7	7	7	3 ~ 7	120	SQKT2HDV1BV4	SQKT2HBV3BV4
	4.0	0.35	0	5.5	5.5	5.5	3 ~ 7	80	SQKT2HDN1BV5	SQKT2HBN3BV5
	4.0	0.35	0	5.5	5.5		3 ~ 7	120	SQKT2HDE1BV5	SQKT2HBE3BV5
	4.0	0.35	0	5.5	5.5	5.5	3 ~ 7	120	SQKT2HDV1BV5	SQKT2HBV3BV5

SQKT Normally Open Flow Chart

Pressure: No.3

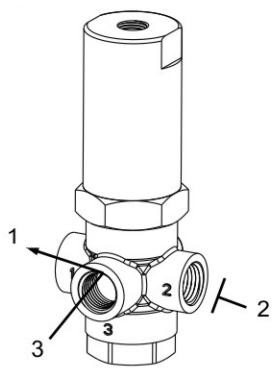

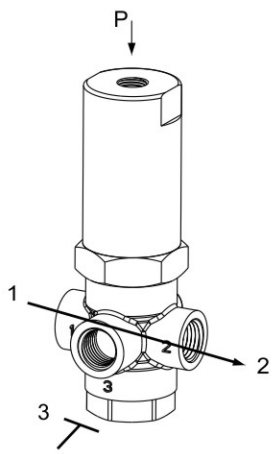

SQKT 3/2-way direct acting air operated valve

SQKT3 Diverting Specification List

Pipe Conn -ection	Orifice mm	CV Factor	Operating pressure differential (kgf/cm²) Min.	Max. Air Gas	Max. Water Liquids	Max. Light oil ≤20CST	Min control pressure (kgf/cm²)	Max. fluids Temp. ℃	Model Code Forged Brass	Model Code Stainless Steel
1/8"	1.5	0.07	0	13	13	13	3 ~ 7	80	SQKT3HDN1AV1	SQKT3HBN3AV1
	1.5	0.07	0	13	13		3 ~ 7	120	SQKT3HDE1AV1	SQKT3HBE3AV1
	1.5	0.07	0	13	13	13	3 ~ 7	120	SQKT3HDV1AV1	SQKT3HBV3AV1
	2.0	0.14	0	11	11	11	3 ~ 7	80	SQKT3HDN1AV2	SQKT3HBN3AV2
	2.0	0.14	0	11	11		3 ~ 7	120	SQKT3HDE1AV2	SQKT3HBE3AV2
	2.0	0.14	0	11	11	11	3 ~ 7	120	SQKT3HDV1AV2	SQKT3HBV3AV2
	2.5	0.21	0	10	10	10	3 ~ 7	80	SQKT3HDN1AV3	SQKT3HBN3AV3
	2.5	0.21	0	10	10		3 ~ 7	120	SQKT3HDE1AV3	SQKT3HBE3AV3
	2.5	0.21	0	10	10	10	3 ~ 7	120	SQKT3HDV1AV3	SQKT3HBV3AV3
	3.0	0.25	0	10	10	10	3 ~ 7	80	SQKT3HDN1AV4	SQKT3HBN3AV4
	3.0	0.25	0	10	10		3 ~ 7	120	SQKT3HDE1AV4	SQKT3HBE3AV4
	3.0	0.25	0	10	10	10	3 ~ 7	120	SQKT3HDV1AV4	SQKT3HBV3AV4
	4.0	0.35	0	10	10	10	3 ~ 7	80	SQKT3HDN1AV5	SQKT3HBN3AV5
	4.0	0.35	0	10	10		3 ~ 7	120	SQKT3HDE1AV5	SQKT3HBE3AV5
	4.0	0.35	0	10	10	10	3 ~ 7	120	SQKT3HDV1AV5	SQKT3HBV3AV5
1/4"	1.5	0.07	0	13	13	13	3 ~ 7	80	SQKT3HDN1BV1	SQKT3HBN3BV1
	1.5	0.07	0	13	13		3 ~ 7	120	SQKT3HDE1BV1	SQKT3HBE3BV1
	1.5	0.07	0	13	13	13	3 ~ 7	120	SQKT3HDV1BV1	SQKT3HBV3BV1
	2.0	0.14	0	11	11	11	3 ~ 7	80	SQKT3HDN1BV2	SQKT3HBN3BV2
	2.0	0.14	0	11	11		3 ~ 7	120	SQKT3HDE1BV2	SQKT3HBE3BV2
	2.0	0.14	0	11	11	11	3 ~ 7	120	SQKT3HDV1BV2	SQKT3HBV3BV2
	2.5	0.21	0	10	10	10	3 ~ 7	80	SQKT3HDN1BV3	SQKT3HBN3BV3
	2.5	0.21	0	10	10		3 ~ 7	120	SQKT3HDE1BV3	SQKT3HBE3BV3
	2.5	0.21	0	10	10	10	3 ~ 7	120	SQKT3HDV1BV3	SQKT3HBV3BV3
	3.0	0.25	0	10	10	10	3 ~ 7	80	SQKT3HDN1BV4	SQKT3HBN3BV4
	3.0	0.25	0	10	10		3 ~ 7	120	SQKT3HDE1BV4	SQKT3HBE3BV4
	3.0	0.25	0	10	10	10	3 ~ 7	120	SQKT3HDV1BV4	SQKT3HBV3BV4
	4.0	0.35	0	10	10	10	3 ~ 7	80	SQKT3HDN1BV5	SQKT3HBN3BV5
	4.0	0.35	0	10	10		3 ~ 7	120	SQKT3HDE1BV5	SQKT3HBE3BV5
	4.0	0.35	0	10	10	10	3 ~ 7	120	SQKT3HDV1BV5	SQKT3HBV1BV5

SQKT Diverting Flow Chart

Pressure：No.1

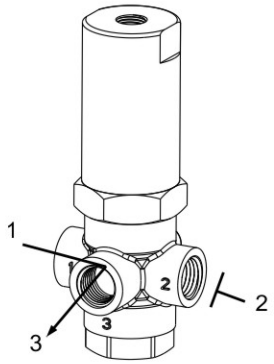

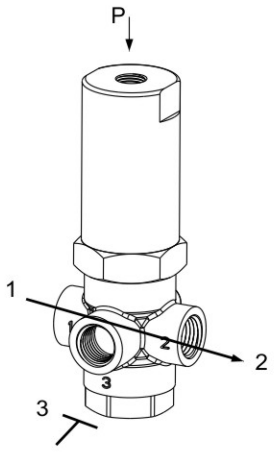

SQKT 3/2-way direct acting air operated valve

SQKT4 Universal Specification List

Pipe Conn -ection	Orifice mm	CV Factor	Operating pressure differential (kgf/cm²) Min.	Max. Air Gas	Max. Water Liquids	Max. Light oil ≤20CST	Min control pressure (kgf/cm²)	Max. fluids Temp. ℃	Model Code Forged Brass	Model Code Stainless Steel
1/8"	1.5	0.07	0	12	12	12	3 ~ 7	80	SQKT4HDN1AV1	SQKT4HBN3AV1
	1.5	0.07	0	12	12		3 ~ 7	120	SQKT4HDE1AV1	SQKT4HBE3AV1
	1.5	0.07	0	12	12	12	3 ~ 7	120	SQKT4HDV1AV1	SQKT4HBV3AV1
	2.0	0.14	0	10	10	10	3 ~ 7	80	SQKT4HDN1AV2	SQKT4HBN3AV2
	2.0	0.14	0	10	10		3 ~ 7	120	SQKT4HDE1AV2	SQKT4HBE3AV2
	2.0	0.14	0	10	10	10	3 ~ 7	120	SQKT4HDV1AV2	SQKT4HBV3AV2
	2.5	0.21	0	8	8	8	3 ~ 7	80	SQKT4HDN1AV3	SQKT4HBN3AV3
	2.5	0.21	0	8	8		3 ~ 7	120	SQKT4HDE1AV3	SQKT4HBE3AV3
	2.5	0.21	0	8	8	8	3 ~ 7	120	SQKT4HDV1AV3	SQKT4HBV3AV3
	3.0	0.25	0	5	5	5	3 ~ 7	80	SQKT4HDN1AV4	SQKT4HBN3AV4
	3.0	0.25	0	5	5		3 ~ 7	120	SQKT4HDE1AV4	SQKT4HBE3AV4
	3.0	0.25	0	5	5	5	3 ~ 7	120	SQKT4HDV1AV4	SQKT4HBV3AV4
	4.0	0.35	0	4	4	4	3 ~ 7	80	SQKT4HDN1AV5	SQKT4HBN3AV5
	4.0	0.35	0	4	4		3 ~ 7	120	SQKT4HDE1AV5	SQKT4HBE3AV5
	4.0	0.35	0	4	4	4	3 ~ 7	120	SQKT4HDV1AV5	SQKT4HBV3AV5
1/4"	1.5	0.07	0	12	12	12	3 ~ 7	80	SQKT4HDN1BV1	SQKT4HBN3BV1
	1.5	0.07	0	12	12		3 ~ 7	120	SQKT4HDE1BV1	SQKT4HBE3BV1
	1.5	0.07	0	12	12	12	3 ~ 7	120	SQKT4HDV1BV1	SQKT4HBV3BV1
	2.0	0.14	0	10	10	10	3 ~ 7	80	SQKT4HDN1BV2	SQKT4HBN3BV2
	2.0	0.14	0	10	10		3 ~ 7	120	SQKT4HDE1BV2	SQKT4HBE3BV2
	2.0	0.14	0	10	10	10	3 ~ 7	120	SQKT4HDV1BV2	SQKT4HBV3BV2
	2.5	0.21	0	8	8	8	3 ~ 7	80	SQKT4HDN1BV3	SQKT4HBN3BV3
	2.5	0.21	0	8	8		3 ~ 7	120	SQKT4HDE1BV3	SQKT4HBE3BV3
	2.5	0.21	0	8	8	8	3 ~ 7	120	SQKT4HDV1BV3	SQKT4HBV3BV3
	3.0	0.25	0	5	5	5	3 ~ 7	80	SQKT4HDN1BV4	SQKT4HBN3BV4
	3.0	0.25	0	5	5		3 ~ 7	120	SQKT4HDE1BV4	SQKT4HBE3BV4
	3.0	0.25	0	5	5	5	3 ~ 7	120	SQKT4HDV1BV4	SQKT4HBV3BV4
	4.0	0.35	0	4	4	4	3 ~ 7	80	SQKT4HDN1BV5	SQKT4HBN3BV5
	4.0	0.35	0	4	4		3 ~ 7	120	SQKT4HDE1BV5	SQKT4HBE3BV5
	4.0	0.35	0	4	4	4	3 ~ 7	120	SQKT4HDV1BV5	SQKT4HBV3BV5

SQKT Universal Flow Chart

Pressure: All port

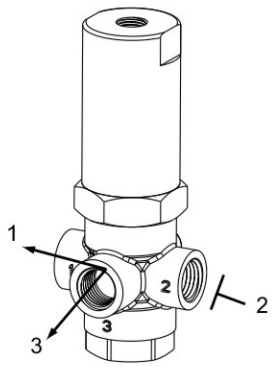

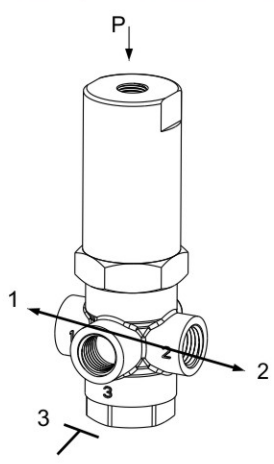

SQKE direct acting manifold type air operated valve

1. 2/2-way direct acting manifold type air operated valve,one inlet many outlets
2. Ambient temperature：0℃~65℃；
3. Control pressure： 3～7kgf/cm^2；
4. Working pressure： 0～10kgf/cm^2；
5. Body material： Brass, Stainless steel aluminum
6. Seal material： NBR、VITON、EPDM and so on
7. Flow as the arrow, best position is the air operated upright direction.

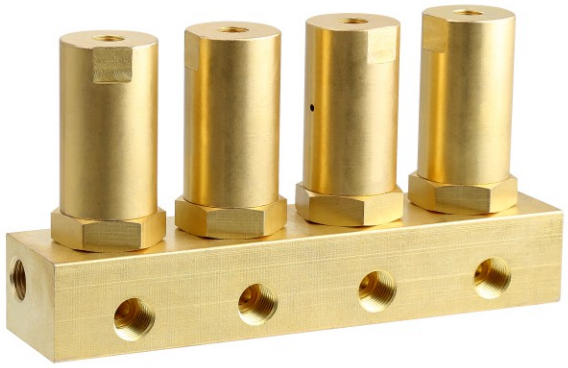

Air Control Valves Model Numbering System for Order

1	2	3	4	5	6	7	8	9	10
Valve Series	Mode of Operation	Air operated type	Air operated material	Seal material	Body material	Pipe size	Orifice (mm)	Number Manifold	Options
SQKE	**1**	**H**	**D**	**N**	**1**	**A**	**02**	**N4**	□
SQKE	1:Normally Closed	H= piston type	D=Brass B=Stainless steel	N=NBR V=VITON E=EPDM	1=Brass 4=SS304 3=SS316 8=Aluminum	A=1/8 " B=1/4 "	02=2.0 03=3.0 04=4.0 05=5.0 06=6.0	N2=2只 N3=3只 N4=4只 N8=8只	N=NPT

SQKE direct acting manifold type air operated valve

External Dimensions

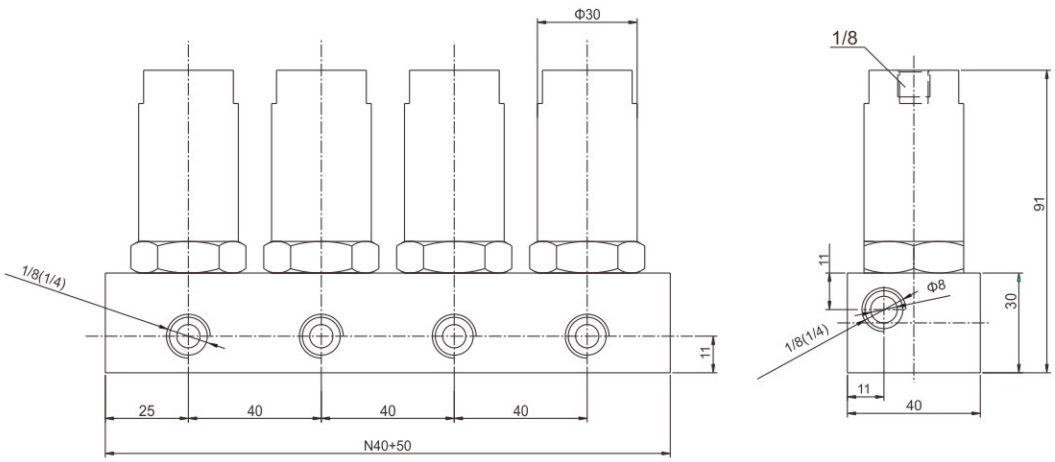

Valve Selection List

Pipe Conn -ection	Orifice mm	CV Factor	Operating pressure differential (kgf/cm^2)				Min control pressure (kgf/cm^2)	Max. fluids Temp. ℃	Model Code
			Min.	Max.					
				Air Gas	Water Liquids	Light oil ⩽20CST			
1/8"	2.0	0.15	0	10	10	10	3 ~ 7	120	SQKE1HDV1A02N4
	3.0	0.23	0	10	10	10	3 ~ 7	120	SQKE1HDV1A03N4
	4.0	0.44	0	10	10	10	3 ~ 7	120	SQKE1HDV1A04N4
	5.0	0.5	0	10	10	10	3 ~ 7	120	SQKE1HDV1A05N4
	6.0	0.8	0	10	10	10	3 ~ 7	120	SQKE1HDV1A06N4
1/4"	2.0	0.15	0	10	10	10	3 ~ 7	120	SQKE1HDV1B02N4
	3.0	0.23	0	10	10	10	3 ~ 7	120	SQKE1HDV1B03N4
	4.0	0.44	0	10	10	10	3 ~ 7	120	SQKE1HDV1B04N4
	5.0	0.5	0	10	10	10	3 ~ 7	120	SQKE1HDV1B05N4
	6.0	0.8	0	10	10	10	3 ~ 7	120	SQKE1HDV1B06N4

SQGM series small diaphragm isolation air operated valve· normally open

2/2 -way normally open， Pneumatic head ventilation closed, exhaust open；

This series of pneumatic valve adopts diaphragm isolation structure, the medium only with the valve body and diaphragm contact；

Small size, high pressure, good corrosion resistance, wide application range

Ambient temperature：0℃~65℃ Medium temperature：0-80℃

Control pressure：5-7kgf/cm^2 Pressure：0-16kgf/cm^2

Body material：SS316 Seal material：PTFE

Medium：Weak acid alkali fluid, ultra clean fluid, etc

Installation method：Install the valve in the direction of the arrow



Solenoid Valves Model Numbering System for Order

1	2	3	4	5	6	7	8	9
Valve Series	Mode of Operation	Air operated type	Air operated material	Seal material	Body material	Pipe size	Orifice (mm)	Options
SQGM	**2**	**H**	**B**	**T**	**3**	**A**	**03**	□
SQGM	2= normally open	H= piston type	B=Stainless steel	T=PTFE	3=SS316	A=1/8 " B=1/4 "	02=2.0 03=3.0 04=4.0 05=5.0	N=NPT

External Dimensions

1/8、1/4

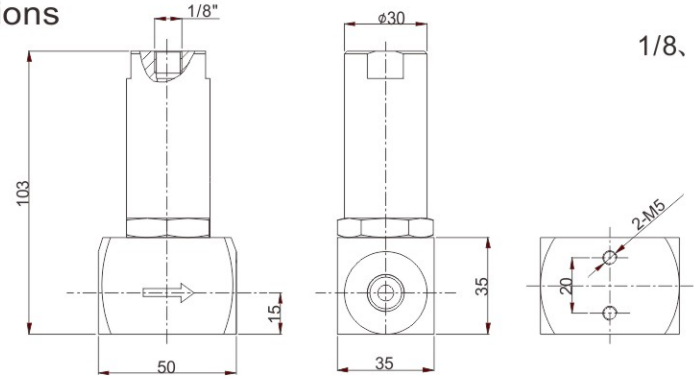

3/8、1/2

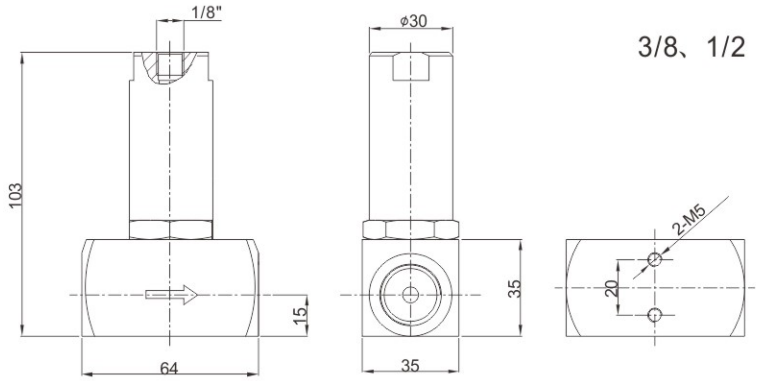

SQGM series small diaphragm isolation air operated valve· normally open

Valve Selection List

Pipe Conn -ection	Orifice mm	CV Factor	Operating pressure differential (kgf/cm^2)		Control pressure (kgf/cm^2)	Max. fluids Temp. ℃	Model Code	Weight KG
			Min.	Max.				
1/8"	2.0	0.15	0	16	5~7	80	SQGM2HBT3A02	0.73
	3.0	0.25	0	12	5~7	80	SQGM2HBT3A03	
	4.0	0.4	0	8	5~7	80	SQGM2HBT3A04	
	5.0	0.65	0	5	5~7	80	SQGM2HBT3A05	
1/4"	2.0	0.15	0	16	5~7	80	SQGM2HBT3B02	0.72
	3.0	0.25	0	12	5~7	80	SQGM2HBT3B03	
	4.0	0.4	0	8	5~7	80	SQGM2HBT3B04	
	5.0	0.65	0	5	5~7	80	SQGM2HBT3B05	
3/8"	2.0	0.15	0	16	5~7	80	SQGM2HBT3C02	0.71
	3.0	0.25	0	12	5~7	80	SQGM2HBT3C03	
	4.0	0.4	0	8	5~7	80	SQGM2HBT3C04	
	5.0	0.65	0	5	5~7	80	SQGM2HBT3C05	
1/2"	2.0	0.15	0	16	5~7	80	SQGM2HBT3D02	0.68
	3.0	0.25	0	12	5~7	80	SQGM2HBT3D03	
	4.0	0.4	0	8	5~7	80	SQGM2HBT3D04	
	5.0	0.65	0	5	5~7	80	SQGM2HBT3D05	

SLEM manifold type air control special use solenoid valve

1. 3/2-way normally closed solenoid valve,closed when de-energized,open when energized.
2. Realize the gas diverting, use for control the valve open and closed.
3. Manifold design, one inlet many outlets, can special made by customer require. It can control by many air control valves at same time.
4. This series product, small volume, low power, easy to install, suit for PLC control system.
5. Body material: Brass Stainless steel aluminum Orifice: ϕ 1.2mm
6. Fluid medium: gas, Working pressure: 0 ~ 9kgf/cm^2
7. Flow as the arrow, best position is the solenoid vertical and upright direction
8. Voltage: AC220V 6VA DC24V 6W (other voltage can be special made)
   Voltage tolerance -10% ~ +10%
9. Seal material: NBR（fluid medium temp.:≤80℃）
10. Ambient temp.: 0℃~65℃





Solenoid Valves Model Numbering System for Order

1	2	3	4	5	6	7	8	9	10	11
Valve Series	Mode of Operation	Coil Type	Coil Class	Voltage	Seal material	Body material	Pipe size	Orifice (mm)	Outlet number	Options
SLEM	**1**	**D**	**H**	**02**	**N**	**1**	**A**	**C1**	**N8**	□
SLEM	1:Normally Closed	D=DIN standard connections, fully encapsulated	H= H Class	02= AC220V 13= DC24V	N=NBR	1=Brass 4=SS304 3=SS316 8=Aluminum	A=1/8 " B=1/4 "	C1=1.2	N4=4 N8=8	N=NPT L=Neon Lamp

SLEM manifold type air control special use solenoid valve

External Dimension（one inlet four outlets）

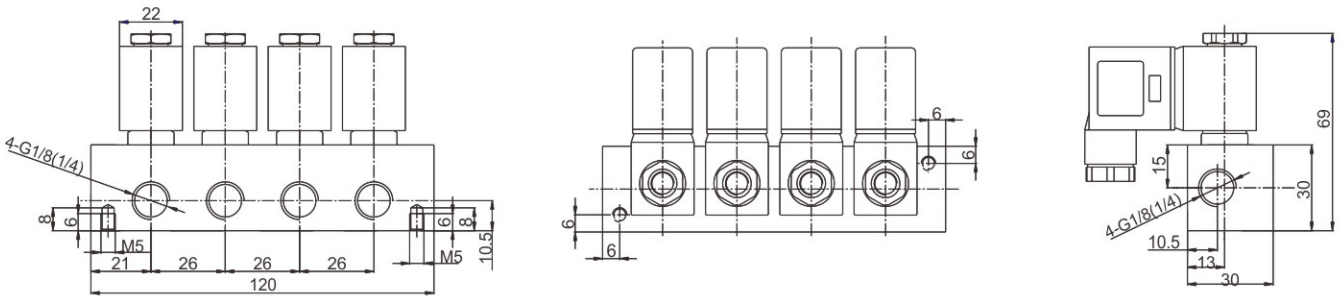

External Dimension（one inlet eight outlets）

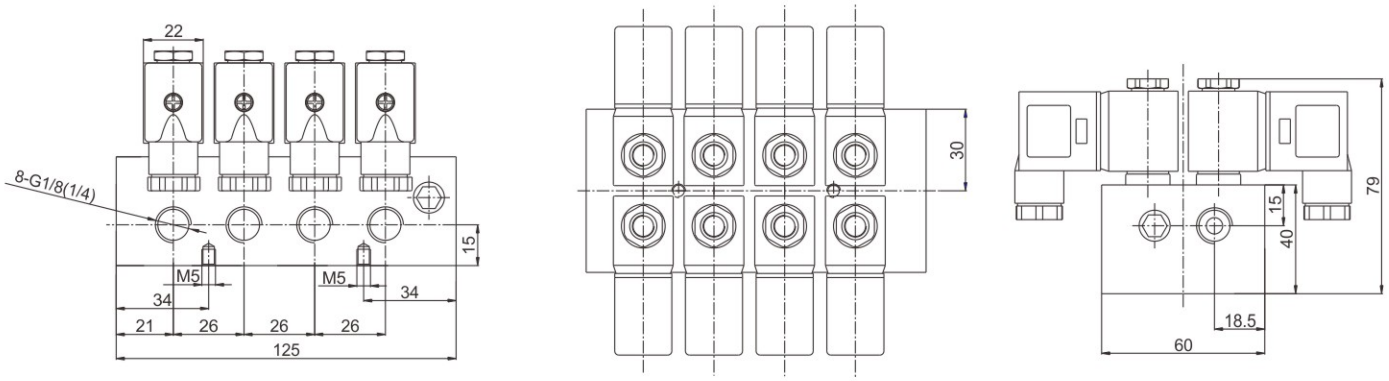

Example

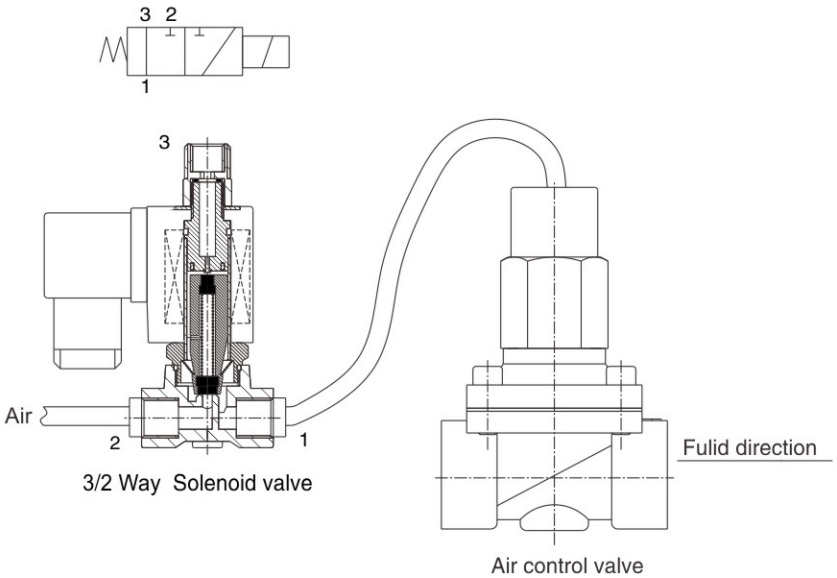

Connect the pipe as the drawing, 3/2–way valve when energized, air flow from 2 to 1 port. When the gas into the air control valve,Lift air control device, open the solenoid valve. When de–energized

Port 2 closed, the air can’ t go to the air control valve, the air go out from 1 to 3 port.

The air control device returns under spring force , closed the valve. If the air control valve is normally open type, the work type will be opposite.

JZF series angle seat valve

Angle Seat Valve Numbering System for Order

1	2	3	4	5	6	7	8	9
Valve series	Mode of Operation	Actuator material	Actuator specifications	Seal material	Body material	Connection type	Orifice size	others
JZF	1	G	1	T	3	C	10	
	1=Single acting normally closed 2=Double-acting normally closed	G: Aluminum alloy H: Stainless steel	Actuator material: Aluminum alloy 1=50 2=63 3=80 4=100 5=50 (recoil) 6=63 (recoil) 7=80 (recoil) 8=10 (recoil) Actuator material: Stainless steel 1=50 2=70 3=100 4=125 5=50 (recoil) 6=70 (recoil) 7=100 (recoil) 8=125 (recoil)	T=Teflon (normally Temp) R=RTFE (steam)	3=SS316 (normal) 4=SS304	screw thread: (normal G) C=3/8" D=1/2" E=3/4" G=1" H=1-1/4" J=1-1/2" K=2" L=2-1/2" welded: WA=ASME BPE WB=DIN11850.1 WC=DIN11850.2 WD=DIN11850.3 WE=IS01127 /4200 WF=SMS3008 Special made need to provide pipe size	10=10.0 15=15.0 20=20.0 25=25.0 32=32.0 40=40.0 50=50.0 65=65.0	N=NPT connections

Note: welded and socket welding Angle seat valve selection, please let us know the pipe diameter and wall thickness. According to different perform equipment quality, Angle seat valve (material for aluminium alloy) and divided into G series H series for stainless steel (material)

JZF series angle seat valve

Application industry

Beer beverage, disinfection equipment, rubber machinery, textile printing and dyeing, pharmaceutical, medical equipment, food processing, water treatment equipment, liquid filling equipment etc

Technical parameters

Body material：SS316/SS304　Seal material：PTFE/RTFE
Orifice size：DN10-DN65
Connection type：screw thread（G、NPT） welded
Fluid medium：water、 gas or liquid, alcohol, oil, organic solvent, water vapor, weak acid or a weak base solution
Fluid temp：-10℃ to +180℃
Ambient temp：-10℃ to +60℃
viscosity：max 600CST
Control gas：air/neutral gas
Control pressure：0.3 - 1MPa
Mounting：mounts in any position（Please select in explosive environment matching explosion-proof gas control valve）

G series（Actuator material is Aluminum alloy）





H series（Actuator material is Stainless steel）





JZF series angle seat valve

Configuration dimension chart (mm)

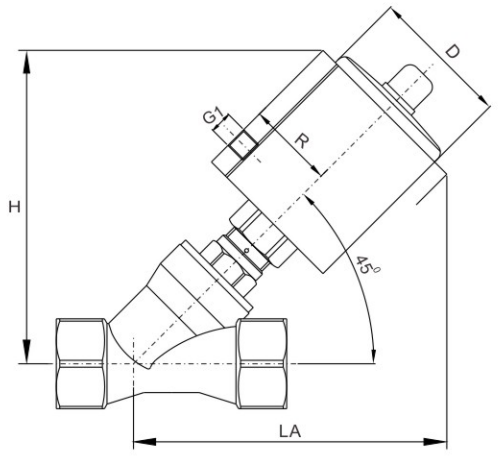

G series

size	Actuator specifications	D	R	G1	H/LA	
					screw thread	welded
DN10	50	61	38	G1/8"	127	128
DN15	50	61	38	G1/8"	127	127
DN20	50	61	38	G1/8"	130	130
DN25	50	61	38	G1/8"	136	136
	63	75	45	G1/8"	158	158
DN32	63	75	45	G1/8"	167	167
	80	94	54	G1/4"	185	185
DN40	63	75	45	G1/8"	174	174
	80	94	54	G1/4"	192	192
	100	115	64	G1/4"	212	212
DN50	63	75	45	G1/8"	185	185
	80	94	54	G1/4"	203	203
	100	115	64	G1/4"	222	222
DN65	80	94	54	G1/4"	224	224
	100	115	64	G1/4"	244	244

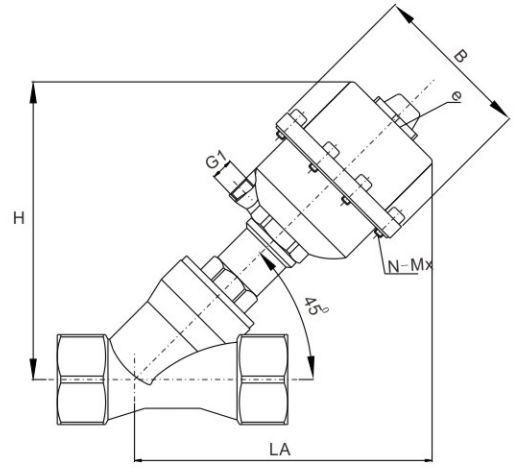

H series

size	Actuator specifications	ΦB	G1	E	N-Mx	H/LA	
						screw thread	welded
DN10	50	71	G1/8"	M16×1.5	6-M4	122	122
DN15	50	71	G1/8"	M16×1.5	6-M4	121	121
DN20	50	71	G1/8"	M16×1.5	6-M4	123	123
	70	94	G1/8"	M16×1.5	8-M5	141	141
DN25	50	71	G1/8"	M16×1.5	6-M4	130	130
	70	94	G1/8"	M16×1.5	8-M5	148	148
DN32	70	94	G1/8"	M16×1.5	8-M5	157	157
	100	132	G1/4"	M22×1.5	8-M6	192	192
DN40	70	94	G1/8"	M16×1.5	8-M5	164	164
	100	132	G1/4"	M22×1.5	8-M6	202	202
	125	160	G1/4"	M22×1.5	14-M6	228	228
DN50	70	94	G1/8"	M16×1.5	8-M5	174	174
	100	132	G1/4"	M22×1.5	8-M6	212	212
	125	160	G1/4"	M22×1.5	14-M6	288	288
DN65	100	132	G1/4"	M22×1.5	8-M6	239	239
	125	140	G1/4"	M22×1.5	14-M6	271	271

JZF series angle seat valve

screw thread type Body size （mm）

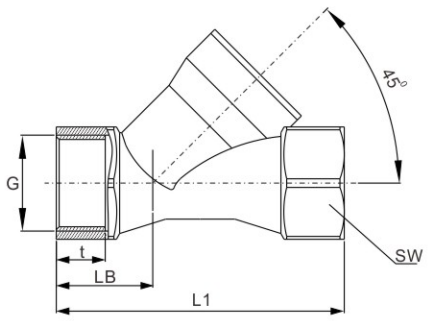

Valve body（screw thread size）						BSP	NPT	NPTF	BSPT
DN	L1	LB	SW		G	t	t	t	t
10	74	25.5	22	6-kt	3/8"	10	10.6	11.7	10.1
15	74	25.5	25	6-kt	1/2"	11.5	15.4	15.4	13.2
20	84	29	31	6-kt	3/4"	14	14.3	15.9	14.5
25	100	33.5	39	6-kt	1"	15	17	19	16.8
32	112	36	50	6-kt	1-1/4"	18	17.5	19.5	19.1
40	126	41	56	6-kt	1-1/2"	18	17.5	19.5	19.1
50	146	46	68	6-kt	2"	22	18	19.9	23.4
65	196	61	85	6-kt	2-1/2"	25	24	30	26.7

welded type Body size （mm）

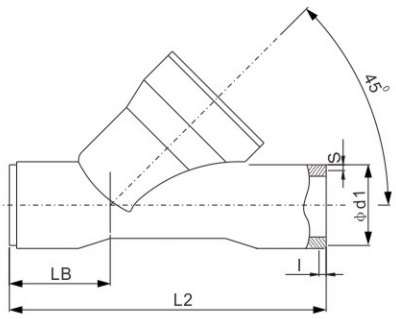

			ISO1127/4200			DIN11850.1			DIN11850.2			DIN11850.3		
DN	L2	LB	l	d1	5	l	d1	s	l	d1	s	l	d1	s
10	70	22	2	17.2	1.6	2	12	1	2	13	1.5	2	14	2
15	88	30	2	21.3	1.6	2	18	1	2	19	1.5	2	20	2
20	92	30	2.5	26.9	1.6	2.5	22	1	2.5	23	1.5	2.5	24	2
25	110	35	3	33.7	2	3	28	1	3	29	1.5	3	30	2
32	126	39	3	42.4	2	3	34	1	3	35	1.5	3	36	2
40	144	46	3	48.3	2	3	40	1	3	41	1.5	3	42	2
50	166	48	3	60.3	2	3	52	1	3	53	1.5	3	54	2
65	208	60	3	76.1	2				3	70	2			

			SMS 3008			ASME BPE			ORIFICE
DN	L2	LB	l	d1	s	l	d1	s	
15	70	22	2.5	12	1	2.5	12.7	1.65	DN10
20	88	30	2	18	1	2	19.05	1.65	DN15
25	92	30	2.5	25	1.2	2.5	25.4	1.65	DN20
40	126	39	3	38	1.2	3	38.1	1.65	DN32
50	144	46	3	51	1.2	3	50.8	1.65	DN40
65	166	48	3	63.5	1.6	3	63.5	1.65	DN50
80	208	60	3	76.1	1.6	3	76.2	1.65	DN65

JZF series angle seat valve

G series Single acting normally closed

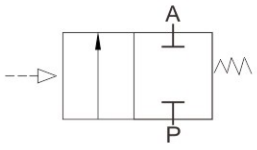

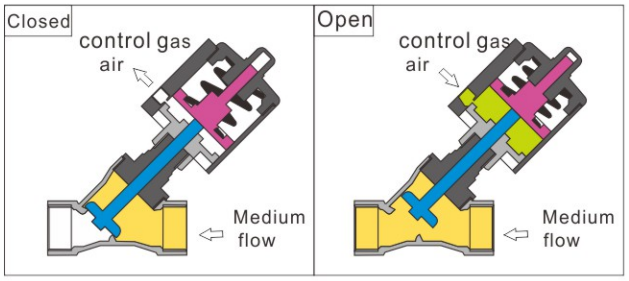

Orifice size (mm)	KV (m^3/h)	Pipe size	Actuator	Min working pressure (MPa)	Max working pressure(Mpa)	Min control pressure(Mpa)	code	weight (kg)
DN10	4. 7	3/8"	50	0	1.6	≥0.3	JZF1G1T3C10	0.8
DN15	4. 7	1/2"	50	0	1.6	≥0.3	JZF1G1T3D15	0.90
DN20	9.5	3/4"	50	0	1.6	0.3-0.4	JZF1G1T3E20	0.95
DN25	18.1	1"	50	0	1.6	0.3-0.55	JZF1G1T3G25	1.52
			63	0	1.6	0.3-0.4	JZF1G2T3G25	1.76
DN32	23.1	1-1/4"	63	0	1.6	0.3-0.55	JZF1G2T3H32	2.54
DN40	32.9	1-1/2"	63	0	1.6	0.3-0.65	JZF1G2T3J40	2.95
DN50	52.8	2"	63	0	1.0	0.3-0.65	JZF1G2T3K50	3.68
			80	0	1.6	0.3-0.66	JZF1G3T3K50	4.85
			100	0	1.6	0.3-0.5	JZF1G4T3K50	5.36
DN65	82	2-1/2"	100	0	1.0	0.3-0.6	JZF1G4T3L65	9.50

Note: 1, all the technical parameters of welded Angle seat valve and screw-type Angle seat valve, connection size refer to welded body size

2, if the medium is steam, pressure will be subject to the temperature, max medium temperature is 180 ℃

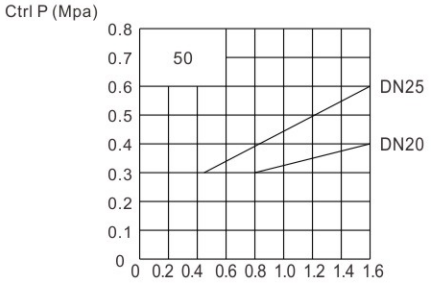

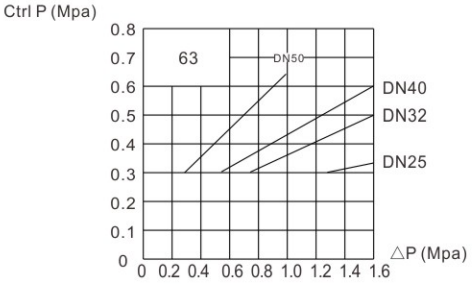

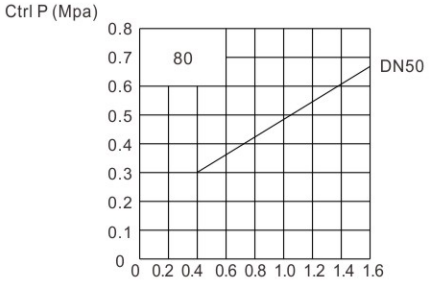

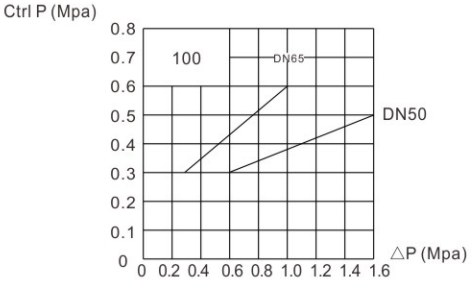

JZF series angle seat valve

H series Single acting normally closed

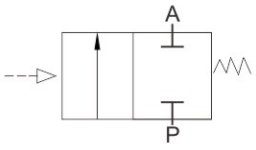

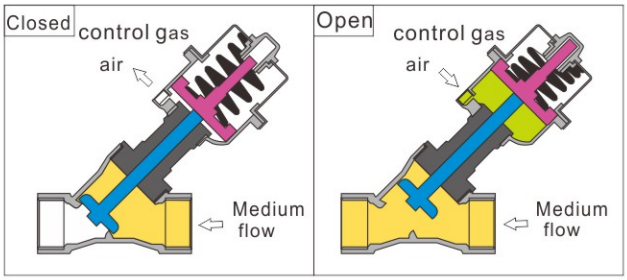

Orifice size (mm)	KV (m^3/h)	Pipe size	Actuator	Min working pressure (MPa)	Max working pressure(Mpa)	Min control pressure(Mpa)	code	weight (kg)
DN10	4. 7	3/8"	50	0	1.6	≥0.3	JZF1H1T3C10	0.8
DN15	4. 7	1/2"	50	0	1.6	≥0.3	JZF1H1T3D15	0.95
DN20	9.5	3/4"	50	0	1.6	0.3-0.4	JZF1H1T3E20	1.00
DN25	18.1	1"	50	0	1.6	0.3-0.6	JZF1H1T3G25	1.33
			70	0	1.6	≥0.3	JZF1H2T3G25	1.85
DN32	23.1	1-1/4"	70	0	1.6	0.3-0.4	JZF1H2T3H32	2.15
			100	0	1.6	≥0.3	JZF1H3T3H32	3.95
DN40	32.9	1-1/2"	70	0	1.6	0.3-0.5	JZF1H2T3J40	3.02
			100	0	1.6	≥0.3	JZF1H3T3J40	4.30
DN50	52.8	2"	70	0	1.0	0.3-0.6	JZF1H2T3K50	4.00
			100	0	1.6	0.3-0.4	JZF1H3T3K50	5.00
			125	0	1.6	≥0.3	JZF1H4T3K50	7.18
DN65	82	2-1/2"	100	0	1.6	0.3-0.8	JZF1H3T3L65	7.39
			125	0	1.6	0.3-0.5	JZF1H4T3L65	10.00

Note: 1, all the technical parameters of welded Angle seat valve and screw-type Angle seat valve, connection size refer to welded body size

2, if the medium is steam, pressure will be subject to the temperature, max medium temperature is 180 ℃

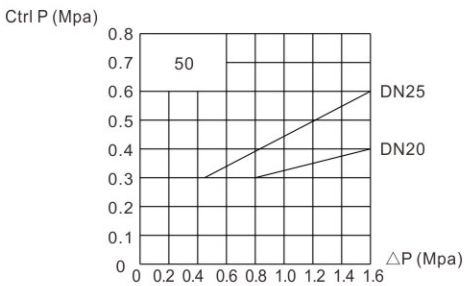

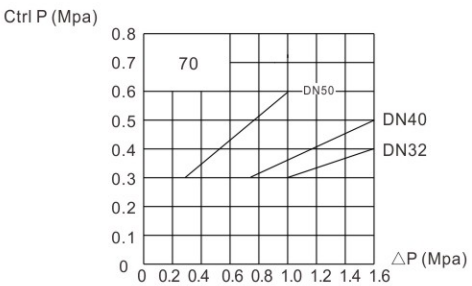

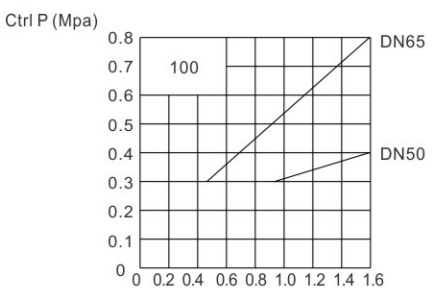

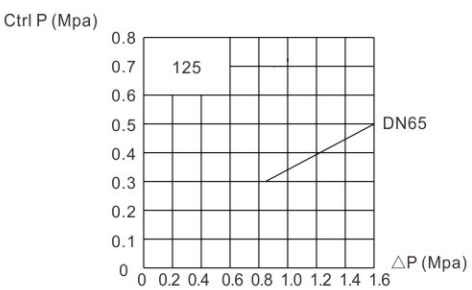

JZF series angle seat valve

G series Single acting normally closed

（Water hammer）

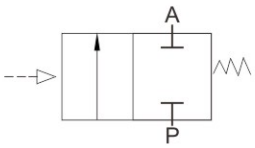

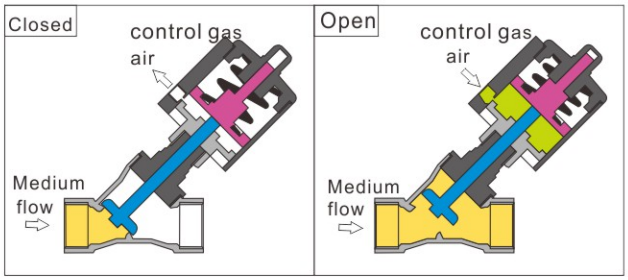

Orifice size (mm)	KV (m^3/h)	Pipe size	Actuator	Min working pressure (MPa)	Max working pressure(Mpa)	Min control pressure(Mpa)	code	weight (kg)
DN10	4. 7	3/8"	50	0	1.6	0.45	JZF1G5T3C10	0.8
DN15	4. 7	1/2"	50	0	1.6	0.45	JZF1G5T3D15	0.90
DN20	9.5	3/4"	50	0	1.0	0.45	JZF1G5T3E20	0.95
DN25	18.1	1"	63	0	0.8	0.45	JZF1G6T3G25	1.76
DN32	23.1	1-1/4"	80	0	1.1	0.4	JZF1G7T3H32	2.54
DN40	32.9	1-1/2"	80	0	0.8	0.4	JZF1G7T3J40	3.23
			100	0	1.6	0.4	JZF1G8T3J40	3.74
DN50	52.8	2"	100	0	0.9	0.4	JZF1G8T3K50	5.36

Note: 1, all the technical parameters of welded Angle seat valve and screw-type Angle seat valve, connection size refer to welded body size

2, if the medium is steam, pressure will be subject to the temperature, max medium temperature is 180 ℃

H series Single acting normally closed

（Water hammer）

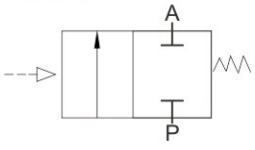

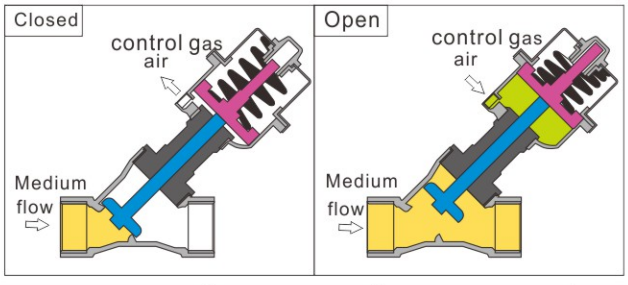

Orifice size (mm)	KV (m^3/h)	Pipe size	Actuator	Min working pressure (MPa)	Max working pressure(Mpa)	Min control pressure(Mpa)	code	weight (kg)
DN10	4. 7	3/8"	50	0	1.6	0.4	JZF1H5T3C10	0.84
DN15	4. 7	1/2"	50	0	1.6	0.4	JZF1H5T3D15	0.95
DN20	9.5	3/4"	50	0	1.0	0.4	JZF1H5T3E20	1.00
			70	0	1.6	0.4	JZF1H6T3E20	1.52
DN25	18.1	1"	70	0	1.4	0.4	JZF1H6T3G25	1.85
DN32	23.1	1-1/4"	70	0	0.7	0.4	JZF1H6T3H32	2.15
			100	0	1.6	0.4	JZF1H7T3H32	3.95
DN40	32.9	1-1/2"	100	0	1.6	0.4	JZF1H7T3J40	4.30
			125	0	1.6	0.45	JZF1H8T3J40	6.38
DN50	52.8	2"	100	0	0.9	0.4	JZF1H7T3K50	5.00
			125	0	1.6	0.45	JZF1H8T3K50	7.18
DN65	82	2-1/2"	125	0	0.8	0.45	JZF1H8T3L65	10.00

Note: 1, all the technical parameters of welded Angle seat valve and screw-type Angle seat valve, connection size refer to welded body size

2, if the medium is steam, pressure will be subject to the temperature, max medium temperature is 180 ℃

ZKS series vacuum solenoid valve

Vacuum solenoid valve model numbering system for order

1	2	3	4	5	6	7	8	9	10
Valve Series	Mode of Operation	Coil Type	Coil Class	Voltage	Seal Material	Body Material	Pipe Size	Orifice (mm)	Options
ZKS	**1**	**H**	**D**		**N**	**1**	**D**	**16**	□
ZKS	1: Normally Closed	D: DIN Standard Connections, Fully Encapsulated A=Metallic Housing DIN standard N: Lead Wires, Water-tight, Fully Encapsulated X: Explosion-proof M: SM Coil	F=F Class	02= AC220V AC230V 01= AC110V AC120V 03= AC36V 04= AC48V 05= AC24V 08= AC380V 12= DC12V 13= DC24V	N= NBR E= EPDM V= VITON	1= Forged Brass 4= SS304 3= SS316	A=1/8" B=1/4" C=3/8" D=1/2" E=3/4" G=1" H=1 1/4" J=1 1/2" K=2" F= F lange Connection	C3=2.5 03=3.0 04=4.0 05=5.0 04=4.0 05=5.0 16=16.0 20=20.0 25=25.0 32=32.0 40=40.0 50=50.0 15=15.0 20=20.0 25=25.0 35=35.0 40=40.0 50=50.0	L= Neon Lamp N=NPT

ZKS compact series 2/2-way direct acting vacuum solenoid valve · normally closed

1. 2/2-way normally closed, closed when -de-energized,open when energized.
2. Body material : Brass , SS304 , SS316
3. Ambient temp.: 0-65℃ Fluid medium : 0-120℃
4. Voltage: AC220V/110V230V/240V 50/60Hz
   DC24V/12V, ±10% Voltage Tolerance
5. Seal material: NBR、EPDM 、VITON
6. Flow as the arrow, best position is the solenoid vertical and upright directionpipeline connection example in vacuum environment



Vacuum pipeline connection example

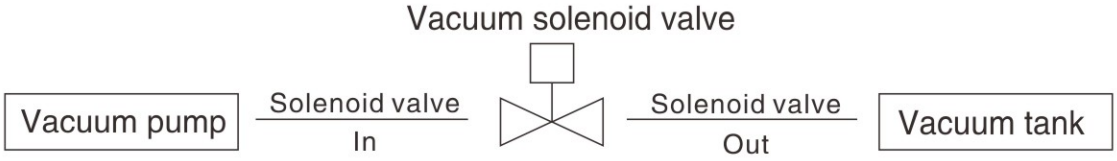

External Dimensions

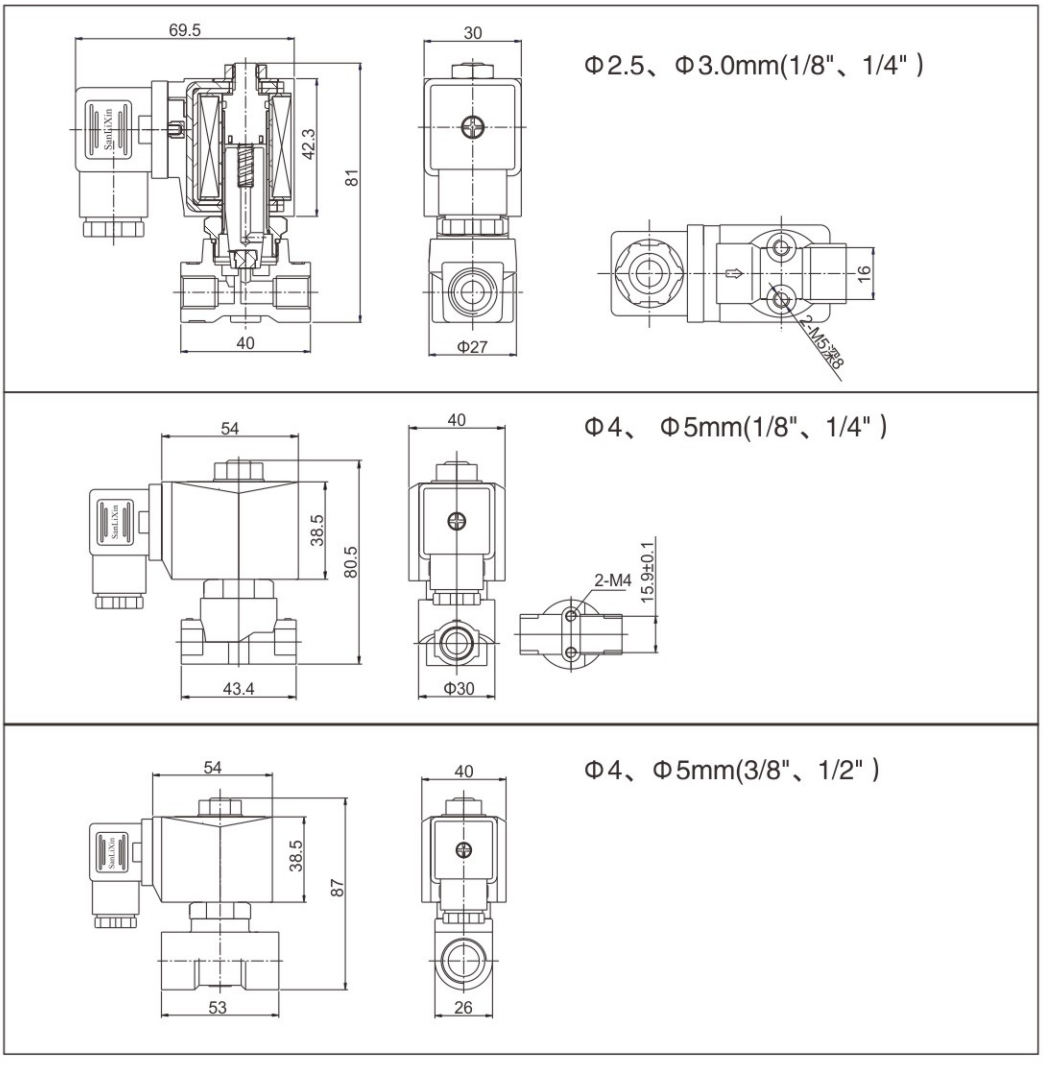

ZKS compact series 2/2-way direct acting vacuum solenoid valve · normally closed

Valve Selection List

Pipe Conn -ection	Orifice (mm)	CV Factor	Operating pressure differential (kgf/cm^2)		Max. fluids Temp. ℃	Coil Type	Power		Coil Class	Model Code AC220V		Weight Kg
			Min.	Max.			VA	W				
							AC 220V	DC 24V		Forged Brass	Stainless Steel	
1/8"	2.5	0.23	-1	5	80	D	22	13	F	ZKS1DF02N1AC3	ZKS1DF02N3AC3	0.37
	2.5	0.23	-1	5	120	D	22	13	F	ZKS1DF02E1AC3	ZKS1DF02E3AC3	0.37
	2.5	0.23	-1	5	120	D	22	13	F	ZKS1DF02V1AC3	ZKS1DF02V3AC3	0.37
	3	0.23	-1	4	80	D	22	13	F	ZKS1DF02N1A03	ZKS1DF02N3A03	0.37
	3	0.23	-1	4	120	D	22	13	F	ZKS1DF02E1A03	ZKS1DF02E3A03	0.37
	3	0.23	-1	4	120	D	22	13	F	ZKS1DF02V1A03	ZKS1DF02V3A03	0.37
	4	0.6	-1	3	80	D	20	20	F	ZKS1DF02N1A04	ZKS1DF02N3A04	0.46
	4	0.6	-1	3	120	D	20	20	F	ZKS1DF02E1A04	ZKS1DF02E3A04	0.46
	4	0.6	-1	3	120	D	20	20	F	ZKS1DF02V1A04	ZKS1DF02V3A04	0.46
	5	0.65	-1	2	80	D	20	20	F	ZKS1DF02N1A05	ZKS1DF02N3A05	0.45
	5	0.65	-1	2	120	D	20	20	F	ZKS1DF02E1A05	ZKS1DF02E3A05	0.45
	5	0.65	-1	2	120	D	20	20	F	ZKS1DF02V1A05	ZKS1DF02V3A05	0.45
1/4"	2.5	0.23	-1	5	80	D	22	13	F	ZKS1DF02N1BC3	ZKS1DF02N3BC3	0.36
	2.5	0.23	-1	5	120	D	22	13	F	ZKS1DF02E1BC3	ZKS1DF02E3BC3	0.36
	2.5	0.23	-1	5	120	D	22	13	F	ZKS1DF02V1BC3	ZKS1DF02V3BC3	0.36
	3	0.23	-1	4	80	D	22	13	F	ZKS1DF02N1B03	ZKS1DF02N3B03	0.36
	3	0.23	-1	4	120	D	22	13	F	ZKS1DF02E1B03	ZKS1DF02E3B03	0.36
	3	0.23	-1	4	120	D	22	13	F	ZKS1DF02V1B03	ZKS1DF02V3B03	0.36
	4	0.6	-1	3	80	D	20	20	F	ZKS1DF02N1B04	ZKS1DF02N3B04	0.45
	4	0.6	-1	3	120	D	20	20	F	ZKS1DF02E1B04	ZKS1DF02E3B04	0.45
	4	0.6	-1	3	120	D	20	20	F	ZKS1DF02V1B04	ZKS1DF02V3B04	0.45
	5	0.65	-1	2	80	D	20	20	F	ZKS1DF02N1B05	ZKS1DF02N3B05	0.44
	5	0.65	-1	2	120	D	20	20	F	ZKS1DF02E1B05	ZKS1DF02E3B05	0.44
	5	0.65	-1	2	120	D	20	20	F	ZKS1DF02V1B05	ZKS1DF02V3B05	0.44
3/8"	4	0.6	-1	3	80	D	20	20	F	ZKS1DF02N1C04	ZKS1DF02N4C04	0.60
	4	0.6	-1	3	120	D	20	20	F	ZKS1DF02E1C04	ZKS1DF02E4C04	0.60
	4	0.6	-1	3	120	D	20	20	F	ZKS1DF02V1C04	ZKS1DF02V4C04	0.60
	5	0.65	-1	2	80	D	20	20	F	ZKS1DF02N1C05	ZKS1DF02N4C05	0.51
	5	0.65	-1	2	120	D	20	20	F	ZKS1DF02E1C05	ZKS1DF02E4C05	0.51
	5	0.65	-1	2	120	D	20	20	F	ZKS1DF02V1C05	ZKS1DF02V4C05	0.51
1/2"	4	0.65	-1	3	80	D	20	20	F	ZKS1DF02N1D04	ZKS1DF02N4D04	0.48
	4	0.65	-1	3	120	D	20	20	F	ZKS1DF02E1D04	ZKS1DF02E4D04	0.48
	4	0.65	-1	3	120	D	20	20	F	ZKS1DF02V1D04	ZKS1DF02V4D04	0.48
	5	0.8	-1	2	80	D	20	20	F	ZKS1DF02N1D05	ZKS1DF02N4D05	0.46
	5	0.8	-1	2	120	D	20	20	F	ZKS1DF02E1D05	ZKS1DF02E4D05	0.46
	5	0.8	-1	2	120	D	20	20	F	ZKS1DF02V1D05	ZKS1DF02V4D05	0.46

ZKS 2/2-way large diameter direct acting vacuum solenoid valve · normally closed

1. 2/2-way normally closed, closed when de-energized, open when energized.
2. Body material :Brass
3. Ambient temp.：0-65℃ Fluid medium：0-120℃
4. Voltage：AC220V/110V230V/240V 50/60Hz
   DC24V/12V, ±10% Voltage Tolerance
5. Seal material：NBR、EPDM 、VITON
6. Flow as the arrow, best position is the solenoid vertical and upright direction



Vacuum pipeline connection example

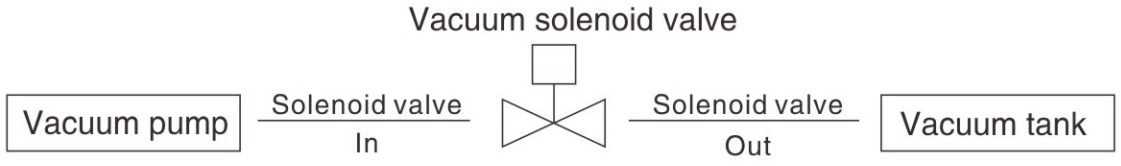

External Dimensions

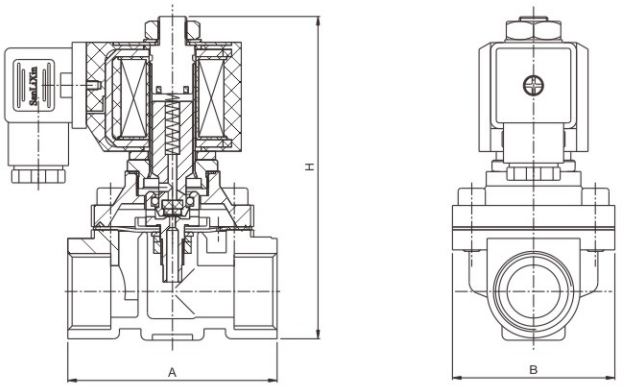

DN15-25mm

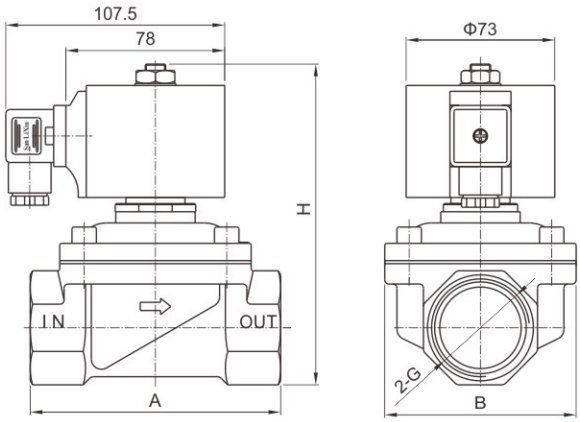

DN32-50mm

ZKS 2/2-way large diameter direct acting vacuum solenoid valve · normally closed

Valve Selection List

Pipe Conn -ection	Orifice mm	CV Factor	Operating pressure differential (kgf/cm^2)			Min control pressure (kgf/cm^2)	Coil Type	Power		Coil Class	External Dimensions A×B×H	Model Code AC220V	Weight Kg
			Min.	Max. Air				VA	W				
				AC	DC			AC 220V	DC 24V				
3/8"	16	4.8	-1	6	5	80	D	20	20	F	69×57×106	ZKS1DF02N1C16	0.9
	16	4.8	-1	6	5	120	D	20	20	F	69×57×106	ZKS1DF02E1C16	0.9
	16	4.8	-1	6	5	120	D	20	20	F	69×57×106	ZKS1DF02V1C16	0.9
1/2"	16	4.8	-1	6	5	80	D	20	20	F	69×57×106	ZKS1DF02N1D16	0.9
	16	4.8	-1	6	5	120	D	20	20	F	69×57×106	ZKS1DF02E1D16	0.9
	16	4.8	-1	6	5	120	D	20	20	F	69×57×106	ZKS1DF02V1D16	0.9
3/4"	20	7.6	-1	6	5	80	D	20	20	F	73×57×114	ZKS1DF02N1E20	1.08
	20	7.6	-1	6	5	120	D	20	20	F	73×57×114	ZKS1DF02E1E20	1.08
	20	7.6	-1	6	5	120	D	20	20	F	73×57×114	ZKS1DF02V1E20	1.08
1"	20	7.6	-1	6	5	80	D	20	20	F	80×62×117	ZKS1DF02N1G20	1.2
	20	7.6	-1	6	5	120	D	20	20	F	80×62×117	ZKS1DF02E1G20	1.2
	20	7.6	-1	6	5	120	D	20	20	F	80×62×117	ZKS1DF02V1G20	1.2
	25	12	-1	6	5	80	D	20	20	F	99×77×121	ZKS1DF02N1G25	1.4
	25	12	-1	6	5	120	D	20	20	F	99×77×121	ZKS1DF02E1G25	1.4
	25	12	-1	6	5	120	D	20	20	F	99×77×121	ZKS1DF02V1G25	1.4
1 1/4"	32	24	-1	6	5	80	D	57	45	F	112×86.5×150	ZKS1DF02N1H32	2.7
	32	24	-1	6	5	120	D	57	45	F	112×86.5×150	ZKS1DF02E1H32	2.7
	32	24	-1	6	5	120	D	57	45	F	112×86.5×150	ZKS1DF02V1H32	2.7
1 1/2"	32	24	-1	6	5	80	D	57	45	F	120×86.5×160	ZKS1DF02N1J32	2.8
	32	24	-1	6	5	120	D	57	45	F	120×86.5×160	ZKS1DF02E1J32	2.8
	32	24	-1	6	5	120	D	57	45	F	120×86.5×160	ZKS1DF02V1J32	2.8
	40	29	-1	6	5	80	D	57	45	F	123×94×160	ZKS1DF02N1J40	3.2
	40	29	-1	6	5	120	D	57	45	F	123×94×160	ZKS1DF02E1J40	3.2
	40	29	-1	6	5	120	D	57	45	F	123×94×160	ZKS1DF02V1J40	3.2
2"	40	29	-1	6	5	80	D	57	45	F	130×94×175	ZKS1DF02N1K40	3.8
	40	29	-1	6	5	120	D	57	45	F	130×94×175	ZKS1DF02E1K40	3.8
	40	29	-1	6	5	120	D	57	45	F	130×94×175	ZKS1DF02V1K40	3.8
	50	48	-1	6	5	80	D	57	45	F	165×120×176	ZKS1DF02N1K50	5.2
	50	48	-1	6	5	120	D	57	45	F	165×120×176	ZKS1DF02E1K50	5.2
	50	48	-1	6	5	120	D	57	45	F	165×120×176	ZKS1DF02V1K50	5.2

ZKS 2/2-way large diameter direct acting (stainless steel)vacuum solenoid valve · normally closed

1. 2/2-way normally closed, closed when de-energized, open when energized.
2. Body material :SS304 SS316
3. Ambient temp.：0-65℃ Fluid medium：0-120℃
4. Voltage：AC220V/110V230V/240V 50/60Hz
   DC24V/12V, ±10% Voltage Tolerance
5. Seal material：NBR、EPDM、VITON
6. Flow as the arrow, best position is the solenoid vertical and upright direction



Vacuum pipeline connection example

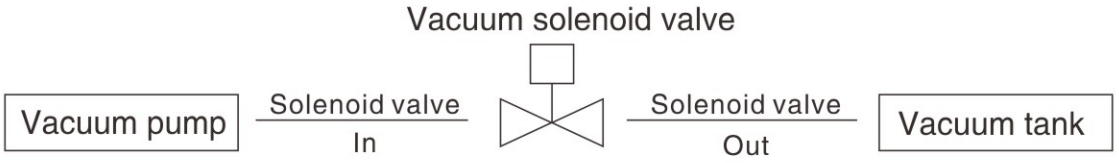

External Dimensions

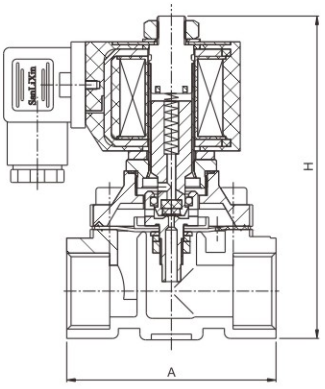

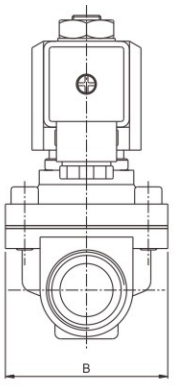

DN15-25mm

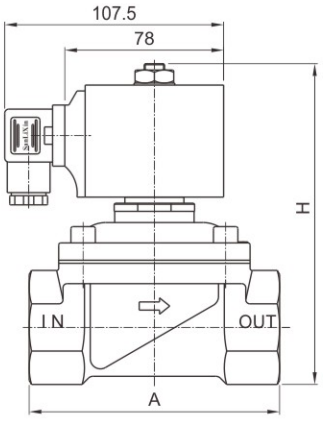

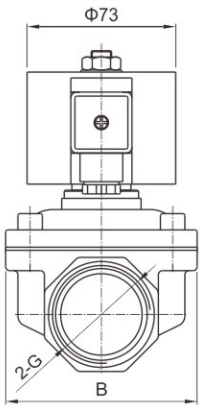

DN32-50mm

ZKS 2/2-way large diameter direct acting (stainless steel)vacuum solenoid valve · normally closed

Valve Selection List

Pipe Conn -ection	Orifice mm	CV Factor	Operating pressure differential (kgf/cm^2)			Min control pressure (kgf/cm^2)	Coil Type	Power		Coil Class	External Dimensions A×B×H	Model Code AC220V	Weight Kg
			Min.	Max. Air				VA	W				
				AC	DC			AC 220V	DC 24V				
3/8"	16	4.8	-1	6	5	80	D	20	20	F	69×57×106	ZKS1DF02N4C16	0.9
	16	4.8	-1	6	5	120	D	20	20	F	69×57×106	ZKS1DF02E4C16	0.9
	16	4.8	-1	6	5	120	D	20	20	F	69×57×106	ZKS1DF02V4C16	0.9
1/2"	16	4.8	-1	6	5	80	D	20	20	F	69×57×106	ZKS1DF02N4D16	0.9
	16	4.8	-1	6	5	120	D	20	20	F	69×57×106	ZKS1DF02E4D16	0.9
	16	4.8	-1	6	5	120	D	20	20	F	69×57×106	ZKS1DF02V4D16	0.9
3/4"	20	7.6	-1	6	5	80	D	20	20	F	73×57×114	ZKS1DF02N4E20	1.08
	20	7.6	-1	6	5	120	D	20	20	F	73×57×114	ZKS1DF02E4E20	1.08
	20	7.6	-1	6	5	120	D	20	20	F	73×57×114	ZKS1DF02V4E20	1.08
1"	20	7.6	-1	6	5	80	D	20	20	F	80×62×117	ZKS1DF02N4G20	1.2
	20	7.6	-1	6	5	120	D	20	20	F	80×62×117	ZKS1DF02E4G20	1.2
	20	7.6	-1	6	5	120	D	20	20	F	80×62×117	ZKS1DF02V4G20	1.2
	25	12	-1	6	5	80	D	20	20	F	99×77×121	ZKS1DF02N4G25	1.4
	25	12	-1	6	5	120	D	20	20	F	99×77×121	ZKS1DF02E4G25	1.4
	25	12	-1	6	5	120	D	20	20	F	99×77×121	ZKS1DF02V4G25	1.4
11/4"	32	24	-1	6	5	80	D	57	45	F	112×86.5×150	ZKS1DF02N4H32	2.7
	32	24	-1	6	5	120	D	57	45	F	112×86.5×150	ZKS1DF02E4H32	2.7
	32	24	-1	6	5	120	D	57	45	F	112×86.5×150	ZKS1DF02V4H32	2.7
11/2"	32	24	-1	6	5	80	D	57	45	F	120×86.5×160	ZKS1DF02N4J32	2.8
	32	24	-1	6	5	120	D	57	45	F	120×86.5×160	ZKS1DF02E4J32	2.8
	32	24	-1	6	5	120	D	57	45	F	120×86.5×160	ZKS1DF02V4J32	2.8
	40	29	-1	6	5	80	D	57	45	F	123×94×160	ZKS1DF02N4J40	3.2
	40	29	-1	6	5	120	D	57	45	F	123×94×160	ZKS1DF02E4J40	3.2
	40	29	-1	6	5	120	D	57	45	F	123×94×160	ZKS1DF02V4J40	3.2
2"	40	29	-1	6	5	80	D	57	45	F	130×94×175	ZKS1DF02N4K40	3.8
	40	29	-1	6	5	120	D	57	45	F	130×94×175	ZKS1DF02E4K40	3.8
	40	29	-1	6	5	120	D	57	45	F	130×94×175	ZKS1DF02V4K40	3.8
	50	48	-1	6	5	80	D	57	45	F	165×120×176	ZKS1DF02N4K50	5.2
	50	48	-1	6	5	120	D	57	45	F	165×120×176	ZKS1DF02E4K50	5.2
	50	48	-1	6	5	120	D	57	45	F	165×120×176	ZKS1DF02V4K50	5.2

ZKS 2/2-way large diameter direct acting (stainless steel)vacuum solenoid valve normally closed

1. 2/2-way normally closed, closed when -de-energized, open when energized.
2. Body material :SS304 SS316
3. Ambient temp.: 0-65℃ Fluid medium：0-120℃
4. Voltage：AC220V/110V230V/240V 50/60Hz DC24V/12V, ±10% Voltage Tolerance
5. Seal material: NBR、EPDM、VITON
6. Flow as the arrow, best position is the solenoid vertical and upright direction



Valve Selection List (Flange interface)

Orifice mm	CV Factor	Operating pressure differential (kgf/cm^2) Min.	Max. Air AC	Max. Air DC	Max. fluids Temp. ℃	Coil Type	Power VA AC 220V	Power W DC 24V	Coil Class	Model Code AC220V	Weight Kg
15	4.8	-1	6	5	80	D	20	20	F	ZKS1DF02N4F15	1.8
15	4.8	-1	6	5	120	D	20	20	F	ZKS1DF02E4F15	1.8
15	4.8	-1	6	5	120	D	20	20	F	ZKS1DF02V4F15	1.8
20	7.6	-1	6	5	80	D	20	20	F	ZKS1DF02N4F20	2.0
20	7.6	-1	6	5	120	D	20	20	F	ZKS1DF02E4F20	2.0
20	7.6	-1	6	5	120	D	20	20	F	ZKS1DF02V4F20	2.0
25	12	-1	6	5	80	D	20	20	F	ZKS1DF02N4F25	2.9
25	12	-1	6	5	120	D	20	20	F	ZKS1DF02E4F25	2.9
25	12	-1	6	5	120	D	20	20	F	ZKS1DF02V4F25	2.9
32	24	-1	6	5	80	D	57	45	F	ZKS1DF02N4F32	5.1
32	24	-1	6	5	120	D	57	45	F	ZKS1DF02E4F32	5.1
32	24	-1	6	5	120	D	57	45	F	ZKS1DF02V4F32	5.1
40	29	-1	6	5	80	D	57	45	F	ZKS1DF02N4F40	6.1
40	29	-1	6	5	120	D	57	45	F	ZKS1DF02E4F40	6.1
40	29	-1	6	5	120	D	57	45	F	ZKS1DF02V4F40	6.1
50	48	-1	6	5	80	D	57	45	F	ZKS1DF02N4F50	8.2
50	48	-1	6	5	120	D	57	45	F	ZKS1DF02E4F50	8.2
50	48	-1	6	5	120	D	57	45	F	ZKS1DF02V4F50	8.2

Flange series External Dimensions

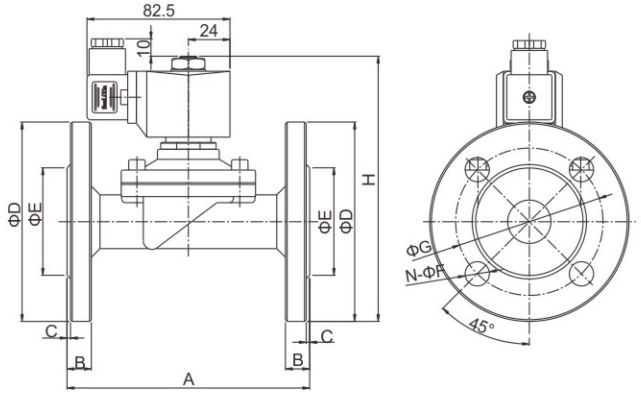

型号	A	B	C	ΦD	ΦE	N-ΦF	ΦG	H
ZKS-15BF	106	12	2	95	45	4-14	65	138
ZKS-20BF	106	12	2	102	56	4-14	75	141
ZKS-25BF	140	14	2	115	62	4-14	85	160
ZKS-32BF	152	15	2	135	76	4-18	100	215
ZKS-40BF	152	15	2	145	84	4-18	110	215
ZKS-50BF	195	16	2	160	98	4-18	125	220

STJF series proportional valve

1. 2-way normally closed proportional valve, Wide Linear ControlRange, Cleaned for Oxygen Service
2. Body Material: Brass, Stainless steel
3. Ambient temp.: -10- -60C
4. Voltage: DC24V. DC12V - -5%~+ 10% Voltage tolerance
5. Media: Air, Oxygen, water and other medical gases.
6. PWM: 300HZ~350HZ
7. Pipe size: 1/8"~1/4"
8. Hysteresis: <8%, Repeatability: <5%
9. We advise the valve to use with the PWM & Sensor
10. This series solenoid valve match with UL & CE





Solenoid valve model numbering system for order

	1	2	3	4	5	6	7	8	9	10
	Valve Series	Mode of Operation	Coil Type	Coil Class	Voltage	Seal Material	Body material	Pipe size	Orifice (mm)	Options
E.G.	**STJF**	**1**	**D**	**H**	**13**	**V**	**1**	**A**	**02**	□
		1:Normally Closed	D=DIN standard connections, fully encapsulated	H= H Class	13= DC24 12= DC12V	V=VITON N=NBR	1= Forged Brass 3= SS316 9= Brass	A=1/8" B=1/4" M= Plate type	01=1.0 C1=1.2 C2=1.5 02=2.0 C3=2.5 03=3.0 04=4.0	N=NPT Thread L=Neon Lamp Bland is G thread

External Dimensions

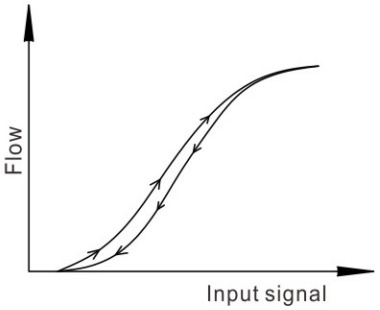

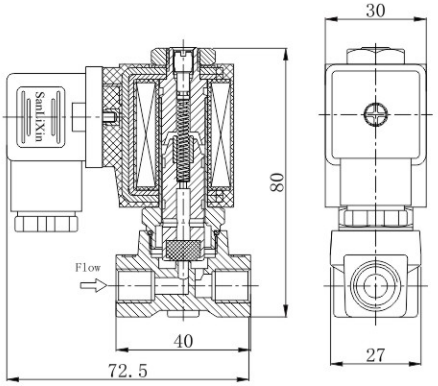

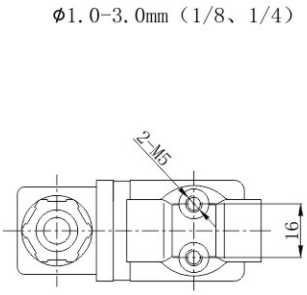

STJF series proportional valve

External Dimensions

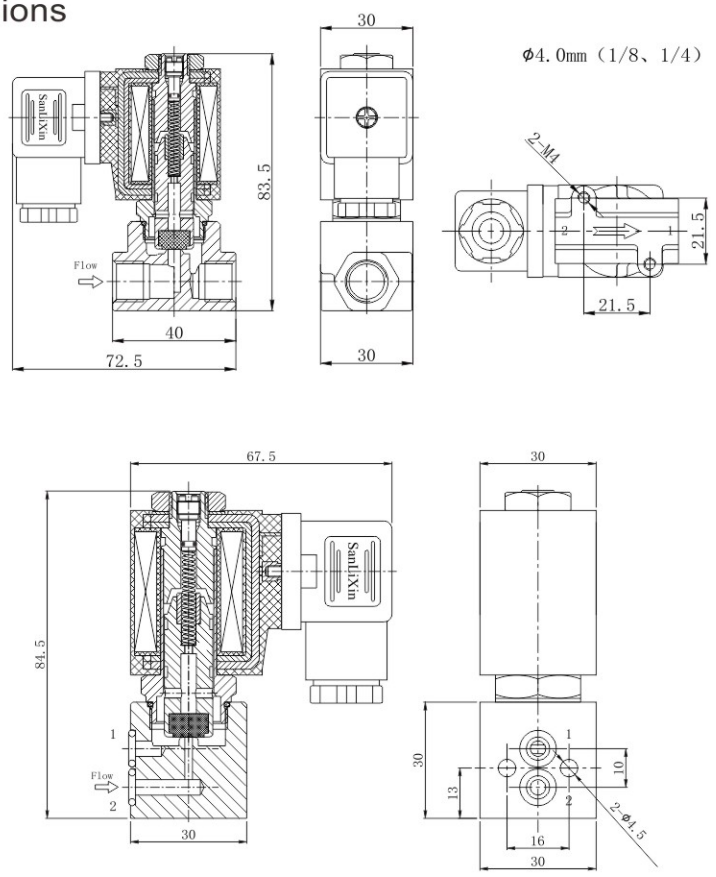

Body: 9

Valve Selection List

Pipe Conn -ection	Orifice mm	CV Factor	Operating pressure differential (kgf/cm²)		Coil Type	Coil Class	Power W	Max. fluids Temp. ℃	Model Code Follows Voltage are DC 24V The sealing materialis Viton		Weight Kg
			Min.	Max.			DC 24V		Forged Brass	Stainless Steel	
1/8"	1.0	0.04	0	10	D	H	17	80	STJF1DH13V1A01	STJF1DH13V3A01	0.4
	1.2	0.05	0	8	D	H	17	80	STJF1DH13V1AC1	STJF1DH13V3AC1	0.4
	1.5	0.08	0	8	D	H	17	80	STJF1DH13V1AC2	STJF1DH13V3AC2	0.4
	2.0	0.14	0	6	D	H	17	80	STJF1DH13V1A02	STJF1DH13V3A02	0.4
	2.5	0.23	0	4	D	H	17	80	STJF1DH13V1AC3	STJF1DH13V3AC3	0.4
	3.0	0.25	0	3	D	H	17	80	STJF1DH13V1A03	STJF1DH13V3A03	0.4
	4.0	0.4	0	2	D	H	17	80	STJF1DH13V1A04	STJF1DH13V3A04	0.45
1/4"	1.0	0.04	0	10	D	H	17	80	STJF1DH13V1B01	STJF1DH13V3B01	0.39
	1.2	0.05	0	8	D	H	17	80	STJF1DH13V1BC1	STJF1DH13V3BC1	0.39
	1.5	0.08	0	8	D	H	17	80	STJF1DH13V1BC2	STJF1DH13V3BC2	0.39
	2.0	0.14	0	6	D	H	17	80	STJF1DH13V1B02	STJF1DH13V3B02	0.39
	2.5	0.23	0	4	D	H	17	80	STJF1DH13V1BC3	STJF1DH13V3BC3	0.39
	3.0	0.25	0	3	D	H	17	80	STJF1DH13V1B03	STJF1DH13V3B03	0.39
	4.0	0.4	0	2	D	H	17	80	STJF1DH13V1B04	STJF1DH13V3B04	0.44

STJS 2/2-way flow adjustable direct-acting solenoid valve · normally closed

1. 2/2-way normally closed solenoid valve,Closed when de-energized, open when energized.
2. The products are produced in series and are small in size. The flow rate can be adjusted by adjusting the knob to meet the needs of non-stop flow.
3. This series of solenoid valves are small in size, large in flow, easy to operate and have a wide range of applications.
4. Body material: brass
5. Ambient temp.:0℃~65℃
6. Medium temperature：0℃~120℃
7. Voltage: AC24V/110V/220V/230V/240V 50/60Hz

   DC24V/12V ±10% allowed
8. Seal material: NBR. VITON EPDM etc
9. diameter：DN2-5.0mm

Flow as the arrow,mounts in any position, Best position is solenoid certical and upright direction.



Normally Closed **De-energized**
Closed

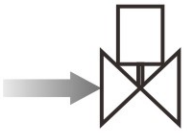

Energized
Open



Solenoid valve model numbering system for order

1	2	3	4	5	6	7	8	9	10
Valve Series	Mode of Operation	Coil Type	Coil Class	Voltage	Seal Material	Body material	Pipe size	Orifice (mm)	Options
STJS	**1**	**D**	**F**	**02**	**N**	**1**	**B**	**02**	□
STJS	1= Normally Closed	D= DIN Standard Connections, Fully Encapsulated N= Lead Wires, Water-tight, Fully Encapsulated U= Underwater coil M= SM coil	F=F Class	02= AC220V AC230V 01= AC110V AC120V 05= AC24V 12= DC12V 13= DC24V For other voltages, please consult the company	N=NBR E=EPDM V=VITON	1= Brass	A=1/8" B=1/4"	02=2.0 C3=2.5 03=3.0 04=4.0 05=5.0	N=NPT L= Neon Lamp

STJS 2/2-way flow adjustable direct-acting solenoid valve · normally closed

External Dimensions

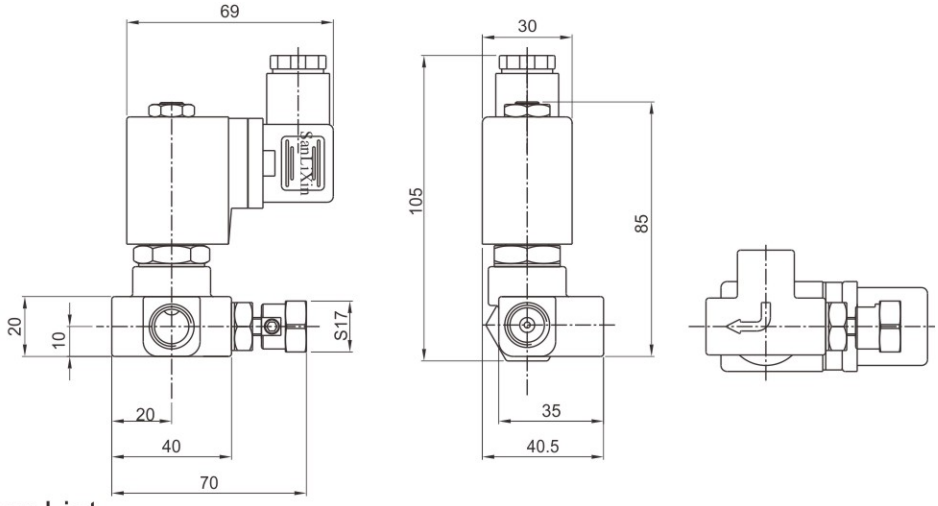

Valve Selection List

Pipe Conn -ection	Orifice mm	CV Factor	Operating pressure differential (kgf/cm^2) Min.	Max. Air Gas AC	Max. Air Gas DC	Max. water, hot water liquid AC	Max. water, hot water liquid DC	Max. light oil ≤ 20CST AC	Max. light oil ≤ 20CST DC	Max. fluids Temp. ℃	Coil Type	Power VA AC 220V	Power W DC 24V	Coil Class	Model Code AC220V	Weight Kg
1/8 "	2.0	0.14	0	25	25	25	25	20	20	80	D	22	13	F	STJS1DF02N1A02	0.50
	2.0	0.14	0	25	25	25	25			120	D	22	13	F	STJS1DF02E1A02	0.50
	2.0	0.14	0	25	25	25	25	20	20	120	D	22	13	F	STJS1DF02V1A02	0.50
	2.5	0.23	0	20	20	20	20	15	15	80	D	22	13	F	STJS1DF02N1AC3	0.50
	2.5	0.23	0	20	20	20	20			120	D	22	13	F	STJS1DF02E1AC3	0.50
	2.5	0.23	0	20	20	20	20	15	15	120	D	22	13	F	STJS1DF02V1AC3	0.50
	3.0	0.30	0	13	13	13	13	10	10	80	D	22	13	F	STJS1DF02N1A03	0.50
	3.0	0.30	0	13	13	13	13			120	D	22	13	F	STJS1DF02E1A03	0.50
	3.0	0.30	0	13	13	13	13	10	10	120	D	22	13	F	STJS1DF02V1A03	0.50
	4.0	0.60	0	8	8	8	8	6	6	80	D	22	13	F	STJS1DF02N1A04	0.50
	4.0	0.60	0	8	8	8	8			120	D	22	13	F	STJS1DF02E1A04	0.50
	4.0	0.60	0	8	8	8	8	6	6	120	D	22	13	F	STJS1DF02V1A04	0.50
	5.0	0.65	0	6	6	6	6	4	4	80	D	22	13	F	STJS1DF02N1A05	0.50
	5.0	0.65	0	6	6	6	6			120	D	22	13	F	STJS1DF02E1A05	0.50
	5.0	0.65	0	6	6	6	6	4	4	120	D	22	13	F	STJS1DF02V1A05	0.50
1/4 "	2.0	0.14	0	25	25	25	25	20	20	80	D	22	13	F	STJS1DF02N1B02	0.45
	2.0	0.14	0	25	25	25	25			120	D	22	13	F	STJS1DF02E1B02	0.45
	2.0	0.14	0	25	25	25	25	20	20	120	D	22	13	F	STJS1DF02V1B02	0.45
	2.5	0.23	0	20	20	20	20	15	15	80	D	22	13	F	STJS1DF02N1BC3	0.45
	2.5	0.23	0	20	20	20	20			120	D	22	13	F	STJS1DF02E1BC3	0.45
	2.5	0.23	0	20	20	20	20	15	15	120	D	22	13	F	STJS1DF02V1BC3	0.45
	3.0	0.30	0	13	13	13	13	10	10	80	D	22	13	F	STJS1DF02N1B03	0.45
	3.0	0.30	0	13	13	13	13			120	D	22	13	F	STJS1DF02E1B03	0.45
	3.0	0.30	0	13	13	13	13	10	10	120	D	22	13	F	STJS1DF02V1B03	0.45
	4.0	0.60	0	8	8	8	8	6	6	80	D	22	13	F	STJS1DF02N1B04	0.45
	4.0	0.60	0	8	8	8	8			120	D	22	13	F	STJS1DF02E1B04	0.45
	4.0	0.60	0	8	8	8	8	6	6	120	D	22	13	F	STJS1DF02V1B04	0.45
	5.0	0.65	0	6	6	6	6	4	4	80	D	22	13	F	STJS1DF02N1B05	0.45
	5.0	0.65	0	6	6	6	6			120	D	22	13	F	STJS1DF02E1B05	0.45
	5.0	0.65	0	6	6	6	6	4	4	120	D	22	13	F	STJS1DF02V1B05	0.45

SLOW series water hammer resist solenoid valve · normally closed

1.2/2-way normally closed solenoid valve,Closed when de-energized, open when energized.

2. This solenoid valve closed slowly. can solve the water hammer the problem.

3. Body material: Brass SS304

4. Pressure resistance: 20kgf/cm²

   Ambient temp.: 0℃~65℃

5. Voltage: AC24V/110V/220V/230V/240V 50/60Hz

   DC24V/12V ±10% allowed

6. Seal material: NBR. VITON EPDM etc

Flow as the arrow,mounts in any position, Best position is solenoid certical and upright direction.





Solenoid valve model numbering system for order

1	2	3	4	5	6	7	8	9	10
Valve Series	Mode of Operation	Coil Type	Coil Class	Voltage	Seal Material	Body material	Pipe size	Orifice (mm)	Options
SLOW	**1**	**D**	**F**	**02**	**N**	**1**	**D**	**02**	□
SLOW	1= Normally Closed	D= DIN Standard Connections, Fully Encapsulated	F= F Class	02= AC220V AC230V 01= AC110V AC120V 12=DC12V 13=DC24V	N=NBR E=EPDM V=VITON	1= Forged Brass 4= SS304	C=3/8" D=1/2" E=3/4" G=1" J=1 1/2"	16=16.0 20=20.0 25=25.0 40=40.0	N=NPT L= Neon Lamp

SLOW series water hammer resist solenoid valve · normally closed

Valve Selection List

Pipe Conn -ection	Orifice mm	CV Factor	Operating pressure differential (kgf/cm²)			Coil Type	Power		Coil Class	External Dimensions Length x Width x Height Ax B x H	Model Code AC220V		Weight Kg
			Min.	Max.			VA	W					
				Gas	Liquid		AC 220 V	DC 24 V			Forged Brass	SS304	
3/8 "	16	4.8	0.5	10	10	D	22	13	F	69 × 81 × 125	SLOW1DF02N1C16	SLOW1DF02N4C16	1.0
	16	4.8	0.5	10	10	D	22	13	F	69 × 81 × 125	SLOW1DF02E1C16	SLOW1DF02E4C16	1.0
	16	4.8	0.5	10	10	D	22	13	F	69 × 81 × 125	SLOW1DF02V1C16	SLOW1DF02V4C16	1.0
1/2 "	16	4.8	0.5	10	10	D	22	13	F	69 × 81 × 125	SLOW1DF02N1D16	SLOW1DF02N4D16	1.0
	16	4.8	0.5	10	10	D	22	13	F	69 × 81 × 125	SLOW1DF02E1D16	SLOW1DF02E4D16	1.0
	16	4.8	0.5	10	10	D	22	13	F	69 × 81 × 125	SLOW1DF02V1D16	SLOW1DF02V4D16	1.0
3/4 "	20	7.6	0.5	10	10	D	22	13	F	71 × 81 × 129	SLOW1DF02N1E20	SLOW1DF02N4E20	1.2
	20	7.6	0.5	10	10	D	22	13	F	71 × 81 × 129	SLOW1DF02E1E20	SLOW1DF02E4E20	1.2
	20	7.6	0.5	10	10	D	22	13	F	71 × 81 × 129	SLOW1DF02V1E20	SLOW1DF02V4E20	1.2
G1 "	25	12	0.5	10	10	D	22	13	F	95 × 87 × 52	SLOW1DF02N1G25	SLOW1DF02N4G25	1.4
	25	12	0.5	10	10	D	22	13	F	95 × 87 × 52	SLOW1DF02E1G25	SLOW1DF02E4G25	1.4
	25	12	0.5	10	10	D	22	13	F	95 × 87 × 52	SLOW1DF02V1G25	SLOW1DF02V4G25	1.4
1 1/2 "	40	29	0.5	10	10	D	22	13	F	111 × 99 × 163	SLOW1DF02N1J40	SLOW1DF02N4J40	2.9
	40	29	0.5	10	10	D	22	13	F	111 × 99 × 163	SLOW1DF02E1J40	SLOW1DF02E4J40	2.9
	40	29	0.5	10	10	D	22	13	F	111 × 99 × 163	SLOW1DF02V1J40	SLOW1DF02V4J40	2.9

External Dimensions

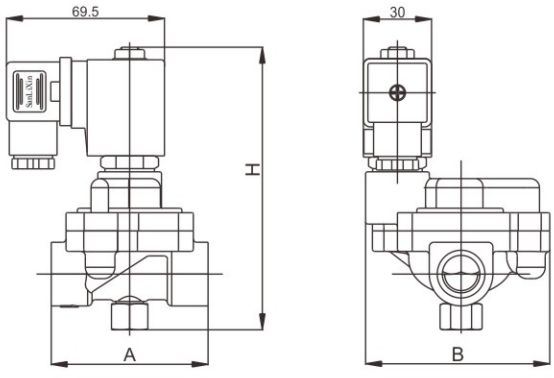

DN15-20mm

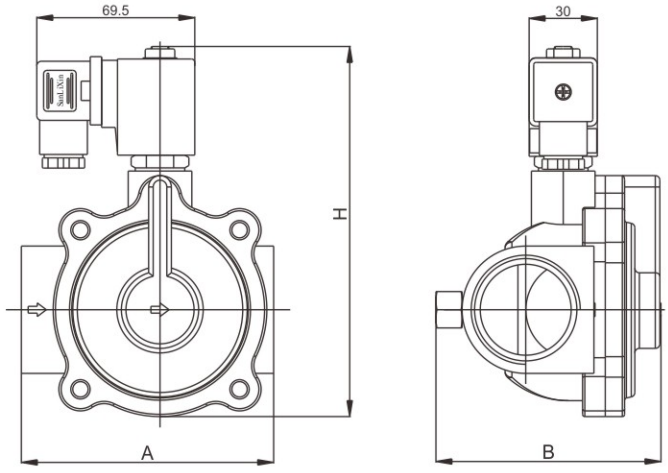

DN25-40mm

SLPK Clamp connect pilot operated diaphragm Solenoid valve · normally closed

1.2/2-way normally closed solenoid valve,Closed when de-energized, open when energized.

2.This solenoid valve is clamp connect. zero leak. easy to install it.

3.Body material:Stainless steel

4.Ambient temp:0℃~65℃

5.Voltage:AC220/230V/240V/110V/240V 50/60HZ
DC24V/12V ±10%

6.Seal materia:NBR、VITON、EPDM etc

Flow as the arrow,mounts in any position, Best position is solenoid certical and upright direction.



Solenoid Valves Numbering System for Order

1	2	3	4	5	6	7	8	9	10
Valve Series	Mode of Operation	Coil Type	Coil Class	Voltage	Seal Material	Body Material	Pipe Size	Orifice (ϕ mm)	Options
SLPK	**1**	**D**	**F**	**02**	**N**	**3**	**Q**	**20**	☐
	1: Normally Closed 2: Normally Open	D: DIN Standard Connections, Fully Encapsulated N: Lead Wires, Water-tight, Fully Encapsulated	F= F Class	02= AC220V AC230V 01= AC110V AC120V1 12=DC12V 13=DC24V	N=NBR V=VITON E=EPDM	3= SS316	Q= Clamp connection	15=15.0 20=20.0 25=25.0 32=32.0 40=40.0 50=50.0	L= Neon Lamp

SLPK Clamp connect pilot operated diaphragm Solenoid valve · normally closed

Valve Selection List

Orifice mm	CV Factor	Operating pressure differential (kgf/cm²) Min.	Max. Gas	Max. Liquid	Coil Type	Power VA AC 220 V	Power W DC 24 V	Coil Class	Model Code AC220V Forged Brass	Model Code AC220V SS304	Weight Kg
DN15	4.5	0.5	16	16	D	22	13	F	102 × 50.5 × 118	SLPK1DF02N3Q15	0.9
	4.5	0.5	16	16	D	22	13	F	102 × 50.5 × 118	SLPK1DF02EQ15	0.9
	4.5	0.5	16	16	D	22	13	F	102 × 50.5 × 118	SLPK1DF02V3Q15	0.9
DN20	7.6	0.5	16	16	D	22	13	F	118 × 58 × 121	SLPK1DF02N3Q20	1.0
	7.6	0.5	16	16	D	22	13	F	118 × 58 × 121	SLPK1DF02E3Q20	1.0
	7.6	0.5	16	16	D	22	13	F	118 × 58 × 121	SLPK1DF02V3Q20	1.0
DN25	12	0.5	16	16	D	22	13	F	139 × 70 × 127	SLPK1DF02N3Q25	1.3
	12	0.5	16	16	D	22	13	F	139 × 70 × 127	SLPK1DF02E3Q25	1.3
	12	0.5	16	16	D	22	13	F	139 × 70 × 127	SLPK1DF02V3Q25	1.3
DN32	22	0.5	16	16	D	22	13	F	176 × 96 × 144	SLPK1DF02N3Q32	1.8
	22	0.5	16	16	D	22	13	F	176 × 96 × 144	SLPK1DF02E3Q32	1.8
	22	0.5	16	16	D	22	13	F	176 × 96 × 144	SLPK1DF02V3Q32	1.8
DN40	30	0.5	16	16	D	22	13	F	176 × 96 × 144	SLPK1DF02N3Q40	2.4
	30	0.5	16	16	D	22	13	F	176 × 96 × 144	SLPK1DF02E3Q40	2.4
	30	0.5	16	16	D	22	13	F	176 × 96 × 144	SLPK1DF02V3Q40	2.4
DN50	48	0.5	16	16	D	22	13	F	200 × 120 × 160	SLPK1DF02N3Q50	4.4
	48	0.5	16	16	D	22	13	F	200 × 120 × 160	SLPK1DF02E3Q50	4.4
	48	0.5	16	16	D	22	13	F	200 × 120 × 160	SLPK1DF02V3Q50	4.4

External Dimensions

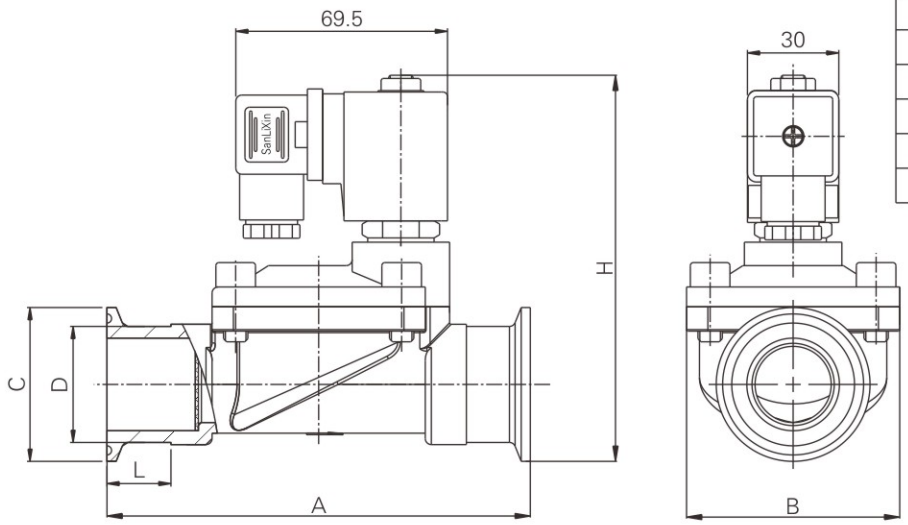

Orifice	A	B	H	C	D	L
DN15	102	50.5	118	Φ50.5	Φ24.5	21
DN20	118	50.5	121	Φ50.5	Φ31.8	21
DN25	139	70	127	Φ50.5	Φ38.1	21
DN32	176	96	144	Φ64	Φ48	23.5
DN40	176	96	144	Φ64	Φ50.5	23.5
DN50	200	120	160	Φ77.5	Φ60	30

ZSK Clamp connect 2/2-way Solenoid valve · normally closed

2/2-way normally closed solenoid valve,Closed when de-energized, open when energized.
This solenoid valve is a clamp-type connection, with good sealing performance and simple installation.

Body material：304SS

Pressure resistance: 0~10kgf/cm²

Ambient temp：0℃~65℃

Voltage： AC220/230V/240V/110V/240V 50/60HZ
DC24V/12V ±10% allowed

Seal materia：NBR、VITON、EPDM、Silicone

Flow as the arrow,mounts in any position, Best position is solenoid certical and upright direction.



Solenoid Valves Numbering System for Order

1	2	3	4	5	6	7	8	9	10
Valve Series	Mode of Operation	Coil Type	Coil Class	Voltage	Seal Material	Body Material	Pipe Size	Orifice (ϕ mm)	Options
ZSK	1	D	F	02	G	4	Q	20	□
	1: Normally Closed	A=Metallic Housing DIN standard D: DIN Standard Connections, Fully Encapsulated N: Lead Wires, Water–tight, Fully Encapsulated	F= F Class	02= AC220V AC230V 01= AC110V AC120V1 12=DC12V 13=DC24V	N=NBR V=VITON E=EPDM G=Silicone	4= SS304 3= SS316	Q= Clamp connection	15=15.0 20=20.0 25=25.0 32=32.0 40=40.0 50=50.0	L= Neon Lamp

ZSK Clamp connect 2/2-way Solenoid valve · normally closed

Valve Selection List

Orifice mm	CV Factor	Operating pressure differential (kgf/cm²)			Coil Type	Power		Coil Class	Model Code AC220V	Weight Kg
		Min.	Max.			VA	W			
			AC	DC		AC 220 V	DC 24 V			
DN15	4.8	0	10	6	D	20	20	F	ZSK1DF02N4Q15	0.9
	4.8	0	10	6	D	20	20	F	ZSK1DF02E4Q15	0.9
	4.8	0	10	6	D	20	20	F	ZSK1DF02V4Q15	0.9
DN20	7.6	0	10	6	D	20	20	F	ZSK1DF02N4Q20	1.0
	7.6	0	10	6	D	20	20	F	ZSK1DF02E4Q20	1.0
	7.6	0	10	6	D	20	20	F	ZSK1DF02V4Q20	1.0
DN25	12	0	10	6	D	33	25	F	ZSK1DF02N4Q25	1.4
	12	0	10	6	D	33	25	F	ZSK1DF02E4Q25	1.4
	12	0	10	6	D	33	25	F	ZSK1DF02V4Q25	1.4
DN32	25	0	10	6	D	57	45	F	ZSK1DF02N4Q32	2.1
	25	0	10	6	D	57	45	F	ZSK1DF02E4Q32	2.1
	25	0	10	6	D	57	45	F	ZSK1DF02V4Q32	2.1
DN40	32	0	10	6	D	57	45	F	ZSK1DF02N4Q40	2.6
	32	0	10	6	D	57	45	F	ZSK1DF02E4Q40	2.6
	32	0	10	6	D	57	45	F	ZSK1DF02V4Q40	2.6
DN50	50	0	10	6	D	57	45	F	ZSK1DF02N4Q50	4.1
	50	0	10	6	D	57	45	F	ZSK1DF02E4Q50	4.1
	50	0	10	6	D	57	45	F	ZSK1DF02V4Q50	4.1

ZSK Clamp connect 2/2-way Solenoid valve · normally closed

DN15-25

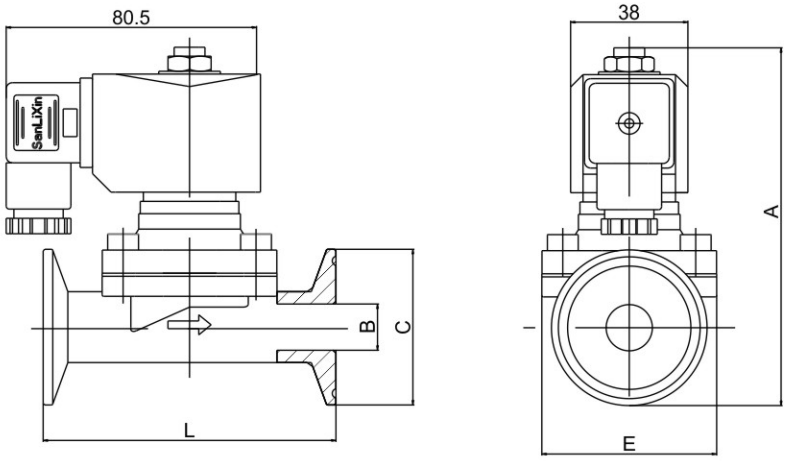

DN32-50

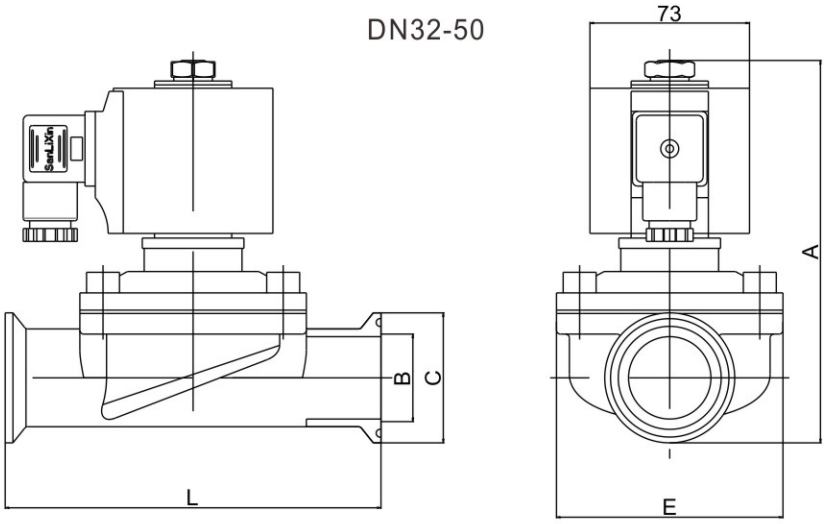

No.	B	C	L mm	A mm	E mm
DN15	ϕ15	Φ50.5	95	116	57
DN20	ϕ20	Φ50.5	95	118	57
DN25	ϕ25	Φ50.5	139	120	77.5
DN32	ϕ32	Φ50.5	146	149	88
DN40	ϕ40	Φ64	154	159	94
DN50	ϕ50	Φ77.5	204	180	123

SLR-5 2/4-way direct acting solenoid valve

1.2/4-way direct acting solenoid valve，can change the flow direction
2.Simple construction, widely used. stable performance
3.Body material：Brass
4.Ambient temp：0℃～65℃
5.Voltage：AC220V/50Hz DC24V ±10%
6.Seal material：VITON
7.Medium：Gas,Liquid Viscosity:<20CST
8.Connect size：1/4、3/8
Flow as the arrow, mounts in any position, Best position is solenoid vertical and upright direction.



Working principle：

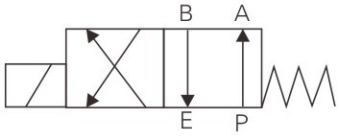

P=inport E=outport
De-energized: P→A B→E
Energized: P→B A→B

Solenoid Valves Numbering System for Order

1	2	3	4	5	6	7	8	9	10
Valve Series	Mode of Operation	Coil Type	Coil Class	Voltage	Seal Material	Body Material	Pipe Size	Orifice (ϕ mm)	Options
SLR	3	D	F	02	V	1	C	05	□
	3= Divert	D: DIN Standard Connections, Fully Encapsulated	F= F Class	02= AC220V 13=DC24V	V=VITON	1= Forged Brass	B=1/4 C=3/8	05=5.0	N=NPT

SLR-5 2/4-way direct acting solenoid valve

External Dimensions

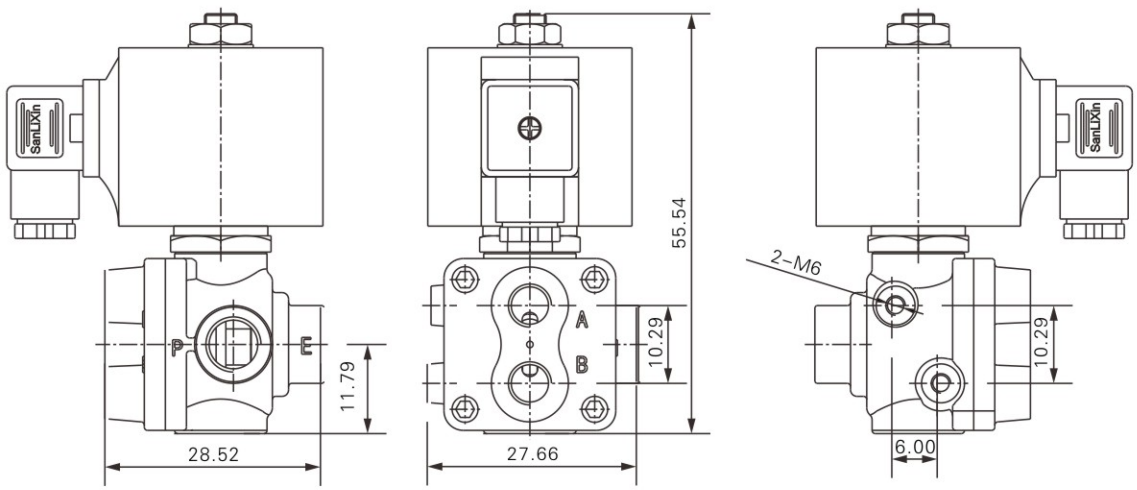

Valve Selection List

Pipe Conn -ection	Orifice mm	CV Factor	Operating pressure differential (kgf/cm²)			Max. fluids Temp. ℃	Coil Type	Coil Class	Power		Model Code 220VAC	Weight (KG)
			Min.	Max.					VA AC 220V	W DC 24V		
				Air	Water							
1/4	5.0	0.65	0	9	7	120	D	F	57	45	SLR3DF02V1B05	1.8
3/8	5.0	0.65	0	9	7	120	D	F	57	45	SLR3DF02V1C05	

SWXF series mini power solenovid valve · normally closed

1.2/2-way normally closed solenoid valve,Closed when de-energized, open when energized.

2. Characteristic: low power, small in size, easy integration, can be used in medical, pharmaceutical, analytical instruments and other industries widely.

3. Body material: SS316

4. Ambient temp.:0C~65%C

5. Voltage: DC24V. DC12V ±10% allowed

6. Seal material: NBR. VITON EPDM etc

7. Medium: Neutral fluid, viscosity:<20CST

8. Connect size: M6 1/8"

9. Coil connection mode: lead type (length: 350mm)

10.Flow as the arrow, mounts in any position, Best position is solenoid vertical and upright direction.



Solenoid Valves Numbering System for Order

Position description	1	2	3	4	5	6	7	8	9	10
	Valve Series	Mode of Operation	Coil Type	Coil Class	Voltage	Seal Material	Body Material	Pipe Size	Orifice (ϕ mm)	Options
E.G.	SWXF	1	W	H	13	V	3	M	02	□
		1: Normally Closed	W: Metallic Housing, Lead wires	H= H Class	12=DC12V 13=DC24V	N=NBR V=VITON E=EPDM	3= SS316	M=M6 A=1/8"	01=1.0 C1=1.2 C2=1.5 02=2.0	N=NPT Connection

SWXF series mini power solenovid valve · normally closed

External Dimensions

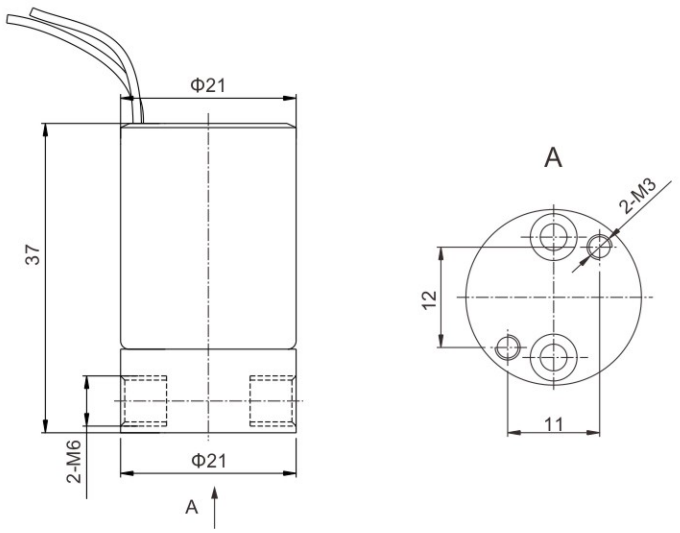

Valve Selection List

Pipe Conn -ection	Orifice mm	CV Factor	Operating pressure differential (kgf/cm²)		Max. fluids Temp. ℃	Coil Type	Coil Class	Power W	Model Code AC220V	Weight KG
			Min.	Max.						
M6	1.0	0.04	0	10	80	W	H	2.8	SWXF1WH13N3M01	0.08
	1.0	0.04	0	10	120	W	H	2.8	SWXF1WH13E3M01	
	1.0	0.04	0	10	120	W	H	2.8	SWXF1WH13V3M01	
M6	1.2	0.05	0	10	80	W	H	2.8	SWXF1WH13N3MC1	
	1.2	0.05	0	10	120	W	H	2.8	SWXF1WH13E3MC1	
	1.2	0.05	0	10	120	W	H	2.8	SWXF1WH13V3MC1	
M6	1.5	0.08	0	8	80	W	H	2.8	SWXF1WH13N3MC2	
	1.5	0.08	0	8	120	W	H	2.8	SWXF1WH13E3MC2	
	1.5	0.08	0	8	120	W	H	2.8	SWXF1WH13V3MC2	
M6	2.0	0.14	0	6	80	W	H	2.8	SWXF1WH13N3M02	
	2.0	0.14	0	6	120	W	H	2.8	SWXF1WH13E3M02	
	2.0	0.14	0	6	120	W	H	2.8	SWXF1WH13V3M02	

SWXF series mini power solenovid valve · normally closed

External Dimensions

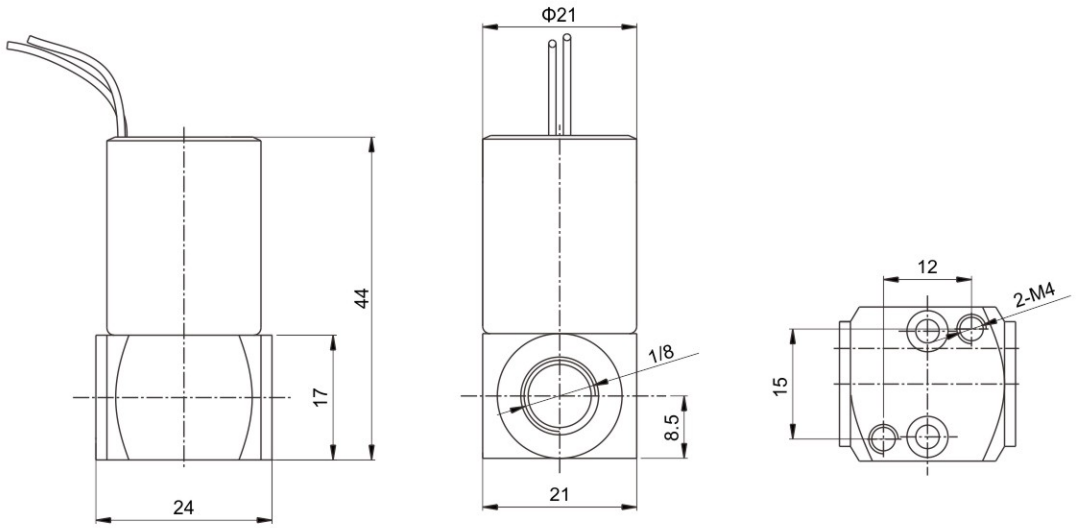

Valve Selection List

Pipe Conn -ection	Orifice mm	CV Factor	Operating pressure differential (kgf/cm²)		Max. fluids Temp. ℃	Coil Type	Coil Class	Power W	Model Code AC220V NPT	Weight KG
			Min.	Max.						
1/8	1.0	0.04	0	10	80	W	H	2.8	SWXF1WH13N3A01N	0.1
	1.0	0.04	0	10	120	W	H	2.8	SWXF1WH13E3A01N	
	1.0	0.04	0	10	120	W	H	2.8	SWXF1WH13V3A01N	
1/8	1.2	0.05	0	10	80	W	H	2.8	SWXF1WH13N3AC1N	
	1.2	0.05	0	10	120	W	H	2.8	SWXF1WH13E3AC1N	
	1.2	0.05	0	10	120	W	H	2.8	SWXF1WH13V3AC1N	
1/8	1.5	0.08	0	8	80	W	H	2.8	SWXF1WH13N3AC2N	
	1.5	0.08	0	8	120	W	H	2.8	SWXF1WH13E3AC2N	
	1.5	0.08	0	8	120	W	H	2.8	SWXF1WH13V3AC2N	
1/8	2.0	0.14	0	6	80	W	H	2.8	SWXF1WH13N3A02N	
	2.0	0.14	0	6	120	W	H	2.8	SWXF1WH13E3A02N	
	2.0	0.14	0	6	120	W	H	2.8	SWXF1WH13V3A02N	

SWXV 3/2-way miniature direct acting solenoid valve

1. Main features: low power, small size, easy integration, can be widely used in medical, pharmaceutical, analytical instruments and other industries
2. Body material: SS316
3. Ambient temperature: 0 ° C to 65 ° C
4. Coil voltage: DC24V, DC12V, etc., ±10% allowed
5. Seal material: can be used NBR, VITON, EPDM and other kinds of seal
6. Medium: neutral fluid, fluid viscosity: less than 20CST
7. body connection: M6
8. Coil connection type: lead type (length 350mm)

Flow as the arrow,mounts in any position, Best position is solenoid certical and upright direction.



Solenoid Valves Numbering System for Order

Position description	1	2	3	4	5	6	7	8	9	10
	Valve Series	Mode of Operation	Coil Type	Coil Class	Voltage	Seal Material	Body Material	Pipe Size	Orifice (ϕ mm)	Options
E.G.	SWXV	1	W	H	13	V	3	M	02	□
		1: Normally closed 2: Normally open 3: Diverting 4: Universal	W: Metallic Housing, Lead wires	H= H Class	12=DC12V 13=DC24V	N=NBR V=VITON E=EPDM	3= SS316	M=M6 A=1/8"	C2=1.5 02=2.0	N=NPT Connection

External Dimensions

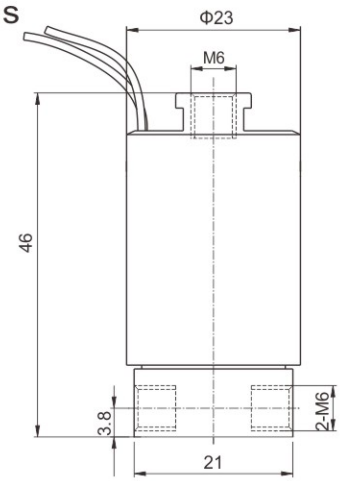

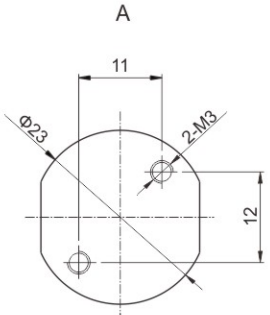

SWXV 3/2-way miniature direct acting solenoid valve

Valve Selection List

Pipe Conn -ection	Orifice mm	Top mm	CV Factor	Operating pressure differential (kgf/cm²) Min.	Operating pressure differential (kgf/cm²) Max.	Coil Type	Power W	Coil Class	Model Code AC220V	Weight KG
M6	1.5	1.2	0.07	0	3	W	6	H	SWXV1WH13N3MC2	0.11
	2.0	1.2	0.13	0	3	W	6	H	SWXV1WH13N3M02	

Normally closed

De-energized

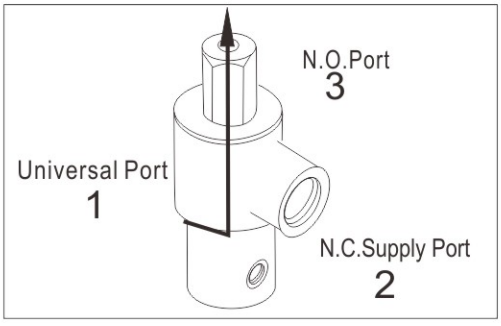

Energized

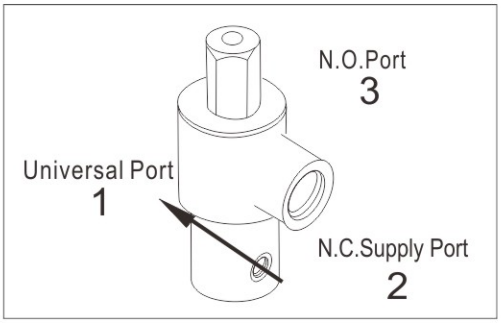

Valve Selection List

Pipe Conn -ection	Orifice mm	Top mm	CV Factor	Operating pressure differential (kgf/cm²) Min.	Operating pressure differential (kgf/cm²) Max.	Coil Type	Power W	Coil Class	Model Code AC220V	Weight KG
M6	1.5	1.2	0.07	0	4	W	6	H	SWXV2WH13N3MC2	0.11
	2.0	1.2	0.13	0	2	W	6	H	SWXV2WH13N3M02	

Normally Open

De-energized

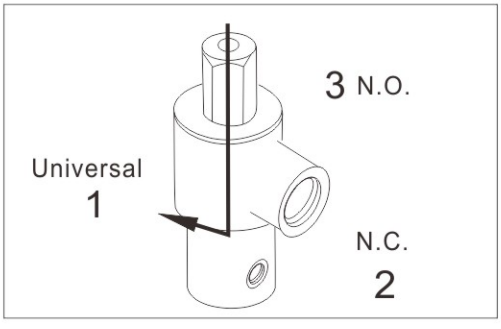

Energized

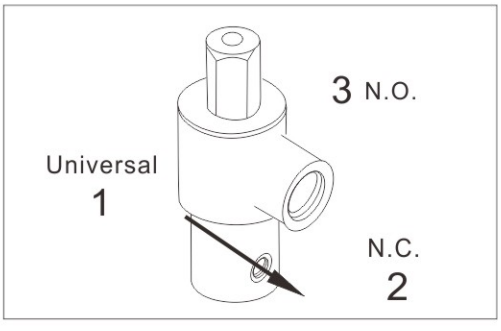

SWXV 3/2-way miniature direct acting solenoid valve

Valve Selection List

Pipe Conn -ection	Orifice mm	Top mm	CV Factor	Operating pressure differential (kgf/cm²)		Coil Type	Power W	Coil Class	Model Code AC220V	Weight KG
				Min.	Max.					
M6	1.5	1.2	0.07	0	10	W	6	H	SWXV3WH13N3MC2	0.11
	2.0	1.2	0.13	0	7	W	6	H	SWXV3WH13N3M02	

Diverting

De-energized

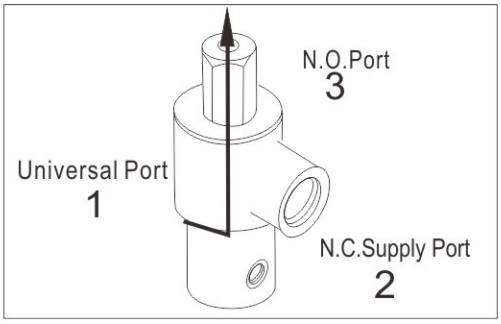

Energized

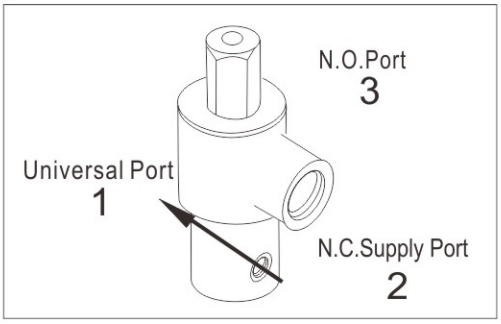

Valve Selection List

Pipe Conn -ection	Orifice mm	Top mm	CV Factor	Operating pressure differential (kgf/cm²)		Coil Type	Power W	Coil Class	Model Code AC220V	Weight KG
				Min.	Max.					
M6	1.5	1.2	0.07	0	2.5	W	6	H	SWXV4WH13N3MC2	0.11
	2.0	1.2	0.13	0	1.5	W	6	H	SWXV4WH13N3M02	

Universal

De-energized

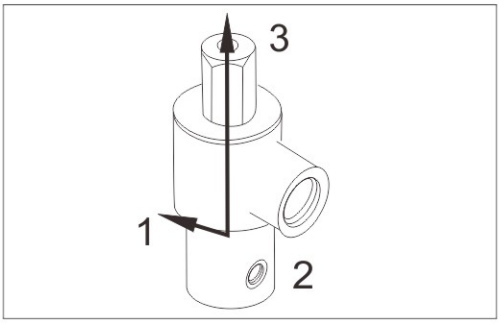

Energized

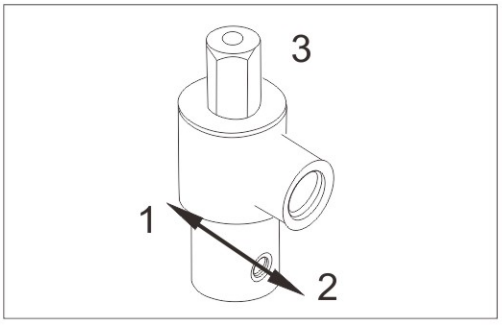

SZXF series miniature axial solenoid valve · normally closed

1. 2/2 way normally closed axial solenoid valve, closed when de-energized open , open when energized
2. Main characteristic :axial design, low power, small size, easy integration, can be widely used in medical, pharmaceutical, analytical instruments and other industries
3. Body material: SS316
4. Ambient temperature: 0 ° C to 65 ° C
5. Coil voltage: DC24V, DC12V, etc., ±10% allowed
6. Seal material: can be used NBR, VITON, EPDM and other kinds of seal
7. Medium: neutral fluid, fluid viscosity: less than 20CST body connection: M6
8. Coil connection type: lead type (length 350mm)

Flow as the arrow,mounts in any position, Best position is solenoid certical and upright direction.



Solenoid Valves Numbering System for Order

Position description	1	2	3	4	5	6	7	8	9	10
	Valve Series	Mode of Operation	Coil Type	Coil Class	Voltage	Seal Material	Body Material	Pipe Size	Orifice (ϕ mm)	Options
E.G.	SZXF	1	W	H	13	V	3	M	02	☐
		1: Normally closed	W: Metallic Housing, Lead wires	H= H Class	12=DC12V 13=DC24V	N=NBR V=VITON E=EPDM	3= SS316	M=M6	01=1.0 C1=1.2 C2=1.5 02=2.0	

SZXF series miniature axial solenoid valve · normally closed

External Dimensions

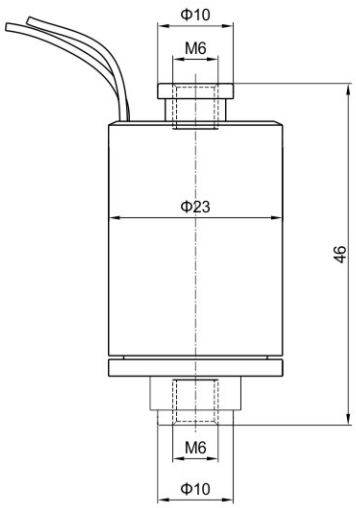

Valve Selection List

Pipe Conn -ection	Orifice mm	Top mm	Operating pressure differential (kgf/cm²)		Max. fluids Temp. ℃	Coil Type	Coil Class	Power W	Model Code AC220V	Weight KG
			Min.	Max.						
M6	1.0	0.04	0	10	80	W	H	2.8	SZXF1WH13N3M01	0.1
	1.0	0.04	0	10	120	W	H	2.8	SZXF1WH13E3M01	
	1.0	0.04	0	10	120	W	H	2.8	SZXF1WH13V3M01	
M6	1.2	0.05	0	10	80	W	H	2.8	SZXF1WH13N3MC1	
	1.2	0.05	0	10	120	W	H	2.8	SZXF1WH13E3MC1	
	1.2	0.05	0	10	120	W	H	2.8	SZXF1WH13V3MC1	
M6	1.5	0.08	0	8	80	W	H	2.8	SZXF1WH13N3MC2	
	1.5	0.08	0	8	120	W	H	2.8	SZXF1WH13E3MC2	
	1.5	0.08	0	8	120	W	H	2.8	SZXF1WH13V3MC2	
M6	2.0	0.14	0	6	80	W	H	2.8	SZXF1WH13N3M02	
	2.0	0.14	0	6	120	W	H	2.8	SZXF1WH13E3M02	
	2.0	0.14	0	6	120	W	H	2.8	SZXF1WH13V3M02	

SWGM series micro power small diaphragm isolation solenoid valve · normally closed

1. Main features: low power, small size, easy integration, can be widely used in medical, pharmaceutical, analytical instruments and other industries
2. Body material: PEEK、PTFE、SS316
3. Ambient temperature: 0 ° C to 65 ° C
4. Coil voltage: DC24V, DC12V, etc., ±10% allowed
5. Coil power：3. 8W
6. Seal material: can be used NBR, VITON, EPDM and other kinds of seal
7. Medium: Acid, alkali, and ultra-clean fluids
8. body connection: M6
9. Coil connection type: lead type (length 350mm)

Flow as the arrow,mounts in any position, Best position is solenoid certical and upright direction.



Solenoid Valves Numbering System for Order

1	2	3	4	5	6	7	8	9	10
Valve Series	Mode of Operation	Coil Type	Coil Class	Voltage	Seal Material	Body Material	Pipe Size	Orifice (ϕ mm)	Options
SWGM	**1**	**W**	**H**	**13**	**V**	**K**	**M**	**02**	☐
SWGM	1: Normally closed	W: Metallic Housing, Lead wires	H= H Class	12=DC12V 13=DC24V	V=VITON E=EPDM F=FFKM	K=PEEK T=PTFE 3=SS316	M=M6 N=1/4–28 UNF	C2=1.5 02=2.0 C3=2.5 03=3.0	

SWGM series micro power small diaphragm isolation solenoid valve · normally closed

External Dimensions

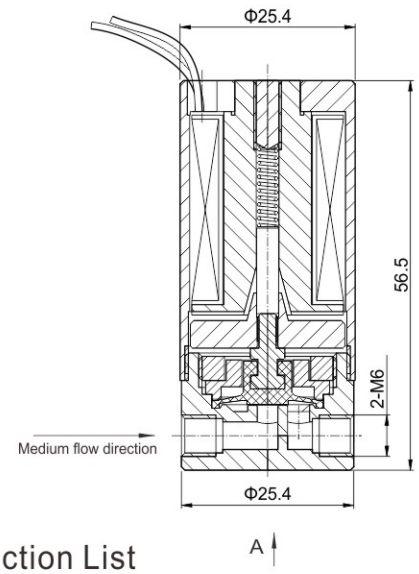

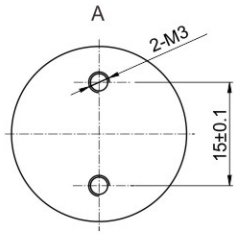



M6、1/4–28UNF

External diameter:1.6、2.0、2.5、3.0、3.2
five types can choose

Valve Selection List

Pipe Conn -ection	Orifice mm	CV Factor	Operating pressure differential (PSI)		Coil Type	Coil Class	Power W	Model Code AC220V	Weight KG
			Min.	Max.					
M6	1.5	0.04	0	30	W	H	3.8	SWGM1WH13VKMC2	0.16
	1.5	0.04	0	30	W	H	3.8	SWGM1WH13VTMC2	
	1.5	0.04	0	30	W	H	3.8	SWGM1WH13V3MC2	0.22
	1.5	0.04	0	30	W	H	3.8	SWGM1WH13EKMC2	0.16
	1.5	0.04	0	30	W	H	3.8	SWGM1WH13ETMC2	
	1.5	0.04	0	30	W	H	3.8	SWGM1WH13E3MC2	0.22
	1.5	0.04	0	30	W	H	3.8	SWGM1WH13FKMC2	0.16
	1.5	0.04	0	30	W	H	3.8	SWGM1WH13FTMC2	
	2.0	0.06	0	20	W	H	3.8	SWGM1WH13VKM02	
	2.0	0.06	0	20	W	H	3.8	SWGM1WH13VTM02	
	2.0	0.06	0	20	W	H	3.8	SWGM1WH13V3M02	0.22
	2.0	0.06	0	20	W	H	3.8	SWGM1WH13EKM02	0.16
	2.0	0.06	0	20	W	H	3.8	SWGM1WH13ETM02	
	2.0	0.06	0	20	W	H	3.8	SWGM1WH13E3M02	0.22
	2.0	0.06	0	20	W	H	3.8	SWGM1WH13FKM02	0.16
	2.0	0.06	0	20	W	H	3.8	SWGM1WH13FTM02	
	2.5	0.08	0	15	W	H	3.8	SWGM1WH13VKMC3	
	2.5	0.08	0	15	W	H	3.8	SWGM1WH13VTMC3	
	2.5	0.08	0	15	W	H	3.8	SWGM1WH13V3MC3	0.22
	2.5	0.08	0	15	W	H	3.8	SWGM1WH13EKMC3	0.16
	2.5	0.08	0	15	W	H	3.8	SWGM1WH13ETMC3	
	2.5	0.08	0	15	W	H	3.8	SWGM1WH13E3MC3	0.22
	2.5	0.08	0	15	W	H	3.8	SWGM1WH13FKMC3	0.16
	2.5	0.08	0	15	W	H	3.8	SWGM1WH13FTMC3	
	3.0	0.1	0	10	W	H	3.8	SWGM1WH13VKM03	
	3.0	0.1	0	10	W	H	3.8	SWGM1WH13VTM03	
	3.0	0.1	0	10	W	H	3.8	SWGM1WH13V3M03	0.22
	3.0	0.1	0	10	W	H	3.8	SWGM1WH13EKM03	0.16
	3.0	0.1	0	10	W	H	3.8	SWGM1WH13ETM03	
	3.0	0.1	0	10	W	H	3.8	SWGM1WH13E3M03	0.22
	3.0	0.1	0	10	W	H	3.8	SWGM1WH13FKM03	0.16
	3.0	0.1	0	10	W	H	3.8	SWGM1WH13FTM03	

SJGM series pinch solenoid valve

The micro-pinch valve is driven by electromagnetic force and spring, squeezed and squeezed.

Loosen the hose to control the opening and closing of the pipe, which is electromagnetic driven.

The mechanism and the hose are completely independent. The medium only comes into contact with the hose.

The liquid path is unimpeded, the flow coefficient is relatively large, and the pinch valve is extensive.

Used in blood analysis, urine analysis, water analysis, belongs to Health care industry.



Technical Parameters

Code	SJGM-05
Hose size	Inner:3.2mm outer6.4 mm
Hose material	silicon, ; Biochemical tube, SHORE:HA 50
pressure	0~ 20PSI
Body material	POM
medium	gas or ultra-clean liquids
Wire length	350mm(Can be special made)
power	3.8W
weight	0.14kg
lifetime	two million

Note:
1. The silicone rubber hose is not available when the conventional product is ordered
2. Solenoid pinch valve can be customized according to the inside and outside diameters of hoses of other specifications, but hose samples shall be provided.。

External Dimensions

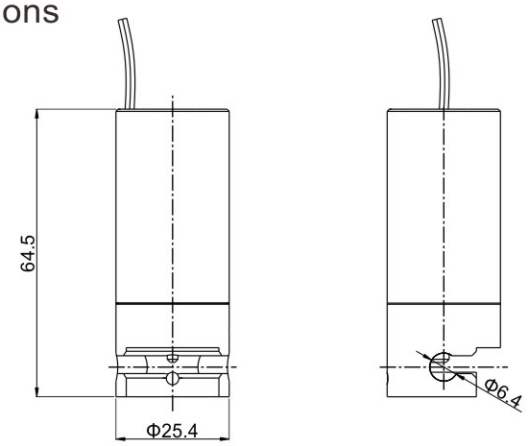

SJGF series 2/2-way pinch solenoid valve normally closed

This series of products characteristics , can be used with 3.2*6.4 or 6.4*9.5 silica gel tube.

Intubation from the side facilitates replacement and maintenance. Small in size, long life, steady quality Can be used in water quality, biochemical, medical and other instruments andequipment.

The pinch solenoid valve relies on the piston to squeeze the hose and electromagnetic force under the action of spring force. The piston overcomes the spring force by releasing the hose to control the closing and opening of the pipe only.

The inner wall of the hose is in direct contact with the medium.



Technical Parameters

Code		SJGF-3.2	SJGF-6.4
Hose size		3.2*6.4 Shore50° silicon tube	6.4*9.5 Shore50° silicon tube
Pressure		0~20PSI	0~12PSI
Body material		Aluminum alloy 6062	
Piston material		PA+GF30	
Medium		Non-corrosive gases and liquids	
Medium temperature		-20℃~120℃	
Ambient temperature		0℃~60℃	
Power (W)	DC24V	17	17
	DC12V	17	17
Weight (KG)		0.40	0.40

Note:
1. The silicone rubber hose is not available when the conventional product is ordered
2. Solenoid pinch valve can be customized according to the inside and outside diameters of hoses of other specifications, but hose samples shall be provided.

External Dimensions

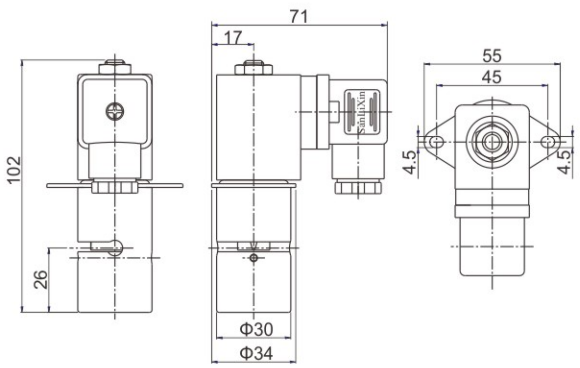

SJGF-3.2

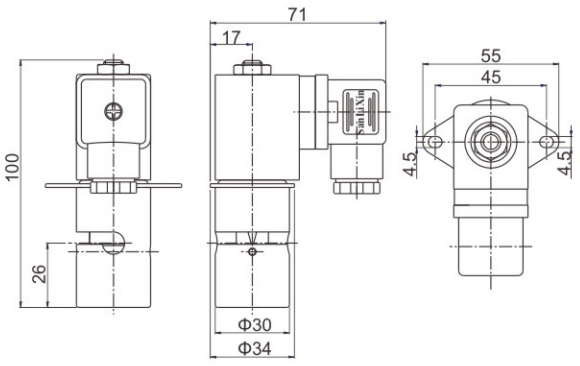

SJGF-6.4

SJGF series 2/2-way pinch solenoid valve normally open

This series of products characteristics , can be used with 3.2*6.4 or 6.4*9.5 silica gel tube.

Intubation from the side facilitates replacement and maintenance. Small in size, long life, steady quality Can be used in water quality, biochemical, medical and other instruments andequipment.

The pinch solenoid valve relies on the piston to squeeze the hose and electromagnetic force under the action of spring force. The piston overcomes the spring force by releasing the hose to control the closing and opening of the pipe only.

The inner wall of the hose is in direct contact with the medium.



Technical Parameters

Code		SJGF2-3.2	SJGF2-6.4
Hose size		3.2*6.4 Shore 45°~55° silicon tube	6.4*9.5 Shore 45°~55° silicon tube
Pressure		0~20PSI	0~12PSI
Body material		Aluminum alloy 6062	
Piston material		PAGF30	
Medium		Non–corrosive gases and liquids	
Medium temperature		–20℃~120℃	
Ambient temperature		0℃~60℃	
Power (W)	DC24V	17	17
	DC12V	17	17
Installation size		45*4.5	45*4.5
Weight (KG)		0.40	0.40

Note:
1. The silicone rubber hose is not available when the conventional product is ordered
2. Solenoid pinch valve can be customized according to the inside and outside diameters of hoses of other specifications, but hose samples shall be provided.

External Dimensions

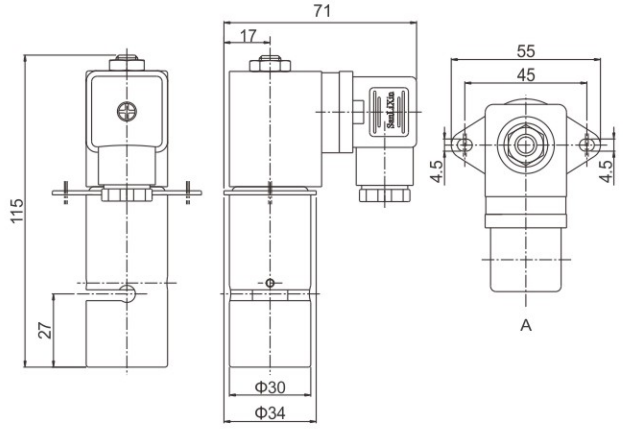

SJGF2-3.2

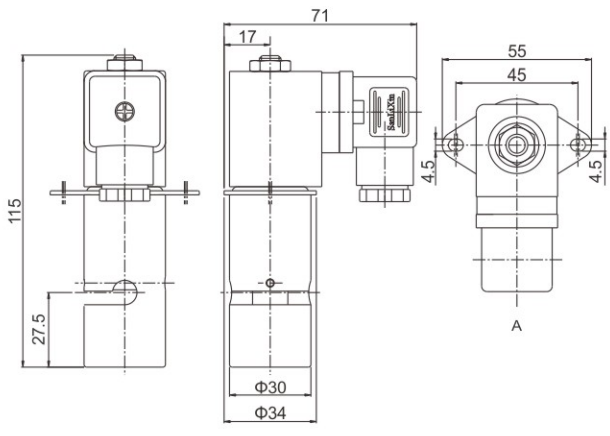

SJGF2-6.4

SJGF3 3/2-way pinch solenoid valve normally open

- Compatible with 3.2×6.4 mm or 6.4×9.5 mm silicone tubing
- Side tubing connection
- Top port: normally closed
- Bottom port: normally open – easy to replace and maintain
- Small size, long life, stable quality, high cost performance
- Suitable for water treatment, chemical, medical, and other instruments



Technical Parameters

Code		SJGF2-3.2	SJGF2-6.4
Hose size		3.2*6.4 Shore 45°~55° silicon tube	6.4*9.5 Shore 45°~55° silicon tube
Pressure		0~20PSI	0~14PSI
Body material		Aluminum alloy	
Piston material		PAGF30	
Medium		Non–corrosive gases and liquids	
Medium temperature		–20℃~120℃	
Ambient temperature		0℃~60℃	
Power (W)	DC24V	17	
	DC12V	17	
Response Time		＜50ms	
Installation size		50*4.5	
Weight (KG)		0.50	

External Dimensions

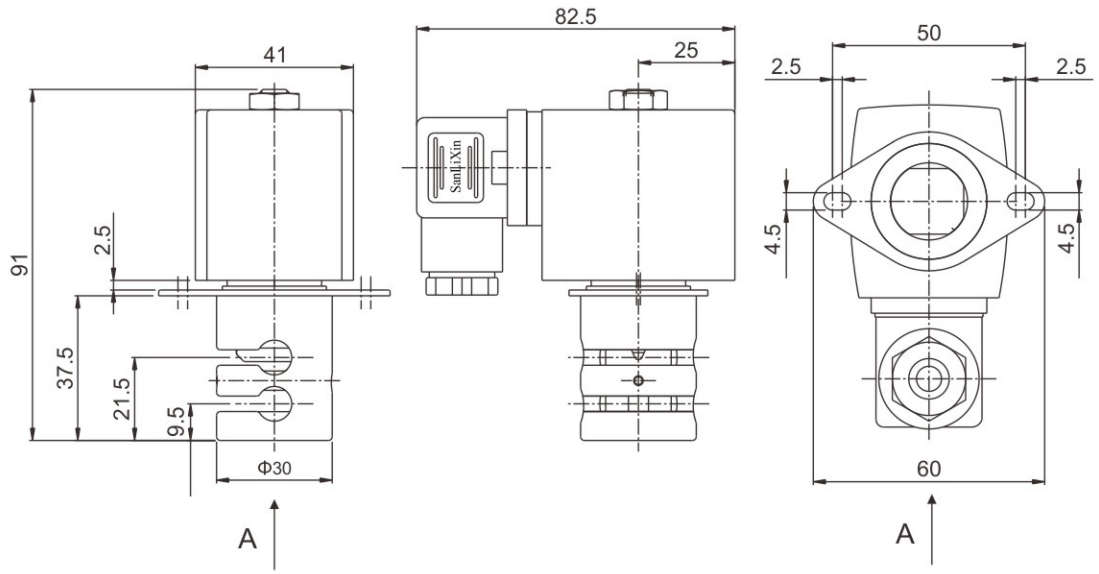

SWXE series micro power small combined solenoid valve

1. 2/2 way normally closed axial solenoid valve, closed when de-energized open , open when energized
2. Main features: low power, small size, easy integration, can be widely used in medical, pharmaceutical, analytical instruments and other industries
3. Body material: PEEK、SS316
4. Ambient temperature: 0 ° C to 65 ° C
5. Coil voltage: DC24V, DC12V, etc., ±10% allowed
6. Seal material: can be used NBR, VITON, EPDM and other kinds of seal
7. Medium: Water, air and other neutral fluid, isolated structure can pass acid, alkali, ultra-clean fluid, etc
8. body connection: M6、1/8
9. Coil connection type: lead type (length 350mm)

Flow as the arrow,mounts in any position, Best position is solenoid certical and upright direction.



0.06kg

Solenoid Valves Numbering System for Order

1	2	3	4	5	6	7	8	9	10	11
Valve Series	Mode of Operation	Coil Type	Coil Class	Voltage	Seal Material	Body Material	Pipe Size	Orifice (ϕ mm)	Outlet	Options
SWXE	**1**	**W**	**H**	**13**	**V**	**3**	**M**	**02**	**N4**	☐
SWXE	1: Normally closed	W: Metallic Housing, Lead wires	H= H Class	12=DC12V 13=DC24V	N=NBR V=VITON E=EPDM F=FFKM	3= SS316 K=PEEK	M=M6 A=1/8	01=1.0 C1=1.2 C2=1.5 02=2.0 C3=2.5 03=3.0	N4=4 N6=6 N8=8	A=Polygon The blank is a straight line G=Isolated type construction Blank is non–isolated

SWXE series micro power small combined solenoid valve

External Dimensions

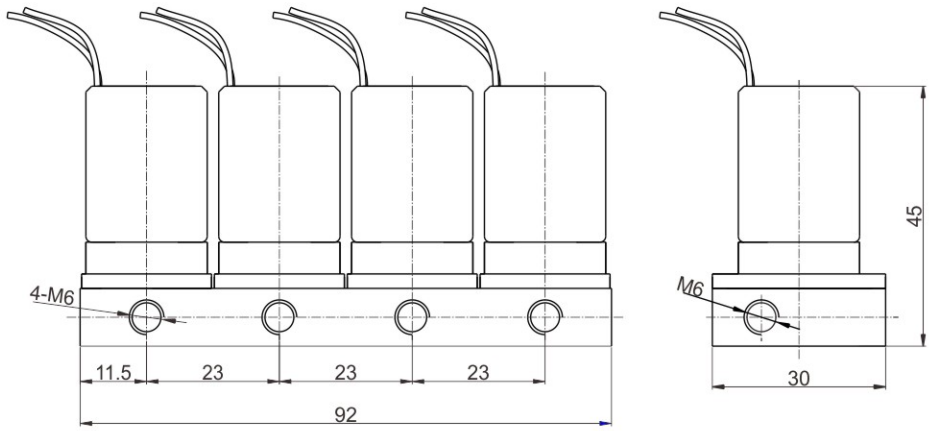

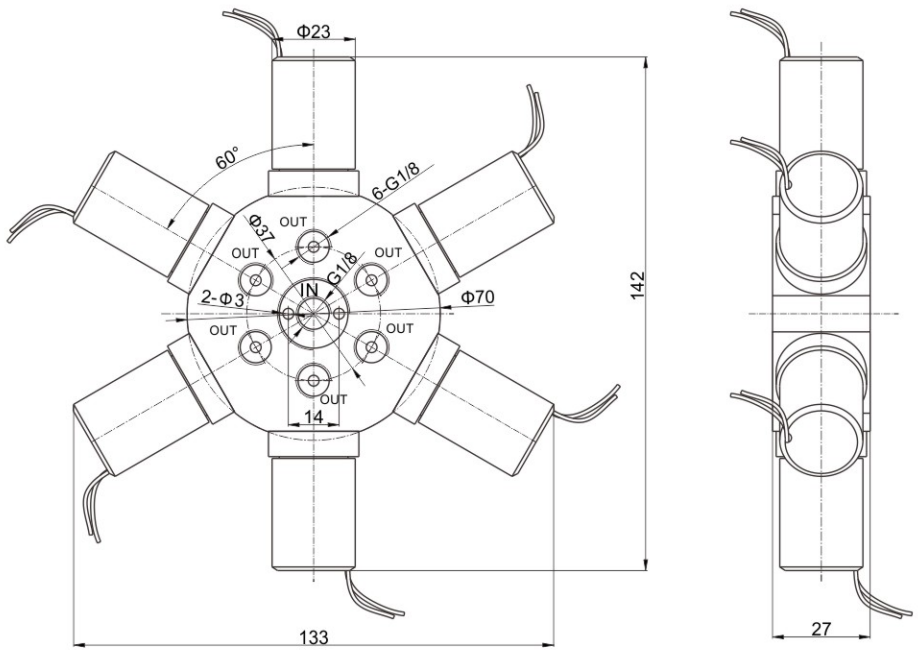

SWXE series micro power small combined solenoid valve

Valve Selection List（Non-isolated ）

Pipe Conn -ection	Orifice mm	CV Factor	Operating pressure differential (kgf/cm²)		Max. fluids Temp. ℃	Coil Type	Coil Class	Power W	Model Code DC24V
			Min.	Max.					
M6	1.0	0.04	0	10	80	W	H	2.8	SWXE1WH13N3M01N4
	1.0	0.04	0	10	120	W	H	2.8	SWXE1WH13E3M01N4
	1.0	0.04	0	10	120	W	H	2.8	SWXE1WH13V3M01N4
M6	1.2	0.05	0	10	80	W	H	2.8	SWXE1WH13N3MC1N4
	1.2	0.05	0	10	120	W	H	2.8	SWXE1WH13E3MC1N4
	1.2	0.05	0	10	120	W	H	2.8	SWXE1WH13V3MC1N4
M6	1.5	0.08	0	8	80	W	H	2.8	SWXE1WH13N3MC2N4
	1.5	0.08	0	8	120	W	H	2.8	SWXE1WH13E3MC2N4
	1.5	0.08	0	8	120	W	H	2.8	SWXE1WH13V3MC2N4
M6	2.0	0.14	0	6	80	W	H	2.8	SWXE1WH13N3M02N4
	2.0	0.14	0	6	120	W	H	2.8	SWXE1WH13E3M02N4
	2.0	0.14	0	6	120	W	H	2.8	SWXE1WH13V3M02N4

Valve Selection List（isolated ）

Pipe Conn -ection	Orifice mm	CV Factor	Operating pressure differential (PSI)		Max. fluids Temp. ℃	Coil Type	Coil Class	Power W	Model Code DC24V
			Min.	Max.					
M6	1.5	0.04	0	30	120	W	H	3.8	SWXE1WH13VKMC2N4AG
	2.0	0.06	0	20	120	W	H	3.8	SWXE1WH13VKM02N6AG
	2.5	0.08	0	15	120	W	H	3.8	SWXE1WH13VKMC3N6AG
	3.0	0.1	0	10	120	W	H	3.8	SWXE1WH13VKM03N6AG
1/8	1.5	0.04	0	30	120	W	H	3.8	SWXE1WH13VKAC2N4AG
	2.0	0.06	0	20	120	W	H	3.8	SWXE1WH13VKA02N6AG
	2.5	0.08	0	15	120	W	H	3.8	SWXE1WH13VKAC3N6AG
	3.0	0.1	0	10	120	W	H	3.8	SWXE1WH13VKA03N6AG

SWXG series miniature high pressure axial solenoid valve · normally closed

1. 2/2 way normally closed solenoid valve, closed when de-energized open , open when energized
2. Main characteristic :axial design, low power, small size, easy integration,high pressure
3. Ambient temperature: 0 ° C to 65 ° C
4. Coil voltage: DC24V, DC12V, etc., ±10% allowed
5. Coil power：6W
6. Seal material: VITON（Other materials are optional, please consult our company)
7. Medium: neutral fluid, fluid viscosity: less than 20CST
8. Body connection: 1/8
9. Coil connection type: lead type (length 350mm)

Arbitrary installation in the direction of the arrow on the valve



Solenoid Valves Numbering System for Order

1	2	3	4	5	6	7	8	9	10
Valve Series	Mode of Operation	Coil Type	Coil Class	Voltage	Seal Material	Body Material	Pipe Size	Orifice (ϕ mm)	Options
SWXG	**1**	**W**	**H**	**13**	**V**	**3**	**A**	**C05**	☐
SWXG	1: Normally closed	W: Metallic Housing, Lead wires	H= H Class	12=DC12V 13=DC24V	V=VITON For other sealing materials, please consult our company	3= SS316	A=1/8 For other connection methods, please consult our company	C03=0.3 C05=0.5 C0=0.8 01=1.0	N=NPT Connection

SWXG series miniature high pressure axial solenoid valve · normally closed

External Dimensions

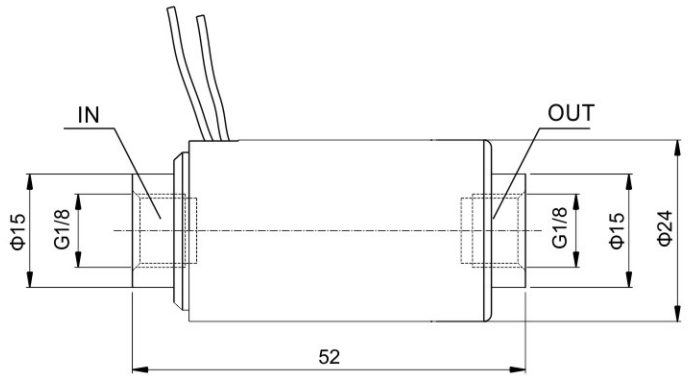

Valve Selection List

Pipe Conn -ection	Orifice mm	CV Factor	Operating pressure differential (kgf/cm²)		Max. fluids Temp. ℃	Coil Type	Coil Class	Power W	Model Code DC24V linear type	weight
			Min.	Max. Air, Water						
1/8	0.3	0.003	0	180	80	W	H	6	SWXG1WH13V3AC03	0.13
	0.5	0.01	0	150	80	W	H	6	SWXG1WH13V3AC05	
	0.8	0.025	0	70	80	W	H	6	SWXG1WH13V3AC0	
	1	0.04	0	40	80	W	H	6	SWXG1WH13V3A01	

SWFG miniature high pressure axial solenoid valvenormally closed

1.2/2 way normally closed axial solenoid valve, closed when de-energized open , open when energized
2.Main characteristic :axial design, low power, small size, easy integration,high pressure
3.Body material: SS316
4.Ambient temperature: 0℃～65℃
5.Coil voltage: DC24V、DC12V etc，±10%
6.Pressure: 0-300kgf/cm^2
7.Medium: Neutral fluid，viscosity: less than 20CST
8.Body connection: 1/8
9.Coil connection type: lead type (length 350mm)
Arbitrary installation in the direction of the arrow on the valve



Solenoid Valves Numbering System for Order

1	2	3	4	5	6	7	8	9	10
Valve Series	Mode of Operation	Coil Type	Coil Class	Voltage	Seal Material	Body Material	Pipe Size	Orifice (ϕ mm)	Options
SWFG	**1**	**D**	**F**	**13**	**N**	**1**	**D**	**15**	□
	1: Normally closed	W: Metallic Housing, Lead wires	H= H Class	13=DC24V 12=DC12V	C=PCTFE	3= SS316	A=1/8	C05=5.0 C0=0.8 01=1.0 C2=1.5 02=2.0	N=NPT

External Dimensions

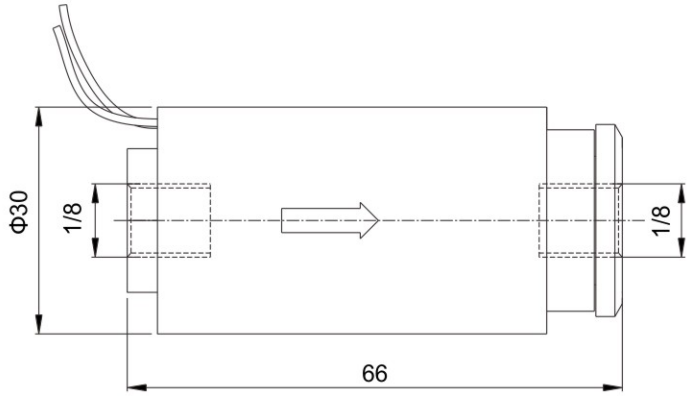

Valve Selection List

Pipe Conn -ection	Orifice mm	CV Factor	Operating pressure differential (kgf/cm^2) Min.	Operating pressure differential (kgf/cm^2) Max. Air、Water、Liquid	Max. fluids Temp. ℃	Line	Line	Power W	Model Code DC 24V Stainless steel	Weight Kg
1/8	0.5	0.01	0	300	120	W	H	10	SWFG1WH13C3AC05	0.25
	0.8	0.025	0	250	120	W	H	10	SWFG1WH13C3AC0	
	1.0	0.04	0	150	120	W	H	10	SWFG1WH13C3A01	
	1.5	0.05	0	80	120	W	H	10	SWFG1WH13C3AC2	
	2.0	0.08	0	50	120	W	H	10	SWFG1WH13C3A02	

SWLF 2/2-way direct acting solenoid valve · normally closed

1. 2/2 way normally closed solenoid valve, closed when de-energized open , open when energized
2. Characterist: small in size, low power, ferrule fitting.
3. Body material: SS316
4. Ambient temperature: 0℃ to 65℃
5. Coil voltage: DC24V, DC12V
6. Seal material: VITON
7. Medium: air, water etc neutral fluid
8. Body connection: 1/4OD、1/8OD、06OD
9. Coil connection type: lead type (length 350mm)



Solenoid Valves Numbering System for Order

1	2	3	4	5	6	7	8	9
Valve Series	Mode of Operation	Coil Type	Coil Class	Voltage	Seal Material	Body Material	Pipe Size	Orifice (ϕ mm)
SWLF	**1**	**W**	**H**	**13**	**V**	**3**	**M**	**02**
SWLF	1: Normally closed	W: Metallic Housing, Lead wires	H= H Class	12=DC12V 13=DC24V	V=VITON	3=SS316	LA=1/8OD	C0=0.8 01=1.0 C1=1.2 C2=1.5
							LB=1/4OD LC=6OD	01=1.0 C1=1.2 C2=1.5 02–2.0

Product Breakdown

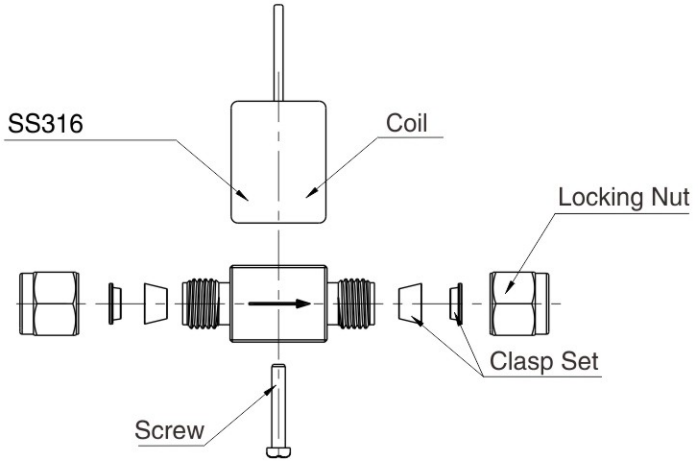

SWLF 2/2-way direct acting solenoid valve · normally closed

Valve Selection List

Pipe Conn -ection	Orifice mm	CV Factor	Operating pressure differential (kgf/cm²)		Max. fluids Temp. ℃	Coil Type	Coil Class	Power W	Model Code DC24V	Weight kg
			Min.	Max.						
1/8OD (3.17mm)	0.8	0.03	0	25	120	W	H	3.8	SWLF1WH13V3LAC0	0.14
	1.0	0.04	0	25	120	W	H	3.8	SWLF1WH13V3LA01	
	1.2	0.05	0	25	120	W	H	3.8	SWLF1WH13V3LAC1	
	1.5	0.08	0	16	120	W	H	3.8	SWLF1WH13V3LAC2	
1/4OD (6.35mm)	1.0	0.04	0	25	120	W	H	3.8	SWLF1WH13V3LB01	0.15
	1.2	0.05	0	25	120	W	H	3.8	SWLF1WH13V3LBC1	
	1.5	0.08	0	16	120	W	H	3.8	SWLF1WH13V3LBC2	
	2.0	0.14	0	10	120	W	H	4.8	SWLF1WH13V3LB02	
6OD (6mm)	1.0	0.04	0	25	120	W	H	3.8	SWLF1WH13V3LC01	0.15
	1.2	0.05	0	25	120	W	H	3.8	SWLF1WH13V3LCC1	
	1.5	0.08	0	16	120	W	H	3.8	SWLF1WH13V3LCC2	
	2.0	0.14	0	10	120	W	H	4.8	SWLF1WH13V3LC02	

External Dimensions

Φ0.8–1.5mm (1/8OD)

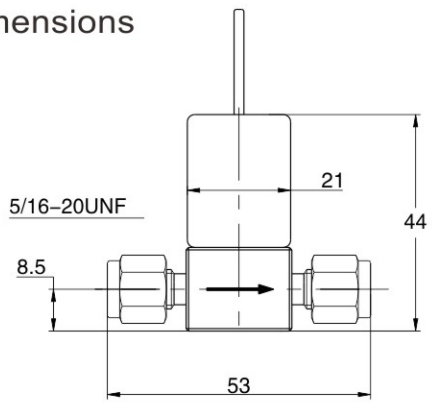

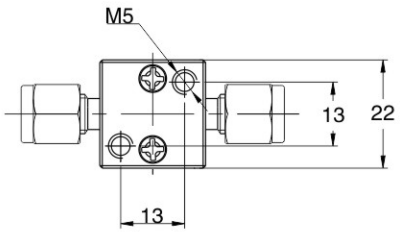

Φ1.0–2.0mm （1/4OD、06OD)

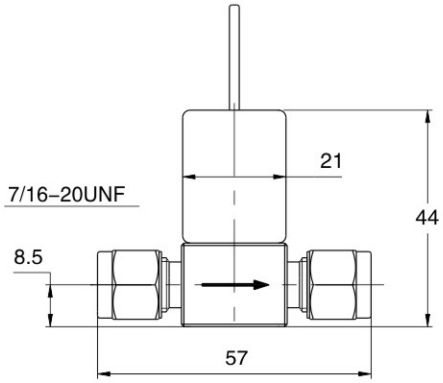

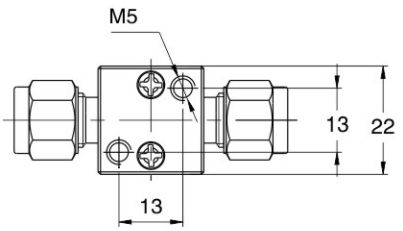

SWLG 2/2-way Direct acting high-pressure solenoid valve · normally closed

1. 2/2 way normally closed solenoid valve, closed when de-energized open , open when energized
2. Characterist: small in size, low power, ferrule fitting.
3. Body material: SS316
4. Ambient temperature: 0℃ to 65℃
5. Coil voltage: DC24V, DC12V
6. Seal material: VITON
7. Medium: air, water etc neutral fluid
8. Body connection: 1/4OD、1/8OD、06OD
9. Coil connection type: lead type (length 350mm)



Solenoid Valves Numbering System for Order

1	2	3	4	5	6	7	8	9
Valve Series	Mode of Operation	Coil Type	Coil Class	Voltage	Seal Material	Body Material	Pipe Size	Orifice (ϕ mm)
SWLG	**1**	**W**	**H**	**13**	**V**	**3**	**LB**	**01**
SWLG	1: Normally closed	W: Metallic Housing, Lead wires	H= H Class	12=DC12V 13=DC24V	V=VITON	3=SS316	LA=1/8OD	C03=0.3 C05=0.5 C0=0.8 01=1.0
							LB=1/4OD LC=6OD	C03=0.3 C05=0.5 C0=0.8 01=1.0

Product Breakdown

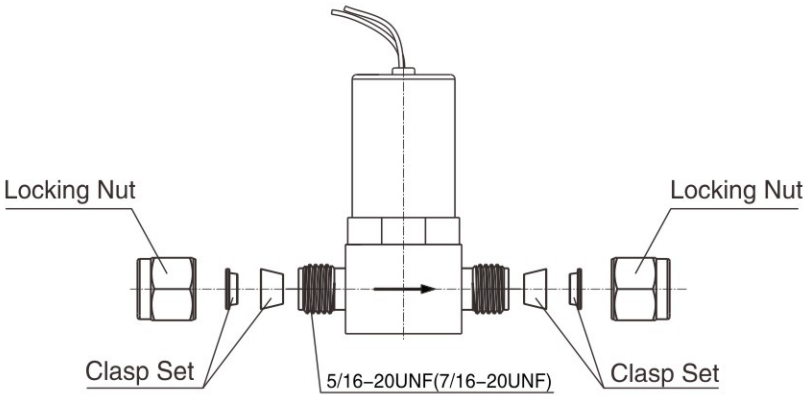

SWLG 2/2-way Direct acting high-pressure solenoid valve · normally closed

Valve Selection List

Pipe Conn -ection	Orifice mm	CV Factor	Operating pressure differential (kgf/cm²) Min.	Operating pressure differential (kgf/cm²) Max.	Max. fluids Temp. ℃	Coil Type	Coil Class	Power W	Model Code DC24V	Weight kg
1/8OD (3.17mm)	0.3	0.01	0	200	120	W	H	4.8	SWLG1WH13V3LAC03	0.21
	0.5	0.02	0	180	120	W	H	4.8	SWLG1WH13V3LAC05	
	0.8	0.03	0	120	120	W	H	4.8	SWLG1WH13V3LAC0	
	1.0	0.04	0	80	120	W	H	4.8	SWLG1WH13V3LA01	
1/4OD (6.35mm)	0.3	0.01	0	200	120	W	H	4.8	SWLG1WH13V3LBC03	0.22
	0.5	0.02	0	180	120	W	H	4.8	SWLG1WH13V3LBC05	
	0.8	0.03	0	120	120	W	H	4.8	SWLG1WH13V3LBC0	
	1.0	0.04	0	80	120	W	H	4.8	SWLG1WH13V3LB01	
6OD (6mm)	0.3	0.01	0	200	120	W	H	4.8	SWLG1WH13V3LCC03	0.22
	0.5	0.02	0	180	120	W	H	4.8	SWLG1WH13V3LCC05	
	0.8	0.03	0	120	120	W	H	4.8	SWLG1WH13V3LCC0	
	1.0	0.04	0	80	120	W	H	4.8	SWLG1WH13V3LC01	

External Dimensions

Φ0.3–1.0mm (1/8OD)

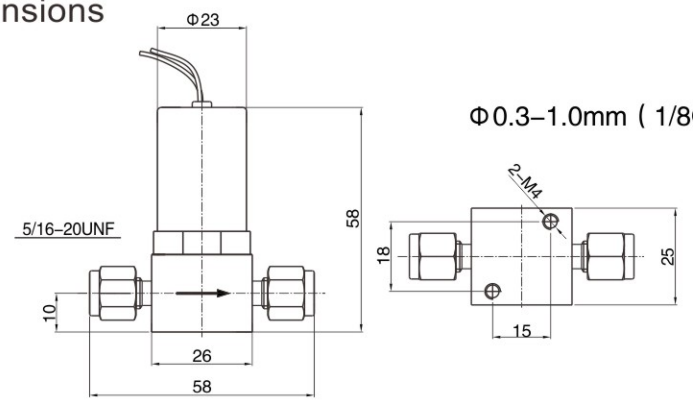

Φ0.3–1.0mm (1/4OD、6OD)

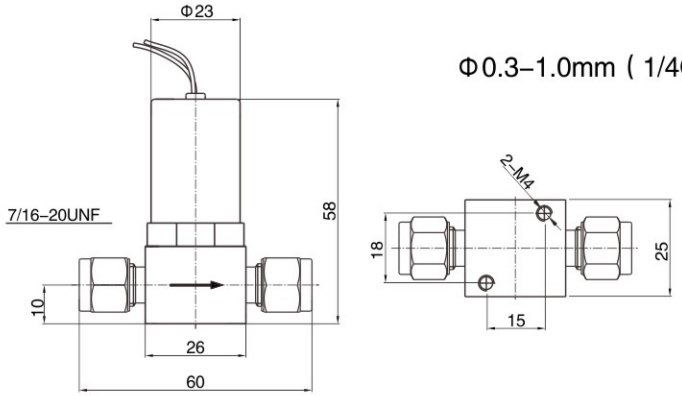

ZCKS 2/2-way Direct acting high-pressure solenoid valve · normally closed

Normally closed high-pressure solenoid valve

Minimum working pressure: 1×10^{-6} Pa
Out



Leakage

Int: 1.3×10^{-9} Pa • m^3/s

Ext: 1.3×10^{-11} Pa • m^3/s

Reverse pressure resistance: 50 kPa

Manufacturing Process

Degreasing Cleaning → Cleaning with pure water (16MΩ•cm) → Assembly → Inspection → Packaging

Technical Parameters

Actuation Type		Normally Closed
Orifice Diameter		2–6mm
Pipe Connection Type		Compression fitting
Withstand Pressure Mpa		1.5
Min. Working Pressure Pa (Outlet Side)		1×10^{-6}
Max. Working Pressure Mpa (Inlet Side)		0.3
Reverse Pressure ResistanceMPa (Outlet Side)		0.05
Leakage Rate Pa•m^3/s	Int	1.3×10^{-9}
	Ext	1.3×10^{-11}
Ambient & Fluid Temperature		5℃~60℃
Rated Voltage		DC24V、DC12V、AC220V
Power Consumption		17W
Coil Temperature Rise		65℃
Coil Insulation Class		F Class

ZCKS 2/2-way Direct acting high-pressure solenoid valve · normally closed

Solenoid Valves Numbering System for Order

No.	1	2	3	4	5	6	7	8	9	10
	Valve Series	Mode of Operation	Coil Type	Coil Class	Voltage	Seal Material	Body Material	Pipe Size	Orifice (ϕ mm)	Options
	ZCKS	1	D	F	13	V	3	LD	06	□
		1: Normally closed	D: DIN Standard Connections, Fully Encapsulated	F= F Class	12=DC12V 13=DC24V 02=AC220V	V=VITON	3= SS316	LB=1/4OD LD=3/8OD	02=2.0 03=3.0 C6=4.5 06=6.0	L= Neon Lamp

External Dimensions

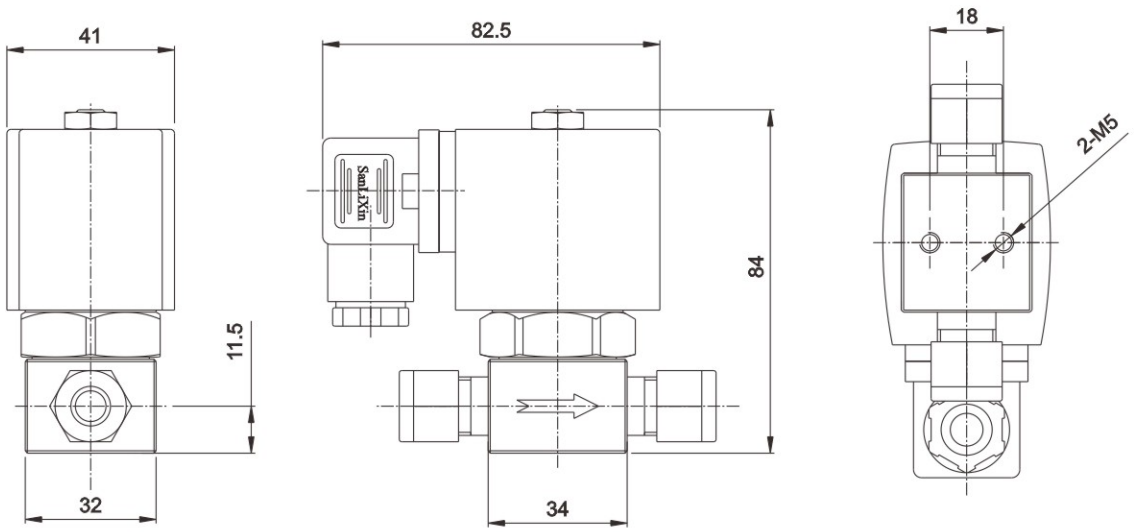

Valve Selection List

Pipe Conn -ection	Orifice mm	CV Factor	Operating pressure differential (MPa)		Coil Type	Coil Class	Power W	Model Code DC24V	Weight kg
			Min	Max					
1/4OD	2	0.15	-0.1	0.8	D	F	17	ZCKS1DF13V3LB02	0.63
	3	0.25	-0.1	0.6	D	F	17	ZCKS1DF13V3LB03	0.63
	4.5	0.6	-0.1	0.4	D	F	17	ZCKS1DF13V3LB04	0.63
3/8OD	4.5	0.6	-0.1	0.5	D	F	17	ZCKS1DF13V3LDC6	0.65
	6	0.8	-0.1	0.3	D	F	17	ZCKS1DF13V3LD06	0.65

S10 series super micro solenoid valve · normally closed

1. S10 series is a plug-in super micro solenoid valve, it is characterized by small size, light weight, low power consumption, easy to assemble.
2. can be widely used in medical, pharmaceutical, analytical instruments and other industries
3. 2/2 way normally closed solenoid valve, closed when de-energized open , open when energized
4. Body material: Brass、SS316
5. Seal material: VITON
6. Medium: neutral fluid such as air and water
7. Ambient temperature: 0 ° C to 65 ° C
8. Medium temperature: 0 ° C to 80 ° C
9. Coil voltage: DC24V, DC12V
10. Coil power:3W
11. diameter: ϕ0.3mm
12. Operating pressure: 0-6bar
13. Service life: more than 10 million times
14. Wiring mode: Lead type (lead length 15cm)
15. Weight: 18g
16. S10 series adopts special structure design, easy to install multiple solenoid valves in combination. Please consult our company for specific application mode and other technical requirements.



External Dimensions

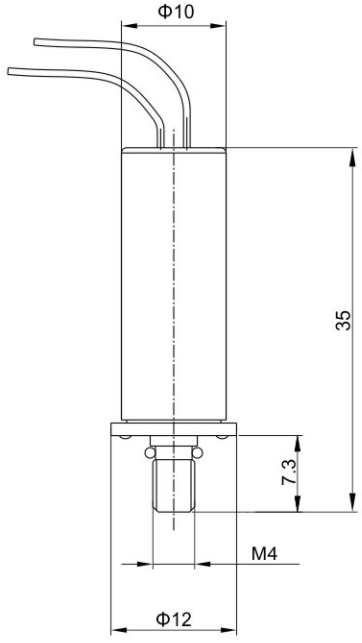

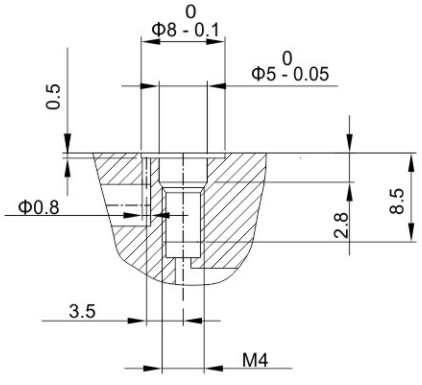

S15 series micro solenoid valve · normally closed

1. 2/2 way normally closed solenoid valve, closed when de-energized open , open when energized
2. Body material: SS316
3. Seal material: VITON
4. Medium: neutral fluid such as air and water
5. Ambient temperature: 0 ° C to 65 ° C
6. Medium temperature: 0 ° C to 80 ° C
7. Coil voltage: DC24V, DC12V
8. Coil power:4.5W
9. diameter: ϕ0.8mm
10. Operating pressure: 0-6bar
11. Service life: more than 10 million times
12. Wiring mode: Lead type (lead length 15cm)
13. S15 series adopts special structure design, easy to install multiple solenoid valves in combination. Please consult our company for specific application mode and other technical requirements.



External Dimensions

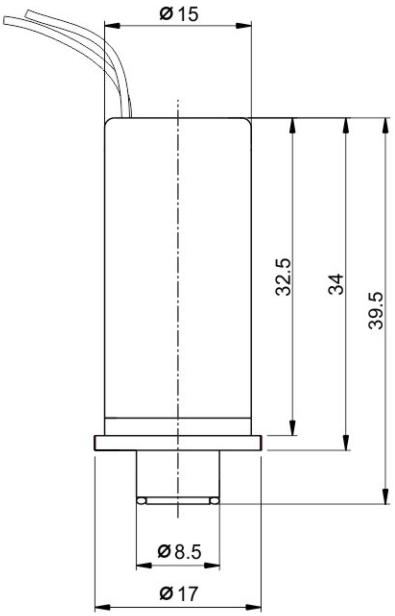

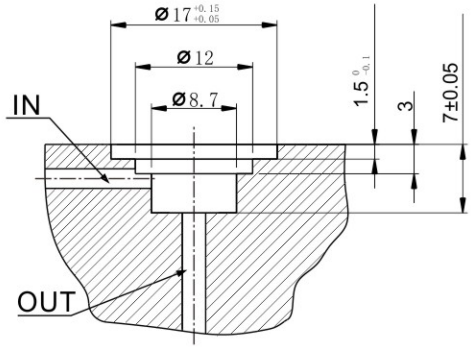

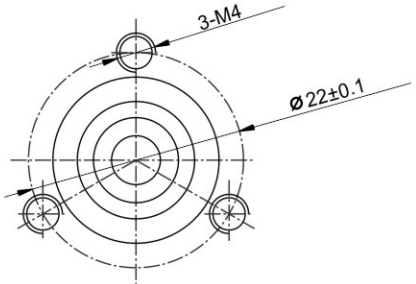

SXCF high pressure manifold solenoid valve · normally closed

Integrated 2/2 solenoid valve, normally closed type, closed when de-energized, open when energized.

Features modular integration: single inlet, multiple outlets.

Pressure resistance: 1 ~ 100kgf/cm^2

Ambient temp：0℃ ~ 65℃

Voltage: DC24V、DC12V、AC220V， ±10% allowed

Seal material: PBT

Connection seat material： Brass

Orifice： ϕ 12.0mm

Working medium:Water

Connection thread： IN： 3/4"

OUT： 1/2"



Solenoid Valves Numbering System for Order

1	2	3	4	5	6	7	8		9	10	11
Valve Series	Mode of Operation	Coil Type	Coil Class	Voltage	Seal Material	Body Material	Pipe Size		Orifice (ϕ mm)	Out let	Options
SXCF	**1**	**D**	**F**	**13**	**B**	**1**	**ED**		**12**	**N3**	☐
SXCF	1: Normally closed	D: DIN Standard Connections, Fully Encapsulated	F= F Class	12=DC12V 13=DC24V	B=PBT	1=Brass	In E=3/4"	Out D=1/2"	12=12.0	N2=2 N3=3 N4=4 N5=5 N6=6 N7=7 N8=8	N=NPT Connection L= Neon Lamp

SXCF high pressure manifold solenoid valve · normally closed

External Dimensions

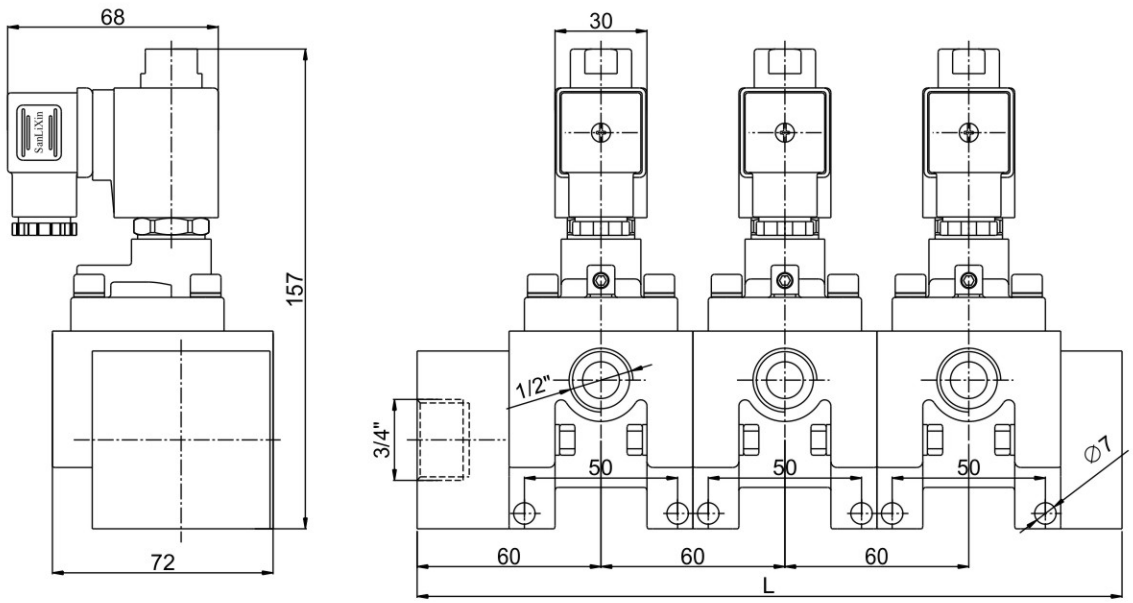

QTY.	2	3	4	5	6	7	8
L	170	230	290	350	410	470	530
Weight kg	3.4	5.1	6.8	8.5	10.2	11.9	13.6

Valve Selection List

Orifice mm	CV Factor	Operating pressure differential(kgf/cm²)			Coil Type	Coil Class	Power		Max. fluids Temp. ℃	Model Code DC24V
		Min	Max				VA	W		
			AC	DC			AC 220V	DC 24V		
12.0	2.8	1	100	90	D	F	22	13	120	SXCF1DF13B1ED12N3

STZF micro proportional solenoid valve

Miniature 2/2 proportional solenoid valve. Flow proportional to coil input. Small, light, low power (2W), low hysteresis (6%), good repeatability (<1%). Ideal for high-precision flow control.

Pressure resistance: DC12V / DC24V
Coil power：2W
Body material：SS316L
Connection type: F(Flat connection)、1/8、1/4
Orifice diameter：0.08、0.15、0.25、0.60、1.0、1.2
Ambient temp：0℃~50℃
medium temp：-5℃~70℃

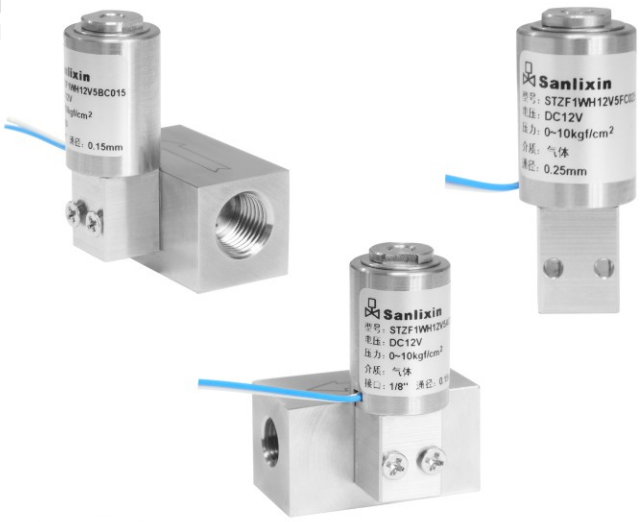

Solenoid Valves Numbering System for Order

1	2	3	4	5	6	7	8	9	10
Valve Series	Mode of Operation	Coil Type	Coil Class	Voltage	Seal Material	Body Material	Pipe Size	Orifice (ϕ mm)	Options
STZF	**1**	**W**	**H**	**12**	**V**	**5**	**F**	**01**	□
STZF	1: Normally closed	W: Metallic Housing, Lead wires	H= H Class	12=DC12V 13=DC24V	N= NBR E= EPDM V= VITON	5=SS316	F=Flat connection A=1/8 B=1/4	C008=0.08 C015=0.15 C025=0.25 C06=0.60 01=1.0 C1=1.2	N=NPT P=PT R=RC



STZF micro proportional solenoid valve

External Dimensions

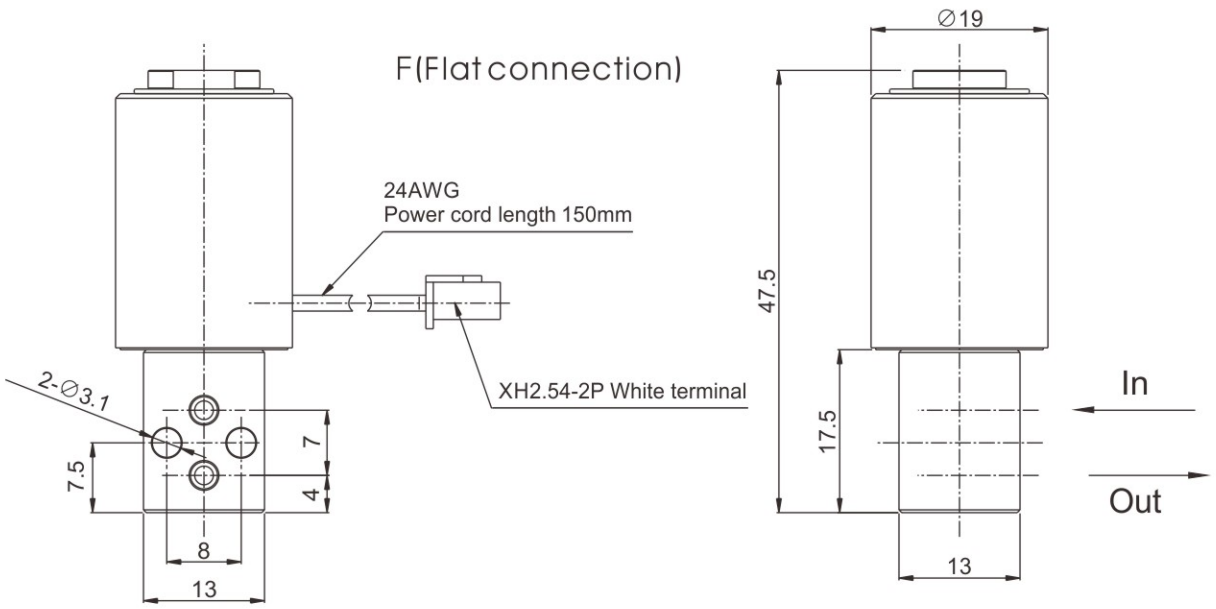

1/8、1/4 Threaded connection

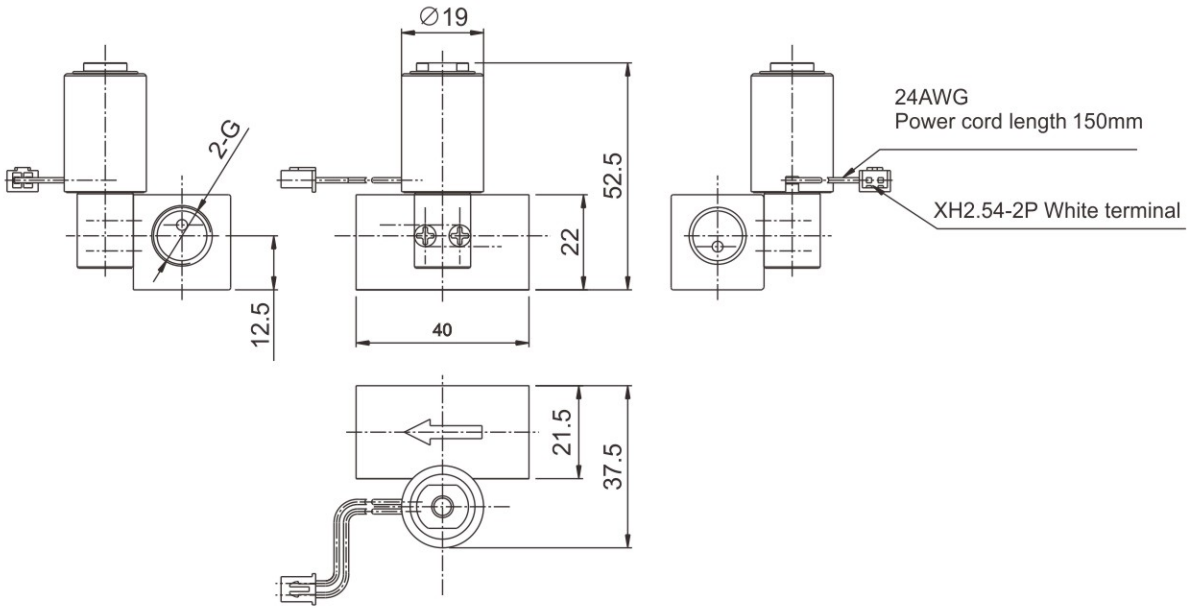

STZF micro proportional solenoid valve

Pressure flow curve diagram

STZF Series Pressure-Flow Curve
（DN0.08、DN0.15）

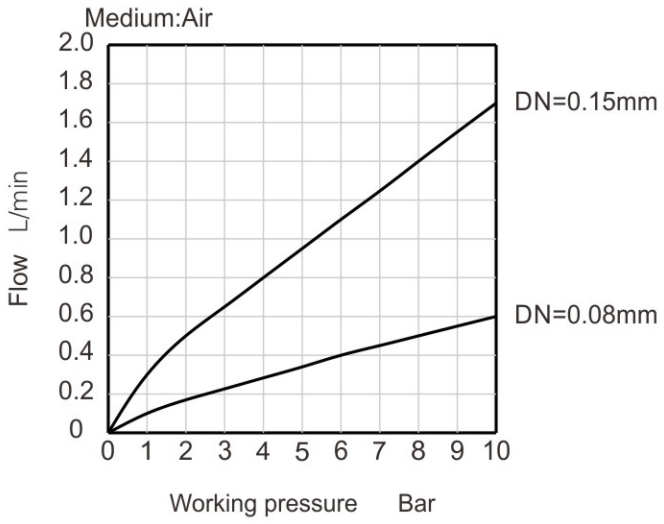

STZF Series Pressure-Flow Curve
（DN0.25、DN0.60、DN1.0、DN1.2）

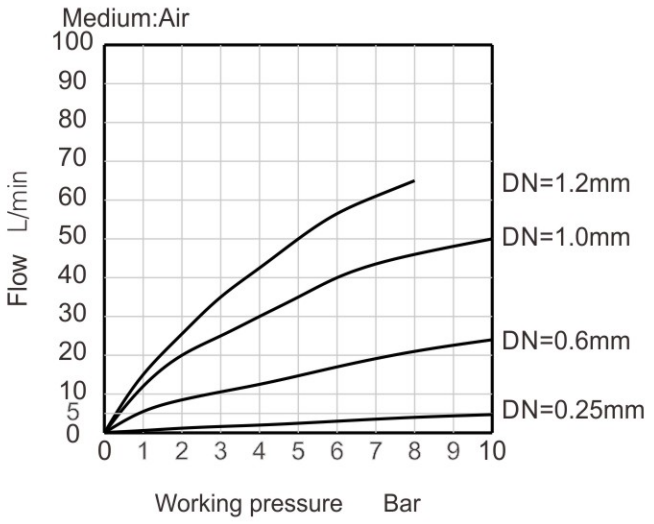

Current flow curve diagram

STZF Series Current-Flow Curve
Voltage DC12V DN0.08mm

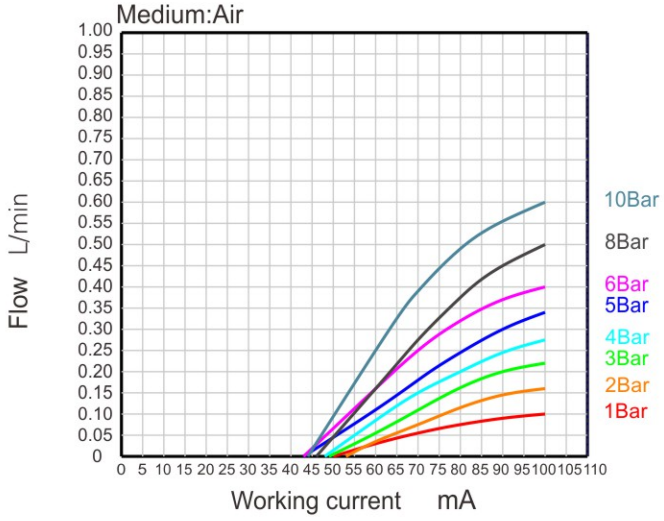

STZF Series Current-Flow Curve
Voltage DC12V DN0.15mm

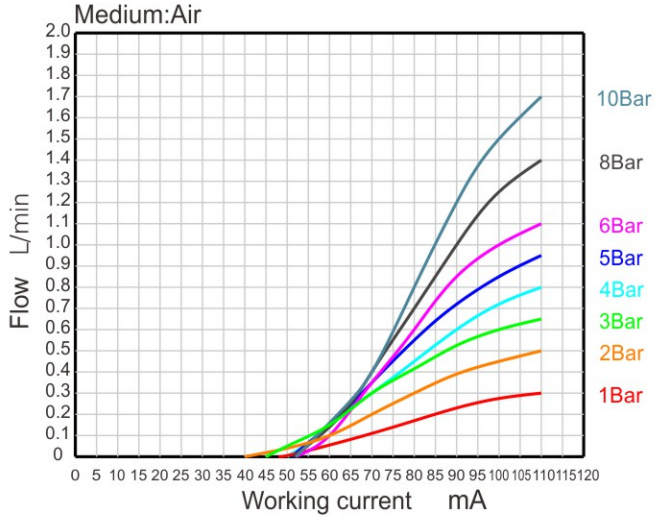

STZF micro proportional solenoid valve

Current flow curve diagram

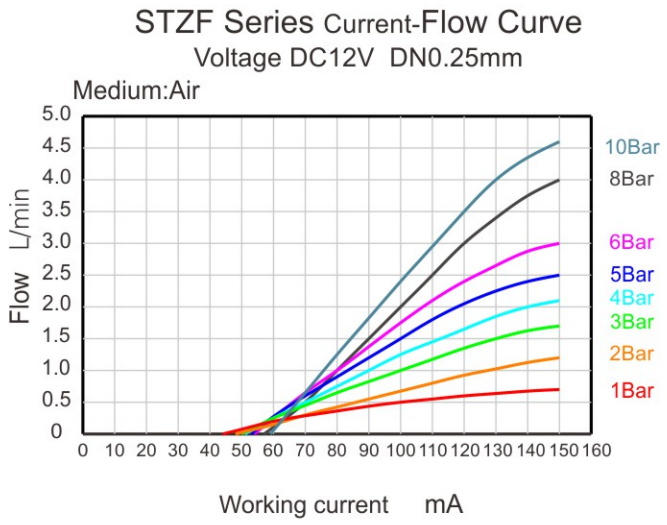

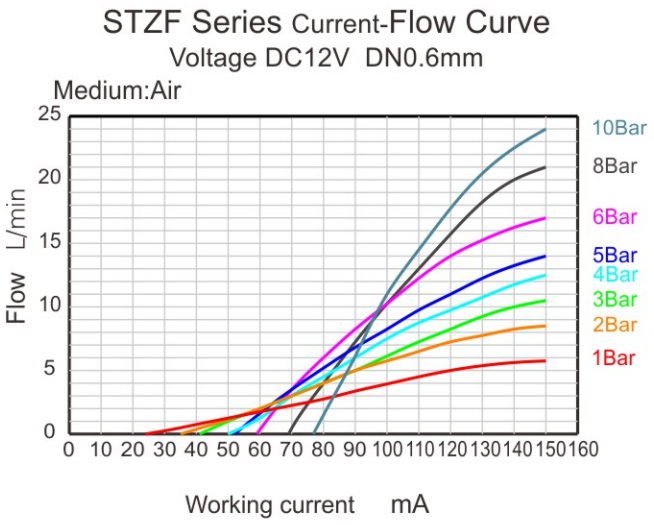

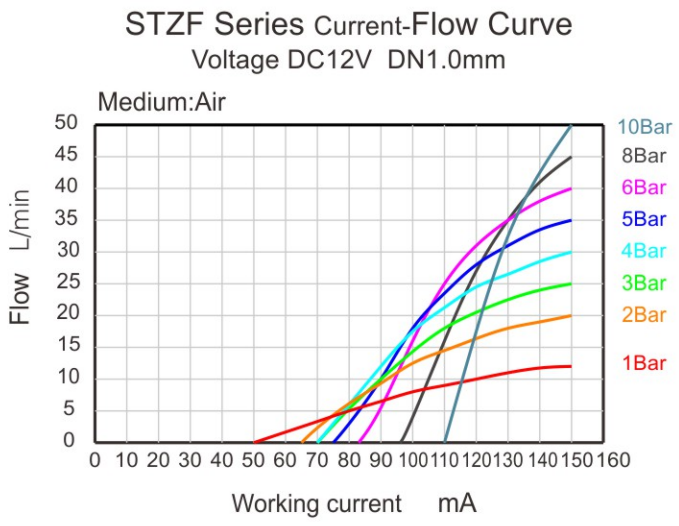

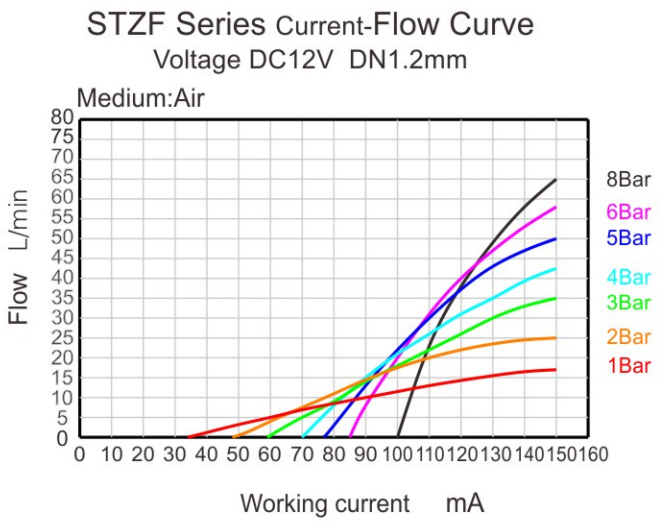

STZF micro proportional solenoid valve

Valve Selection List

Pipe Conn -ection	Orifice mm	CV Factor	Operating pressure differential(bar)		Coil Type	Power		Coil Class	Model Code DC12V	Weight kg
			Min	Max		DC 12V	DC 24V			
F	0.08	0.0003	0	10	W	2	2	H	STZF1WH12V5FC008	0.06
	0.15	0.0007	0	10	W	2	2	H	STZF1WH12V5FC015	0.06
	0.25	0.0025	0	10	W	2	2	H	STZF1WH12V5FC025	0.06
	0.60	0.018	0	10	W	2	2	H	STZF1WH12V5FC06	0.06
	1.0	0.05	0	8	W	2	2	H	STZF1WH12V5F01	0.06
	1.2	0.07	0	8	W	2	2	H	STZF1WH12V5FC1	0.06
1/8”	0.08	0.0003	0	10	W	2	2	H	STZF1WH12V5AC008	0.2
	0.15	0.0007	0	10	W	2	2	H	STZF1WH12V5AC015	0.2
	0.25	0.0025	0	10	W	2	2	H	STZF1WH12V5AC025	0.2
	0.60	0.018	0	10	W	2	2	H	STZF1WH12V5AC06	0.2
	1.0	0.05	0	8	W	2	2	H	STZF1WH12V5A01	0.2
	1.2	0.07	0	8	W	2	2	H	STZF1WH12V5AC1	0.2
1/4”	0.08	0.0003	0	10	W	2	2	H	STZF1WH12V5BC008	0.18
	0.15	0.0007	0	10	W	2	2	H	STZF1WH12V5BC015	0.18
	0.25	0.0025	0	10	W	2	2	H	STZF1WH12V5BC025	0.18
	0.60	0.018	0	10	W	2	2	H	STZF1WH12V5BC06	0.18
	1.0	0.05	0	8	W	2	2	H	STZF1WH12V5B01	0.18
	1.2	0.07	0	8	W	2	2	H	STZF1WH12V5BC1	0.18

STJW proportional solenoid valve

Miniature 2/2 proportional solenoid valve. Flow proportional to coil input. Small, light, low power (2W), low hysteresis (6%), good repeatability (<1%). Ideal for high-precision flow control.



Coil insulation class: F class Coil protection class: IP50
PWM control frequency: PWM frequency≥1000Hz
Working Voltage: DC12V / DC24V Coil Power: 9W
Electrical Connection: 24AWG power cable, 300mm in length
Body Material: SS316
Connection Type: 4-M3 24*24 F(Flat connection)30*30、1/8、1/4
Orifice diameter: 4.0mm
Ambient Temperature: 0℃~50℃
Medium temperature: -5℃~70℃

Solenoid Valves Numbering System for Order

1	2	3	4	5	6	7	8	9	10
Valve Series	Mode of Operation	Coil Type	Coil Class	Voltage	Seal Material	Body Material	Pipe Size	Orifice (ϕ mm)	Options
STJW	**1**	**W**	**H**	**12**	**V**	**5**	**F**	**01**	□
STJW	1: Normally closed	W: Metallic Housing, Lead wires	H= H Class	12=DC12V 13=DC24V	N= NBR E= EPDM V= VITON	5=SS316	F=Flat connection A=1/8 B=1/4	04=4.0	N=NPT P=PT R=RC

External Dimensions

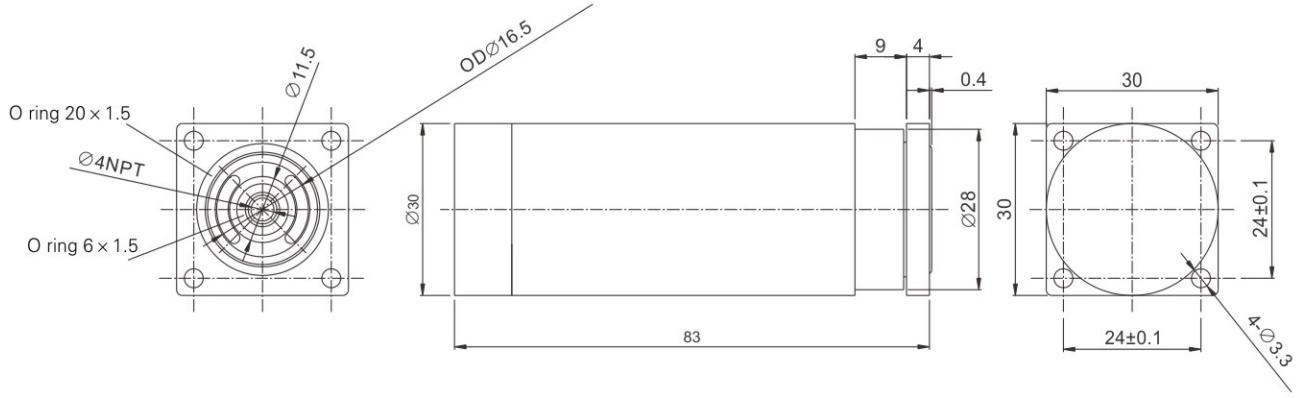

F(Flat connection)

STJW proportional solenoid valve

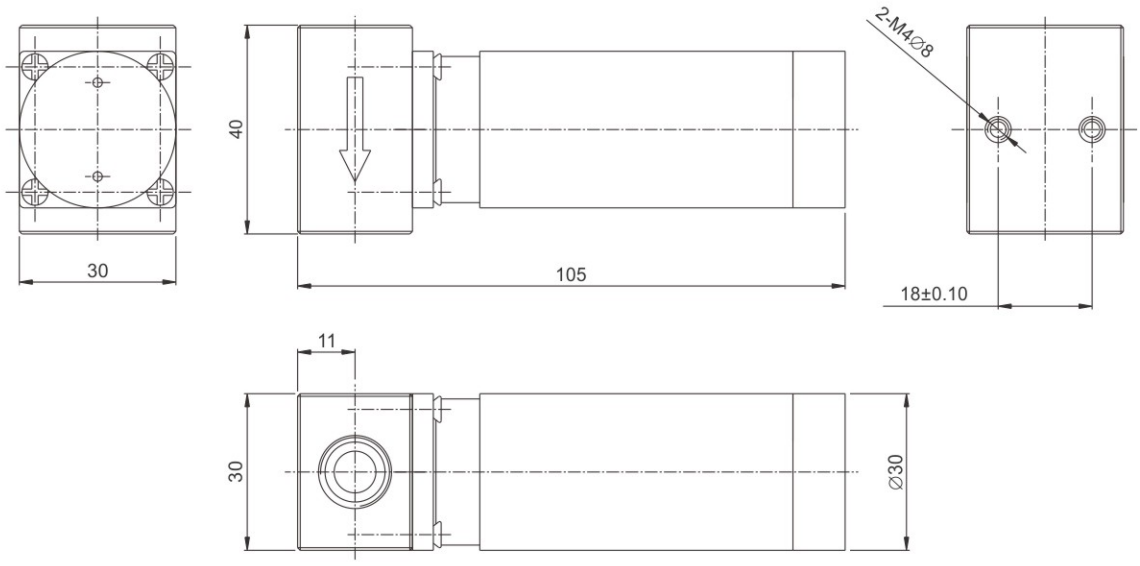

1/8、1/4 Threaded connection

Pressure flow curve diagram

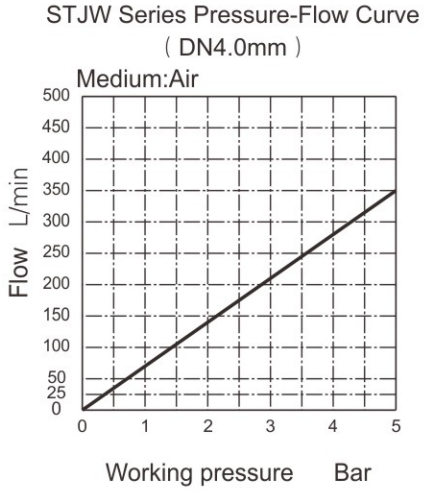

Current flow curve diagram

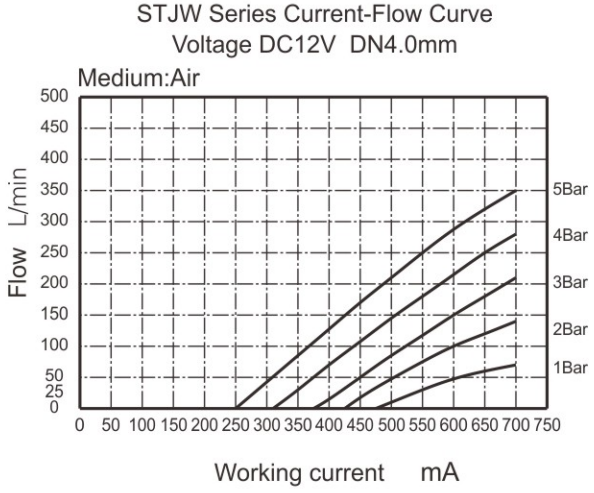

Valve Selection List

Pipe Conn -ection	Orifice mm	CV Factor	Operating pressure differential(bar)		Coil Type	Power W DC12V	Coil Class	Model Code DC12V	Weight kg
			Min	Max					
F	4.0	0.35	0	5	W	9	H	STJW1WH12V5F04	0.35
1/8	4.0	0.35	0	5	W	9	H	STJW1WH12V5A04	0.53
1/4	4.0	0.35	0	5	W	9	H	STJW1WH12V5B04	0.52

SHD 3/2-Way Large Diameter Pilot Operated Solenoid Valve

The SHD Series 3/2–way solenoid valve adopts a pilot–operated structure. Its working principle uses the fluid pressure difference to drive the main valve spool, achieving switching between three ports. It is suitable as an electromagnetic control component for high–pressure, large–flow fluid control systems.

Seal Material: VITON
Body Material: 6061 Aluminum Alloy
Medium: Neutral Gas or Liquid
Medium Temperature: 5–50℃
Ambient Temperature: –20～+60℃
Pressure: 5～40Bar
Voltage: DC48V



Working flow diagram

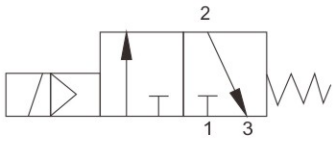

Valve Selection List

Pipe Conn -ection	Orifice mm	CV Factor	Operating pressure differential(kgf/cm²)			Max. fluids Temp. ℃	Power (w)	Model Code DC48V Seal:VITON	Weight kg
			Min	Max					
				Air	Water, liquid				
1	25	12	5	40	40	50	13	SHD3AF17V8G25M	4.6

External Dimensions

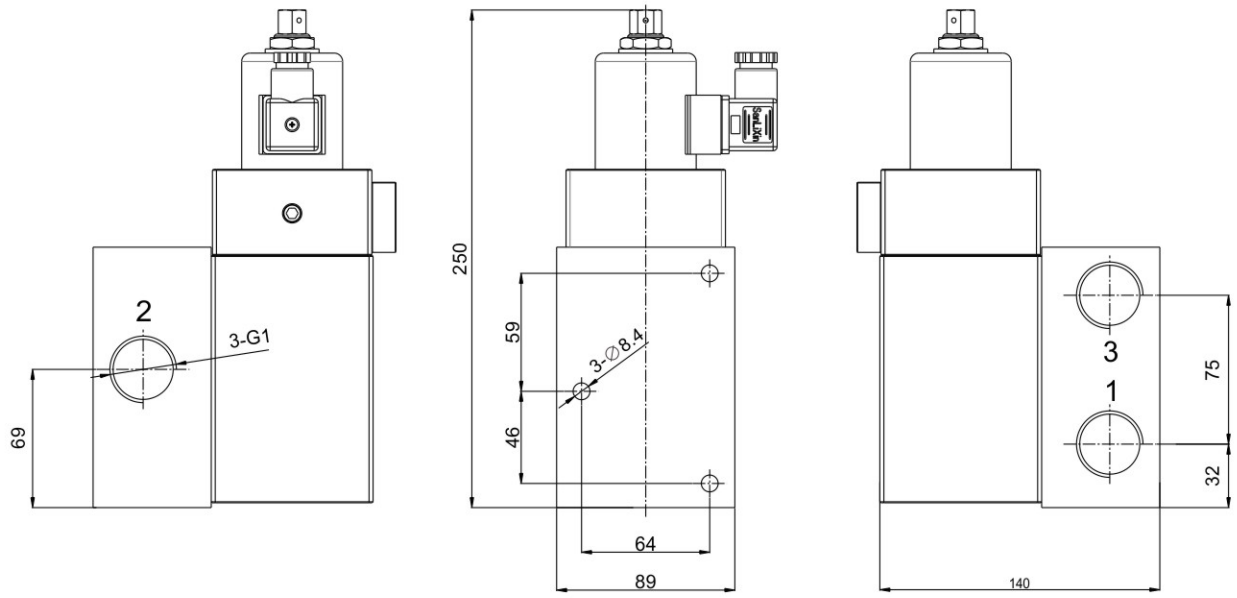

Signal feedback solenoid valve

Solenoid valve add the pressure transmitter can know the valve is open or closed. The voltage shown is linearly proportional to pressure.

1. Measure pressure range: 0-16bar
2. Outlet voltage: 0.5-4.5V
3. Inlet Voltage: DC5V
4. Thread: G1/8
5. Fluid temp: 0~+80℃
6. Media: water、air
7. Connect type: Red lead +5VDC
   Black lead: Public earth line
   Green lead: output 0.5-4.5VDC
8. Accuracy class: ±1% F.S



External Dimensions Chart

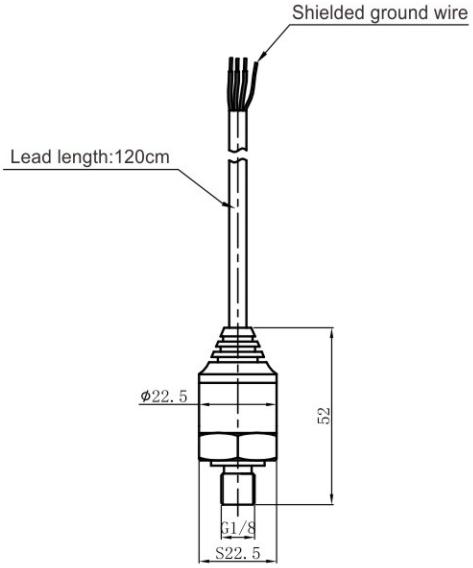

Application



ZS series Solenoid Valve



SLP series Solenoid Valve

Note: Optional solenoid valve, please check the Solenoid valves numbering system for order options item.

Wide voltage coil

1.Voltgae:24-240V
2.AC=DC
3.Smaller than normal coil
4.Prolonged electrification won't reduce the electromagentic force.
5.Low temperaure,longer lifetime.
6.Quick reaction
7.Suit for high(low) temperature solenoid valve.
8.IP65



Coil parameters tables

Coil code: A36-351036						Φ20.3mm			
Voltage	Inrush (VA)	Inrush (mA)	Holding (VA)	Holding (mA)	Voltage	Inrush (VA)	Inrush (mA)	Holding (VA)	Holding (mA)
AC220V	115	545	48	225	DC24V	50	2190	12	480
AC110V	93	800	45	370	DC36V	75	2100	11.5	325
AC48V	45	860	27	510	DC48V	90	1950	11	230
AC36V	34	930	21	580					
AC24V	20	930	15	650					

Coil code: A36-352036						Φ16.3mm			
Voltage	Inrush (VA)	Inrush (mA)	Holding (VA)	Holding (mA)	Voltage	Inrush (VA)	Inrush (mA)	Holding (VA)	Holding (mA)
AC220V	85	385	28	130	DC24V	50	2212	10	410
AC110V	90	815	48	465	DC36V	62	1805	9	250
AC48V	45	890	25	528	DC48V	83	1750	8.5	180
AC36V	30	975	18	565					
AC24V	20	950	13	610					

Coil External Dimensions:

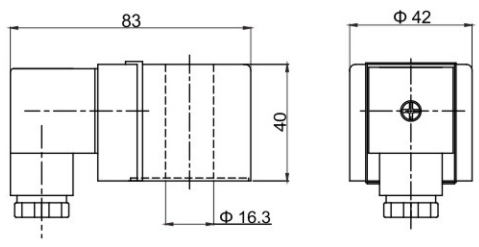

A36-352036

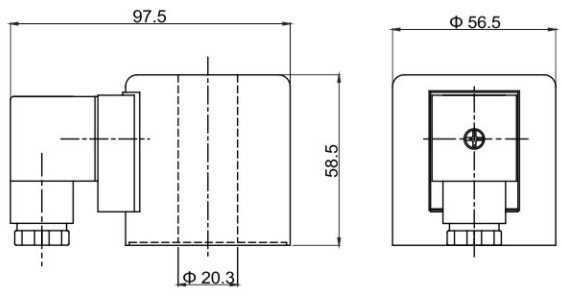

A36-351036

Wide voltage coil

Application









Coil code	Suit for Solenoid Valve
A36-351036	1、ZS–32–50Normally Closed 2、ZS–32–50 Normally Open 3、SLQF–15–40 4、2W–32–50 Normally Closed 5、2W–32–50 Normally Open 6、ZCM–32–50 Normally Closed
A36-352036	1、ZS Small series 2、ZS–15–25 Normally Closed 3、ZS–15–25 Normally Open 4、SLP Small series 5、SLP–15–100 Normally Closed 6、SLP–15–50 Normally Open 7、 SLA–15–50 Normally Closed 8、SLA–15–50 Normally Open 9、2W–15–25 Normally Closed 10、2W–15–25 Normally Open 11、ZCM–15–25 Normally Closed

Flameproof electromagnetic coil

Flameproof coil is all the devices may be lit with explosive gas mixture components enclosed in a shell, the shell can withstand any shell surface or structure clearance, infiltrate into the inside of the shell of combustible mixture in the internal explosion damaged, not caused by an outside and a variety of gas or steam formation of explosive environment to light.



Ambient temp：-20℃~+55℃

Allowable pressure：80~110kpa Relative humidity：≤95%（+25℃）

Voltage：AC220V 、DC24V（Other voltage can ask the company）

Seals：NBR、EPDM、VITON

Flame-proof grade：Ex db IIC T4 Gb/Ex tb IIIC T130℃ Db

Explosion-proof standard：GB/T3836.1-2021、GB/T3836.2-2021。

Temperature lever T4:Safe object surface temperature ≤135℃

It is suitable for other explosive gas environment except coal mine gas and the place containing Ⅱ A, Ⅱ B T1~T4 explosive gas environment zone 1 and 2

Flow as the arrow ,mounts in any position ; best position is solenoid vertical and upright direction

Specifications for thread of cable outlet device:M20x1.5
If the cable protective cover needs to be installed, the certified explosion-proof connector must be used



Parameter

Coil model	XIV-A-220VAC	XIV-B-24VDC
Body Material	Aluminum Alloy	Stainless Steel
Rated voltage	AC220V/50Hz	DC24V
Rated power	27VA	22W

Note: stock voltage:AC220V DC24V. Other voltage can ask the sales of company

External Dimensions

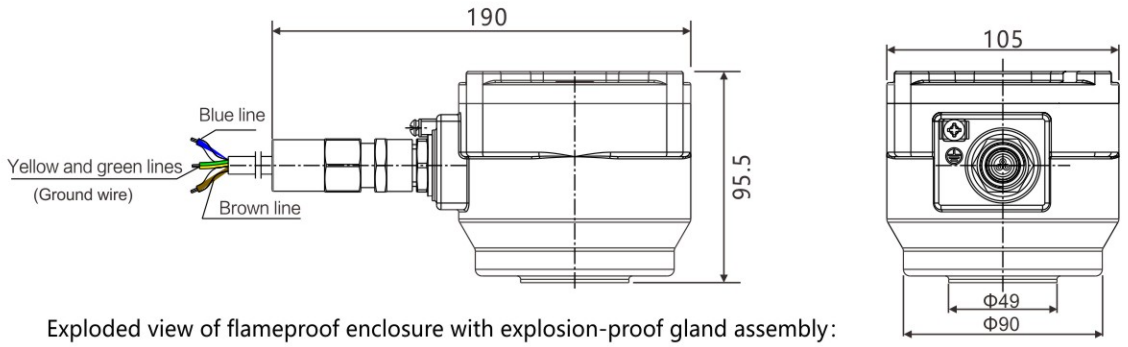

Exploded view of flameproof enclosure with explosion-proof gland assembly:

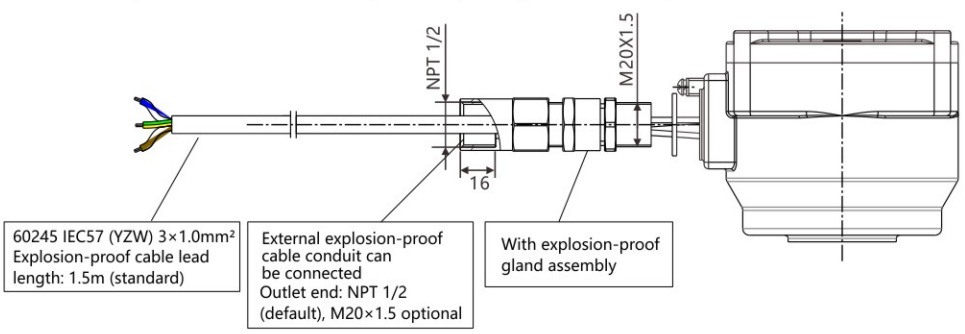

※ Flameproof enclosure and gland assembly are certified as a complete unit. Do not disassemble.

Solenoid Valves Numbering System for Order

	1	2	3	4	5	6	7	8	9	10
	Valve Series	Mode of Operation	Coil Type	Coil Class	Voltage	Seal Material	Body Material	Pipe Size	Orifice (mm)	Options
E.G.	**SLP**	**1**	**D**	**F**	**02**	**N**	**1**	**E**	**20**	☐
	ZS SLP SLA SLG SLT SAV ZKS	1= Normally Closed 2= Normally Open 3= Diverting 4= Universal	G= Flameproof coil	F= IIB Class H= IIC Class	02= AC220V 01= AC110V 03= AC36V 05= AC24V 12= DC12V 13= DC24V Please consult our company for other voltages	N=NBR E=EPDM V=VITON T=PTFE	1=Wrought brass 3=SS316 4=SS304 5=Stainless steel 8= Aluminum 9=Wrought brass	A=1/8" B=1/4" C=3/8" D=1/2" E=3/4" G=1" H=1-1/4" J=1-1/2" K=2" F=Flange Connection	01=1.0 C1=1.2 C2=1.5 02=2.0 C3=2.5 03=3.0 04=4.0 05=5.0 06=6.0 09=9.0 10=10.0 C9=10.5 13=13.0 16=16.0 19=19.0 20=20.0 25=25.0 32=32.0 35=35.0 40=40.0 50=50.0 65=65.0 80=80.0 100=100.0	Blank: Aluminium alloy Flameproof enclosure S: Stainless steel Flameproof enclosure N=NPT M=Manual override

Flameproof electromagnetic



ZS Series



SLP Series



SLA Series

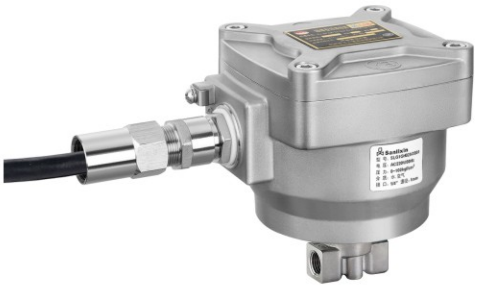

SLG Series



SLT Series



SLT Series



SAV Series



ZKS Series

SLX timer switch device

Analog electronil timer

Working voltage：24-220V AC/DC 50HZ/60HZ
Static electricity：4mA Max
Working temperature：-10℃~+50℃
Protection level：IP65-EN 60529
Keeping voltage：400V Max
Capanty：1A
Instantuneous current：10A for 10ms
Electrify efficiency：100%ED
The life cycle of switch：3×10^8
Time ON: form 0.5 ~10s
Time OFF: form 0.5 ~ 45min
Indicator：yellowLED
TEST
Connection type：DIN43650A



SLX720-1

Digital electronic timer

1：High quality flame retardant plastic shell,high strength and security
2: Microcomputer chip control,powerful, high precision
3: LED digital tube display with night vision fuction.
4: Time adjustment :range:two-way adjustable time switch,
ON time 1Sec ~ 9min59Sec;
OFF time 1Sec ~ 99h59min59Sec
5：Function mode: loop mode (two ways: first on then off or first off then
Single mode (one way: specified time on).
6：Power supply:high-voltage AC/DC 110~240V (XY-3800H)
Low-voltage AC/DC 7~36V(XY-3800L)
7：Protection IP65 When properly installed
8：The standard DIN43650A input and output interfaces.
9：If indicator is light, it is ON state, otherwise it is the OFF state.
10：Field of use: solenoid valve controlling and other similar timing app



SLX3800

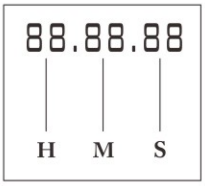

Coil type selection list (1)

Photo	Type	Class	Model No .	Size (mm) L×W×H or dimeter
	D:DIN Standavd comections fully excapsulated	F	ZS Nomally closed Φ4~Φ25 SLP2 Nomally open Φ13~Φ50 SLA Nomally closed/openΦ15~Φ50 SLP Nomally closed Φ65-100	Φ16.3 L×W×H： 54X38.5X40
	N:Lead wires watertight fully Encapsulated	F	ZS Nomally closedΦ4~Φ25 SLP2 Nomally openΦ13~Φ50	Φ16.3 L×W×H： 54X38.5X40
	A:Metallic housing DIN standard	F	ZS Nomally closedΦ4~Φ25 ZCM Φ5~Φ25	Φ16.3 Dimeter：Φ50 H：41mm
	DF:Coils metallic housing DIN standard	H	ZS Nomally openΦ16~Φ25 ZCM Nomally openΦ15~Φ25	Φ15.3 Dimeter：Φ56 H：57.5mm
	D:DIN standard comection fully encapsulated	F	ZS Φ32~50 Nomally closed	Φ20.3 Dimeter：Φ73 H：50mm
	A :Big coils metallic housing DIN standard	F	ZS Φ32~50(Nomally closed/open) ZCM Φ32~Φ50	Φ20.3 Dimeter：Φ68 H：61.5mm
	D:DIN standard connections fully encapsulatd	F	SLP1 Nomally closed Φ3~Φ50 SLP2 Nomally open Φ1~Φ4(body:9) SLV series (body:1&3) SLE series、ZCTΦ3 SLP2 Nomally open Φ2.5~Φ3 ZS Φ10 (body:9) SLT series DMF-Zseries	Φ14.7 LXWXH： 38.5X29X42
	D:DIN standard conreclions encapsulated	F	SLG Φ1~Φ2.5 Nass：Coil	Φ14.7 LXWXH： 44.5X35.5X42
	N:Lead wires water tight fally encapsulated	F	SLP series Φ3~Φ50	Φ14.7 LXWXH： 57X36X42

Coil type selection list (2)

Photo	Type	Class	Model No .	Size (mm) L×W×H or dimeter
	NASS Coil	F H	SLP1 Nomally closed Φ3~Φ50 SLV body1 & 3、SLE ZCT Φ3、SLA Series ZS 1 Nomally closed Φ16~Φ25 SLT Series	Φ14.5 LXWXH： 38.5X29X42
	N05 Coil: Lead Wires	B	SLC5、SLC6 ZS Φ2.5、Φ3	Φ11.2 41.5X30.5X36
	SLC2 Coil	B	SLC1、SLC2 SLC3、SLC4	Φ11.5 Dimeter：Φ31 H：34mm
	W Type (Small Size) Metallic Housing Lead Wires	F	2W025-06、08 SLV 2 &4	Φ13.7 Dimeter：Φ42.5 H：34mm
	W Type(Middle Size) Metallic Housing Lead Wires	F	2W Φ4~Φ25	Φ16.3 Dimeter：Φ50 H：41mm
	W Type(Big Size) Metallic Housing Lead Wires	F	2W Φ32~Φ50	Φ20.3 Dimeter：Φ68 H：61.5mm
	DF Coil (Small Size) Metallic Housing DIN Standard	F	DF Φ15~Φ20 ZCT-6	Φ15.3 Dimeter：Φ48 H：47mm
	DF Coil Metallic Housing	F	DF Φ25~Φ100	Φ15.3 Dimeter：Φ56 H：57.5mm
	ZCZ Coil (Small Size) Metallic Housing DIN Standard	H	ZCT Φ10~Φ15 ZCT Φ15~Φ20	
	ZCZ Coil Metallic Housing DIN Standard	H	ZCZ Φ25~Φ50	Φ18.5 Dimeter：Φ56 H：57.5mm

Coil type selection list (3)

Photo	Type	Class	Model No .	Size (mm) L×W×H or dimeter
	D:DIN standard connections fully encapsulated	H	SLM Series	Φ10 LxWxH：28.5x21.5x29.5
	W :Metallic housing led wires	H	SLAΦ15~Φ50 Steaw series	Φ16.3 Dimeter：Φ50 H：41mm
	ZQDF 15 Coil: metallic housing DIN standard	H	ZQDF Φ15~Φ20 DF Φ125~Φ150	Φ20.5 Dimeter：Φ77 H：84mm
	ZQDF 25 Coil: metallic housing DIN standard	H	ZQDF Φ25~Φ50 ZS Φ65~Φ100	Φ25.8 Dimeter：Φ85 H：93mm
	SLDF25 Coil:undertwltuater coil lead wires:90cm	F	SLDF Series ≤Φ25 SLDFΦ32~Φ50 (DC) SLDF ≥Φ65	Φ16.3 Dimeter：Φ48.7 H：43.5mm
	SLDF50 Coil:undertwltuater coil lead wires:90cm	F	SLDFΦ32~Φ50	Φ21 Dimeter：Φ63(AC) H：55.5mm
	SLPM	B	SLPM Series	M19X1.25 Dimeter：Φ30 H：31mm
	SLPM	F	SLPM Series	Φ14.7 LXWXH： 41.5X30.5X36
	D:DIN standard connections fully encapsulated	F	SLZ Series	Φ14.6 LXWXH： 54X41X44

Coil type selection list (4)

Photo	Type	Class	Model No .	Size (mm) L×W×H or dimeter
	A Type(Big Size) Metallic Housing DIN Standard	H	SLQF–15~25	Φ20.3 Dimeter： Φ68 H：61.5mm
	A Type(Big Size) Metallic Housing DIN Standard	H	SLQF–40–50	Φ25.8 Dimeter： ϕ85 H：70mm
	A Type Metallic Housing DIN Standard Wide voltage coil	F	ZS–15–25 SLP–15–100	Φ16.3(14.5) Dimeter： ϕ42 H：40mm
	A Type(Big Size) Metallic Housing DIN Standard Wide voltage coil	F	ZS–32–50	Φ25.8 Dimeter： ϕ56.5 H：58.5mm
	M : standard connections fully encapsulated	F	SM Series	Φ14.7 LXWXH： 54X39X42. 5
	M : standard connections fully encapsulated	F	SM Series	Φ16. 3 LXWXH： 60X44X38. 4
	X Type:explosion -proof	Exmb I mb/Ex mb IIC T4 Gb NO .: CNEx19.1387X、CNEx19.1386X Coils orifice：Φ16mm Φ20mm Lead wires：1500mm Coils temperatare：<80℃ Ambient temperature：-20~+50℃ Voltage:AC 220V、127V、36V DC 24V The media can hat exceed 60℃		

Solenoid valve selection guide

Sanlixin®
SOLENOID VALVES

Fax:0086-574-62636060

1	Type: 2/2-Way ☐ 3/2-Way ☐
2	Operating Mode: N.O. ☐ N.C. ☐ Universal ☐
3	Coil Class: High Temp.<H Class> ☐ Normally <F Class> ☐ Explosion-proof<X> ☐
4	Coil Voltage: ☐ AC <Frequency> ☐ DC ☐
5	Fluid Media: Air ☐ Gas ☐ Water ☐ Light Oil ☐ Steam ☐ Others ☐ Fluids Temp. ☐
7	Fluid Temp: ☐ ℃
8	Body Material: Forged Brass ☐ Cast Brass ☐ SS304 ☐ SS316 ☐ Others ☐
9	Pressure: Max. Inlet Pressure ☐ Min. Inlet Pressure ☐ If Outlet Pressure Higher then Inlet's ☐
10	Size: Pipe Size (G Connection, NPT US Standard) ☐
11	Orifice ☐ Flow Rate at Available Voltage ☐
12	Ambient: Ambient Temp.: Indoor ☐ Outdoor ☐ Underwater ☐
13	Options: eg. Manual Override
14	Special Request

Company: _____ Contact Person: _____

Tel: _____ Fax: _____

三力信 Sanlixin®

SOLENOID VALVE

Sales Center in Indonesia

三力信 Sanlixin® Sanlixin Indonesia

www.solenoidvalve.cn

Lindeteves Trade Center
- LTC lantai GF2 Blok A23 No 9 JL.Hayam Wuruk No.127 Jakarta Barat
Tel:0062 2156983081
Fax:0062 2156983082
Email: benny@solenoidvalve. cn

VIET GARDEN COMPANY

三力信 Sanlixin® Sanlixin Vietnam

www.solenoidvalve.vn

205 Dao Duy Tu Street, Dien Hong Ward, Ho Chi Minh City, Vietnam
Mobile: 0084-918 099 856
Tel: 0084-8-3957 4060 Ext.112
Fax: 0084-8-3957 4059
Email: info@solenoidvalve. vn

Sales Center in Malaysia

三力信 Sanlixin® Sanlixin Malaysia

www.solenoidvalve.cn

SPLT Consult Re Engrg Svcs Sdn Bhd
38, Jalan Sutera Merah 2, Taman Sutera.
81200 Johor Bahru, Johor DT, Malaysia.
Tel:+607-235 7739 / +6016-733 4120
Fax:+607-241 6268
Email: lenst@solenoidvalve. cn

Sales Center in Spain

三力信 Sanlixin® Sanlixin Spain

www.solenoidvalve.cn

ACCESFLUID
Pol.Ind. L'Ametlla Park
C/SEVA 2 Ametlla Del Valles. L
08480 BCN SPAIN
TEL. +34 937 811 612
Email: carlos@solenoidvalve.cn

Sales Center in Mexico

三力信 Sanlixin® Sanlixin Mexico

www.solenoidvalve.cn

Cipres 280 Street, Orange Building
406, Colonia Atalmpa, Municipality Cuahutemoc,
Cp. 06450, City Of Mexico, Mexico Country.
Mobile Phone: +52 5564765558.
Office Phone: 01 52 5562851881
Ing. Jesus Soberanes Perez
soberanesjesus@solenoidvalve.cn

Sales Center in UK

三力信 Sanlixin® Sanlixin UK

www.aircoproducts.co.uk

AIRCO PRODUCTS LIMITED
Unit 10 Stafford Park 12
Telford
Shropshire
TF3 3BJ
Telephone: 01952 200120
Email: sales@aircoproducts.co.uk

Sales Center in USA

GC VALVES A DEMA COMPANY

www.gcvalves.com

America General Agent: GC VALVES
4525 E. Industrial St. Unit 4C
Simi Valley, CA 93063
Ph. 800-582-4232
Fx .582-582-0210

Sales Center in France

ELV solenoid valve
Technologies.eicomposants the.miques

www.cbm.fr

3 Rue Jules Verne
Parc d' Activités Airspace33187 LE HAILLAN Cedex
Tél. 33 (0)5 56 08 62 59
Fax. 33 (0)5 56 42 58 15
info@cbm.fr

Sales Center in Poland

A+ TECH

www.aplustech.pl

A+ TECH Sp. z o.o.
ul. Warzelnicza 27A,
03-255 Warsaw,
Poland
Tel./Fax.+48 22 811 5080
Mobile. +48 602 862 125
+48 694 082 868
E-mail.biuro@aplustech.pl

YUYAO SANLIXIN SOLENOID VALVE CO.,LTD.

Add: No. 59 Fangye Road, Yuyao, Zhejiang,China
Tel: + 86 - 574 - 62640822 62636060 62559181
Fax: + 86 - 574 - 62636060 P.C.: 315400
Http: // www.solenoidvalve.cn www.sanlixin.com
E-mail: sanlixin@solenoidvalve.cn

YUYAO SANLIXIN SOLENOID VALVE CO.,LTD.